CITY OF TEXARKANA

CITY COUNCIL

MINUTES ● MAY 27, 2014

Council Chambers | **Regular Meeting** | **6:00 PM**

220 TEXAS BLVD.
TEXARKANA, TX 75501

I. CALL TO ORDER, ROLL CALL, ESTABLISHMENT OF QUORUM

Attendee Name	Title	Status	Arrived
Bob Bruggeman	Mayor	Present	
Brad Casteel	Ward 1	Present	
Willie Ray	Ward 2	Present	
Tina Veal-Gooch	Ward 3	Absent	
Brian Matthews	Ward 4	Present	
Bill Miller	Ward 5	Present	
Josh Davis	Ward 6	Present	

Mayor Bruggeman announced that Councilmember Veal-Gooch was not at tonight's meeting due to work related matters.

Staff Present: City Manager John Whitson, Jennifer Evans, Jim Powell, Charlie Bassett, Holly Wall, Craig Hicks, Lisa Thompson, Pam Burns, J.D. Phillips, Bill King, Charles Kreidler, Dan Shiner, Cody Harris, Shirley Jaster, Kyle Dooley, Craig Lindholm, Sherry Jackson Hawkins, Gary Smith, John Murphy, and Jerry Sparks.

Legal Counsel: None

II. INVOCATION AND PLEDGE BY COUNCILMEMBER BRAD CASTEEL

Swearing In Ceremony for Unopposed Councilmember Candidates

Mayor: Mr. Bob Bruggeman
Councilmember Ward 1: Mr. Brad Casteel
Councilmember Ward 4: Dr. Brian Matthews
Councilmember Ward 6: Mr. Josh Davis

City Council Swearing In Ceremony

Mayor Bruggeman thanked the citizens, the city council members for their cooperation, the City Manager and all city staff for the honor and privilege to serve as Mayor of Texarkana, Texas.

Councilmember Casteel thanked the citizens for their support in his service as Texarkana, Texas' Ward 1 representative.

Councilmember Matthews expressed appreciation for his honor and privilege to serve as Texarkana, Texas' Ward 4 representative. Councilmember Matthews also said he has developed great friendships among fellow council members.

Councilmember Davis shared his gratitude and joy for being able to serve the citizens as Texarkana, Texas' Ward 6 representative. Councilmember Davis said he has learned so much and it truly has been a pleasure.

III. MAYOR'S OPENING REMARKS

Upcoming City Council Meetings:

Monday, June 9, 2014 at 6:00 p.m.
Monday, June 23, 2014 at 6:00 p.m.
Monday, July 14, 2014 at 6:00 p.m.
Monday, July 28, 2014 at 6:00 p.m.

Park & Recreation Events:

Thursday, May 29th - Spring Lake Park - Movie - "Cloudy With a Chance of Meatballs 2"
Saturday, May 31st - Spring Lake Park - Arley Smith Memorial Criterium (Bike Race)
Thursday, June 5th - Spring Lake Park - Movie - "Despicable Me 2
Saturday, June 7th - Spring Lake Park - Paws for a Cause 5K Run
Saturday, June 7th - Wallace Park - Softball Tournament

Farmer's Market at 305 Texas Blvd. (Tue., Thurs., & Sat. 7:00 a.m. until sold out)

Market Events:

Saturday, May 31st - Celebrating Northeast Texas Wine Day
Saturday, June 7th - Farm Fresh Cooking Series
Saturday, June 14th - The Second Annual Green Tomato Day

Information and Presentation

Mayor Bruggeman mentioned that several activities were held throughout the Memorial Day weekend in Texarkana and hoped that all citizens enjoyed the weekend.

Mayor Bruggeman invited everyone to welcome the attendees for the Arkansas Master Gardner's Convention that will be held at the Texarkana Convention Center on May 29 and May 30.

May KTB Awards Presentation for Residential and Business of the Month

Mayor Bruggeman and Councilmembers Willie Ray and Josh Davis presented.

Residential recipients: James and Denise Petersen - 3115 Pine Street. Mrs. Petersen said it was an honor to receive this award.
Business recipient: Dr. Brent Carmony - 5305 Cowhorn Creek Road. Hannah Crider thanked the City for this award.

Mayor Bruggeman recognized members of Keep Texarkana Beautiful in the audience.

Appointments to Boards & Commissions

None.

City Council Member Appointments Annual Review

This item was moved to the June 9, 2014 council meeting.

IV. OPEN FORUM: COMMENTS FROM THE PUBLIC (LIMIT 5 MINUTES EACH)

Julie Ray Harrison, of Partnership for the Pathways, addressed Council in favor of Resolution No. 2014-059 regarding support for Leadership Texarkana and not in favor of Resolution No. 2014-052 regarding the proposed Richmond Road digital billboard.

Brent Freeman, of Freeman Landscape, addressed Council in favor of Resolution No. 2014-069 regarding amending the zoning in Area 8 of the University Planned Development District.

James Thayron addressed Council for support of redeveloping the Beverly Heights area.

Carolyn Young addressed Council for support of redeveloping the Beverly Heights area and requested more police presence in this neighborhood.

George Dodson, of Fairway Outdoor Advertising, addressed Council not in favor of Resolution No. 2014-052 regarding the proposed Richmond Road digital billboard.

V. ITEMS FOR CONSIDERATION

Consent Items

(6:38 p.m.)

RESULT:	**ADOPTED [UNANIMOUS]**
MOVER:	Bill Miller, Ward 5
SECONDER:	Brian Matthews, Ward 4
AYES:	Casteel, Ray, Matthews, Miller, Davis
ABSENT:	Veal-Gooch
EXCUSED:	Bruggeman

1. Consider approval of the minutes of the Regular Meeting of the City Council held on May 12, 2014 at 6:00 PM.

2. Resolution No. 2014-042 accepting a bid and authorizing the City Manager to enter into a contract for the construction of Phase IV TAMU East Approach.

   Public Hearing: April 28, 2014
   Second Briefing: May 12, 2014
   Council Vote: May 27, 2014

3. Ordinance No. 2014-048 amending Chapter 15, Offenses and Miscellaneous Provisions; of the Texarkana City Code by Prohibiting the sale to a minor of electronic Cigarettes and/or liquid nicotine and prohibiting self-service merchandising.

   Public Hearing: April 28, 2014
   Second Briefing: May 12, 2014
   Council Vote: May 27, 2014

4. Resolution No. 2014-061 consenting to the sale of airport timber.

   Public Hearing:
   Second Briefing:
   Council Vote: May 27, 2014

Action Items

5. Public Hearing and consider Ordinance No. 2014-055 authorizing the City Manager to execute the Third Addendum to Declaration of Gift Agreement between the City of Texarkana, Texas and the Board of Regents of The Texas A&M University System to revise and amend certain obligations remaining under the "Declaration of Gift Agreement" executed November 7, 2005 as amended by the" First and Second Declaration of Gift Agreement" executed February 11, 2011 and providing for a limited funding in the amount of $235,000, payable to Texas A&M University - Texarkana.

   Public Hearing: May 27, 2014
   Second Briefing:
   Council Vote: May 27, 2014

   (6:40 p.m.)

RESULT:	**ADOPTED [UNANIMOUS]**
MOVER:	Bill Miller, Ward 5
SECONDER:	Josh Davis, Ward 6
AYES:	Casteel, Ray, Matthews, Miller, Davis
ABSENT:	Veal-Gooch
EXCUSED:	Bruggeman

6. Resolution No. 2014-071 appointing a Mayor Pro Tem for the term beginning June 1, 2014 and ending on May 31, 2015 or until superseded by new council member appointments.

Public Hearing:
Second Briefing:
Council Vote: May 27, 2014

Council agreed to appoint Councilmember Tina Veal-Gooch as Mayor Pro Tem for the specified period.
(6:42 p.m.)

RESULT:	**ADOPTED [UNANIMOUS]**
MOVER:	Brian Matthews, Ward 4
SECONDER:	Bill Miller, Ward 5
AYES:	Casteel, Ray, Matthews, Miller, Davis
ABSENT:	Veal-Gooch
EXCUSED:	Bruggeman

VI. FIRST BRIEFINGS

1. Resolution No. 2014-056 approving and adopting the Property Policy Manual.

Public Hearing: June 9, 2014
Second Briefing:
Council Vote: June 23, 2014

Charlie Bassett briefed this item. City Manager Whitson spoke to this item.

RESULT:	**MOVED FORWARD**	**Next: 6/9/2014 6:00 PM**

2. Resolution No. 2014-060 adopting the 2014 HUD Program Year City of Texarkana Community Development Block Grant Action Plan.

Public Hearing: June 9, 2014
Second Briefing: June 23, 2014
Council Vote: July 14, 2014

Craig Lindholm briefed this item.

RESULT:	**MOVED FORWARD**	**Next: 6/9/2014 6:00 PM**

3. Resolution No. 2014-064 approving an application from Pecan Point Brewing Co. at 213 Main Street for a loan from the Facade Revolving Loan Fund Program with funds from the Economic Development Fund.

Public Hearing: June 9, 2014
Second Briefing: June 23, 2014
Council Vote: July 14, 2014

Jerry Sparks briefed this item.

RESULT:	**MOVED FORWARD**	**Next: 6/9/2014 6:00 PM**

4. Ordinance No. 2014-066 approving and authorizing the reclassification of one Police Lieutenant position to a Police Sergeant position and authorizing assignment pay for the Police Department Chief of Staff.

   Public Hearing: June 9, 2014
   Second Briefing: June 23, 2014
   Council Vote: July 14, 2014

   Dan Shiner briefed this item.

RESULT:	**MOVED FORWARD**	**Next: 6/9/2014 6:00 PM**

5. Ordinance No. 2014-068 rezoning Lots 12-20, Block 1, Bellview Addition, located in the 3000 block of Lincoln Avenue. Single Family-2 to General Retail. Texarkana ISD, owner. David Williams, MTG Engineering, agent.

   Public Hearing: June 9, 2014
   Second Briefing: June 23, 2014
   Council Vote: July 14, 2014

   David Williams, of MTG Engineers & Surveyors, briefed this item.

RESULT:	**MOVED FORWARD**	**Next: 6/9/2014 6:00 PM**

6. Ordinance No. 2014-069 amending the University Planned Development District (UPDD) of the Zoning Ordinance to amend allowed uses in Area 8 along Richmond Road by adding the use of a landscape maintenance business with outdoor display sales and equipment. Jerry Clanton, owner. Andrea Freeman, agent. (Due to Planning and Zoning Commission denial, a 3/4 vote by the City Council is required to approve this request).

   Public Hearing: June 9, 2014
   Second Briefing: June 23, 2014
   Council Vote: July 14, 2014

   Andrea Freeman spoke to this item. Shirley Jaster briefed this item.

RESULT:	**MOVED FORWARD**	**Next: 6/9/2014 6:00 PM**

7. Resolution No. 2014-070 authorizing the City Manager to accept the bid and enter into a contract with Rorie Stone Construction, LLC of Texarkana, Texas, in an amount not to exceed $124,337.25 for the N. Kings Highway 12" Water Main Extension Project.

Public Hearing: June 9, 2014
Second Briefing: June 23, 2014
Council Vote: July 14, 2014

Bill King briefed this item.

RESULT:	**MOVED FORWARD**	**Next: 6/9/2014 6:00 PM**

VII. PUBLIC HEARINGS

1. Ordinance No. 2014-054 prohibiting the wearing of pants below the waist inappropriately exposing skin or undergarments (i.e., sagging).

   Public Hearing: May 27, 2014
   Second Briefing: June 9, 2014
   Council Vote: June 23, 2014

   Councilmember Casteel spoke in support of this proposed ordinance. Councilmember Ray spoke in opposition of this proposed ordinance. Mary Bruce suggested incorporating this proposed ordinance into the definition of "indecent exposure".

RESULT:	**MOVED FORWARD**	**Next: 6/9/2014 6:00 PM**

2. Resolution No. 2014-057 authorizing the City Manager to purchase one (1) Vac-Con PD Combination Unit for Texarkana Water Utilities in an amount not to exceed $309,770.20.

   Public Hearing: May 27, 2014
   Second Briefing: June 9, 2014
   Council Vote: June 23, 2014

   No one spoke at this public hearing.
   (8:02 p.m.)

RESULT:	**ADOPTED [UNANIMOUS]**
MOVER:	Brian Matthews, Ward 4
SECONDER:	Josh Davis, Ward 6
AYES:	Casteel, Ray, Matthews, Miller, Davis
ABSENT:	Veal-Gooch
EXCUSED:	Bruggeman

3. Resolution No. 2014-058 authorizing the City Manager to purchase a Sprinter Cargo Van equipped with an Rovver X Truck Camera System for the Texarkana Water Utilities in an amount not to exceed $164,995.00 with the Texarkana, Texas portion not to exceed $102,610.39.

Public Hearing: May 27, 2014
Second Briefing: June 9, 2014
Council Vote: June 23, 2014

No one spoke at this public hearing.
(8:06 p.m.)

RESULT:	**ADOPTED [UNANIMOUS]**
MOVER:	Brian Matthews, Ward 4
SECONDER:	Bill Miller, Ward 5
AYES:	Casteel, Ray, Matthews, Miller, Davis
ABSENT:	Veal-Gooch
EXCUSED:	Bruggeman

4. Resolution No. 2014-059 recognizing Leadership Texarkana and their effort to document the Community's Vision and Values supporting Texarkana USA.

Public Hearing: May 27, 2014
Second Briefing: June 9, 2014
Council Vote: June 23, 2014

Ruth Ellen Whit spoke at this public hearing.
(8:13 p.m.)

RESULT:	**ADOPTED [UNANIMOUS]**
MOVER:	Josh Davis, Ward 6
SECONDER:	Willie Ray, Ward 2
AYES:	Casteel, Ray, Matthews, Miller, Davis
ABSENT:	Veal-Gooch
EXCUSED:	Bruggeman

5. Resolution No. 2014-063 authorizing the City Manager to execute a contract for the exterior and interior repainting of the I-30 and Liberty Eylau elevated storage tanks and the interior of the Wright Patman Water Treatment Plant backwash tank with Utility Service Co., Inc. of Perry, Georgia in an amount not to exceed $1,018,850.

Public Hearing: May 27, 2014
Second Briefing: June 9, 2014
Council Vote: June 23, 2014

No one spoke at this public hearing.
(8:15 p.m.)

RESULT:	**ADOPTED [UNANIMOUS]**
MOVER:	Brian Matthews, Ward 4
SECONDER:	Willie Ray, Ward 2
AYES:	Casteel, Ray, Matthews, Miller, Davis
ABSENT:	Veal-Gooch
EXCUSED:	Bruggeman

VIII. SECOND BRIEFING WITH UPDATES

1. Ordinance No. 2014-050 amending Chapter 13 Motor Vehicles and Traffic of the Code of Ordinances regulating the parking of vehicles in front yards of residential structures.

   Public Hearing: May 12, 2014
   Second Briefing: June 9, 2014
   Council Vote: June 23, 2014

   Shirley Jaster briefed the Council with updated information. Councilmember Miller suggested more clarification of the language used in the ordinance. Ms. Jaster said she would incorporate Councilmember Miller's recommendations and present to Council at the next meeting.

RESULT:	**MOVED FORWARD**	**Next: 6/9/2014 6:00 PM**

2. Ordinance No. 2014-052 granting a Specific Use Permit to allow the location of a CEVMS (digital) billboard on a part of Tract 18, George Brinlee HRS, A-18, located at 2506 Richmond Road. Mark Liepman, owner. Chad Shipp, Shipp Outdoor, LLC, agent. (Due to Planning and Zoning Commission denial, a 3/4 vote by the City Council is required to approve this request). Or Consider Resolution No. 2014-052 to direct the Planning and Zoning Commission to develop and recommend additional regulations for off premise advertising signs(Billboards) in accordance with the Texas Department of Transportation (TxDOT) rules.

   Public Hearing: May 12, 2014
   Second Briefing: May 27, 2014
   Council Vote: June 9, 2014

   City Manager Whitson updated Council with more information.

RESULT:	**MOVED FORWARD**	**Next: 6/9/2014 6:00 PM**

IX. SECOND BRIEFING WITHOUT UPDATES

1. Ordinance No. 2014-051 granting a Specific Use Permit to allow the one additional use of a tattoo studio on the east 75' of Lots 1-3, C.E. Huckabee's Garden Addition, located at 1002 Westlawn Drive. Ronald Griffith, owner. Eric McIntyre, applicant.

Public Hearing:	May 12, 2014
Second Briefing:	May 27, 2014
Council Vote:	June 9, 2014

Jessie McIntyre spoke to this item.

RESULT:	**MOVED FORWARD**	**Next: 6/9/2014 6:00 PM**

X. ITEMS FOR DISCUSSION

Staff Updates

None.

XI. ADMINISTRATIVE COMMENTS

1. Council

   Councilmember Miller commended Parks and Recreation staff for the great job done in cleaning, maintaining and getting city parks ready for summer use. Mayor Bruggeman also thanked the Parks and Recreation staff.

   City Manager Whitson announced that Parks and Recreation Director, Robby Robertson, is also responsible for all building maintenance for the City.

2. Staff

   None.

XII. ADJOURNMENT

Motion to Adjourn

A motion was made to adjourn the meeting.
(9:08 p.m.)

RESULT:	**ADOPTED [UNANIMOUS]**
MOVER:	Brian Matthews, Ward 4
SECONDER:	Willie Ray, Ward 2
AYES:	Casteel, Ray, Matthews, Miller, Davis
ABSENT:	Veal-Gooch
EXCUSED:	Bruggeman

Jennifer Evans
City Secretary

Bob Bruggeman
Mayor

Version: E

Briefing Sheet

Update Date: 5/20/2014 8:39 AM

Lead Department: City Secretary **Action Officer:** Jennifer Evans, City Secretary

Subject: City Council Swearing In Ceremony

Updates/History of Briefing:

NOT APPLICABLE

Executive Summary and Background Information:

Potential Options:

- None
-

Fiscal Implications:

Staff Recommendation:

Advisory Board/Committee Review:

NONE

Board/Committee Recommendation:

NOT APPLICABLE

Advisory Board/Committee Meeting Date and Minutes:

NOT APPLICABLE

Attachments

a. Goals and Perspectives (DOCX)
b. Oath of Office 2014 (M, W1,W4,W6) (PDF)
c. Stmt. of Officer 2014 (M, W1,W4,W6) (PDF)
d. Cert. of Election 2014 (M,W1,W4,W6) (PDF)
e. Ordinance No. 2014-039 (Cancelling Election) (PDF)

City of Texarkana, Texas

Developing Perspectives and Goals Pending Approval by the City Council:

Perspectives	Goals
Serve the Community	☐ Promote an Environmentally Sensitive & Livable Community ☐ Provide a Safe Community ☑ Deliver Quality Services ☐ Foster a Healthy Community
Run the Operations	☐ Enhance Community Preparedness & Responsiveness ☐ Maximize Partnership Opportunities ☐ Provide Courteous & Responsive Customer Service ☑ Model a Positive City Image ☐ Deliver Efficient Services ☐ Cultivate Community Involvement & Access
Manage the Resources	☐ Maintain Fiscal Strength ☐ Maximize Utilization & Resources ☐ Invest in Infrastructure & Transportation
Develop Personnel	☐ Develop a Skilled & Diverse Workforce ☐ Create a Positive & Rewarding Work Culture

Perspectives and Goals Additional Comments:

NONE

Resource Impact:

Staff time required if item is approved:	Select One By Clicking Here

Other Potential Impacts:

NONE APPLICABLE

Public Information Plan:

☐	Newspaper Notice (Required by Statute)	☐	Public Hearing (Required by Statute)
☐	Public Forum/Input Session	☐	Press Release
☐	E-News Distribution	☐	Website Notice
☐	Social Media (Twitter, Facebook, etc.)	☐	Special Mailing
☐	Flyers Posted	☐	Banners Posted
☐	Survey	☐	Automated Phone Call
☑	None Required	☐	

Other:

Attachment: Goals and Perspectives (1112 : City Council Swearing In Ceremony)

Form #2204 Rev. 10/2011

Submit to:
SECRETARY OF STATE
Government Filings Section
P O Box 12887
Austin, TX 78711-2887
512-463-6334

Filing Fee: None

This space reserved for office use

OATH OF OFFICE

IN THE NAME AND BY THE AUTHORITY OF THE STATE OF TEXAS,
I, Bob Bruggeman, do solemnly swear (or affirm), that I will faithfully execute the duties of the office of Mayor of the State of Texas, and will to the best of my ability preserve, protect, and defend the Constitution and laws of the United States and of this State, so help me God.

Signature of Officer

State of Texas)
County of Bowie)

Sworn to and subscribed before me this 27th day of May, 2014.

(seal)

Signature of Notary Public or Other Officer Administering Oath
Judge Sherry Jackson
Printed or Typed Name

Attachment: Oath of Office 2014 (M, W1,W4,W6) (1112 : City Council Swearing In Ceremony)

Form #2204 Rev. 10/2011

Submit to:
SECRETARY OF STATE
Government Filings Section
P O Box 12887
Austin, TX 78711-2887
512-463-6334

Filing Fee: None

This space reserved for office use

OATH OF OFFICE

IN THE NAME AND BY THE AUTHORITY OF THE STATE OF TEXAS,
I, Bradfield Casteel, do solemnly swear (or affirm), that I will faithfully execute the duties of the office of Councilmember Ward 1 of the State of Texas, and will to the best of my ability preserve, protect, and defend the Constitution and laws of the United States and of this State, so help me God.

Signature of Officer

State of Texas)
County of Bowie)

Sworn to and subscribed before me this 27th day of May, 2014.

(seal)

Signature of Notary Public or Other Officer Administering Oath
Judge Sherry Jackson
Printed or Typed Name

Attachment: Oath of Office 2014 (M, W1,W4,W6) (1112 : City Council Swearing In Ceremony)

Form #2204 Rev. 10/2011

Submit to:
SECRETARY OF STATE
Government Filings Section
P O Box 12887
Austin, TX 78711-2887
512-463-6334

Filing Fee: None

This space reserved for office use

OATH OF OFFICE

IN THE NAME AND BY THE AUTHORITY OF THE STATE OF TEXAS,
I, Dr. Brian Matthews, do solemnly swear (or affirm), that I will faithfully execute the duties of the office of Councilmember Ward 4 of the State of Texas, and will to the best of my ability preserve, protect, and defend the Constitution and laws of the United States and of this State, so help me God.

Signature of Officer

State of Texas)
County of Bowie)

Sworn to and subscribed before me this 27th day of May, 2014.

(seal)

Signature of Notary Public or Other Officer Administering Oath
Judge Sherry Jackson
Printed or Typed Name

Attachment: Oath of Office 2014 (M, W1,W4,W6) (1112 : City Council Swearing In Ceremony)

Form #2204 Rev. 10/2011

Submit to:
SECRETARY OF STATE
Government Filings Section
P O Box 12887
Austin, TX 78711-2887
512-463-6334

Filing Fee: None

This space reserved for office use

OATH OF OFFICE

IN THE NAME AND BY THE AUTHORITY OF THE STATE OF TEXAS,
I, Josh Davis, do solemnly swear (or affirm), that I will faithfully execute the duties of the office of Councilmember Ward 6 of the State of Texas, and will to the best of my ability preserve, protect, and defend the Constitution and laws of the United States and of this State, so help me God.

Signature of Officer

State of Texas)
County of Bowie)

Sworn to and subscribed before me this 27th day of May, 2014.

(seal)

Signature of Notary Public or Other Officer Administering Oath
Judge Sherry Jackson
Printed or Typed Name

Attachment: Oath of Office 2014 (M, W1,W4,W6) (1112 : City Council Swearing In Ceremony)

Form #2201 Rev. 10/2011

Submit to:
SECRETARY OF STATE
Government Filings Section
P O Box 12887
Austin, TX 78711-2887
512-463-6334
512-463-5569 - Fax
Filing Fee: None

This space reserved for office use

STATEMENT OF OFFICER

Statement

I, Bob Bruggeman, do solemnly swear (or affirm) that I have not directly or indirectly paid, offered, promised to pay, contributed, or promised to contribute any money or thing of value, or promised any public office or employment for the giving or withholding of a vote at the election at which I was elected or as a reward to secure my appointment or confirmation, whichever the case may be, so help me God.

Position to Which Elected/Appointed: Mayor

City and/or County: Texarkana/Bowie

Execution

Under penalties of perjury, I declare that I have read the foregoing statement and that the facts stated therein are true.

Date: May 27, 2014

Signature of Officer

Revised 10/2011

Attachment: Stmt. of Officer 2014 (M, W1,W4,W6) (1112 : City Council Swearing In Ceremony)

Form #2201 Rev. 10/2011

Submit to:
SECRETARY OF STATE
Government Filings Section
P O Box 12887
Austin, TX 78711-2887
512-463-6334
512-463-5569 - Fax
Filing Fee: None

This space reserved for office use

STATEMENT OF OFFICER

Statement

I, Bradfield Casteel, do solemnly swear (or affirm) that I have not directly or indirectly paid, offered, promised to pay, contributed, or promised to contribute any money or thing of value, or promised any public office or employment for the giving or withholding of a vote at the election at which I was elected or as a reward to secure my appointment or confirmation, whichever the case may be, so help me God.

Position to Which Elected/Appointed: Councilmember Ward 1

City and/or County: Texarkana/Bowie

Execution

Under penalties of perjury, I declare that I have read the foregoing statement and that the facts stated therein are true.

Date: May 27, 2014

Signature of Officer

Revised 10/2011

Attachment: Stmt. of Officer 2014 (M, W1,W4,W6) (1112 : City Council Swearing In Ceremony)

Form #2201 Rev. 10/2011

Submit to:
SECRETARY OF STATE
Government Filings Section
P O Box 12887
Austin, TX 78711-2887
512-463-6334
512-463-5569 - Fax
Filing Fee: None

This space reserved for office use

STATEMENT OF OFFICER

Statement

I, Dr. Brian Matthews, do solemnly swear (or affirm) that I have not directly or indirectly paid, offered, promised to pay, contributed, or promised to contribute any money or thing of value, or promised any public office or employment for the giving or withholding of a vote at the election at which I was elected or as a reward to secure my appointment or confirmation, whichever the case may be, so help me God.

Position to Which Elected/Appointed: Councilmember Ward 4

City and/or County: Texarkana/Bowie

Execution

Under penalties of perjury, I declare that I have read the foregoing statement and that the facts stated therein are true.

Date: May 27, 2014

Signature of Officer

Revised 10/2011

Attachment: Stmt. of Officer 2014 (M, W1,W4,W6) (1112 : City Council Swearing In Ceremony)

Form #2201 Rev. 10/2011

Submit to:
SECRETARY OF STATE
Government Filings Section
P O Box 12887
Austin, TX 78711-2887
512-463-6334
512-463-5569 - Fax
Filing Fee: None

This space reserved for office use

STATEMENT OF OFFICER

Statement

I, Josh Davis, do solemnly swear (or affirm) that I have not directly or indirectly paid, offered, promised to pay, contributed, or promised to contribute any money or thing of value, or promised any public office or employment for the giving or withholding of a vote at the election at which I was elected or as a reward to secure my appointment or confirmation, whichever the case may be, so help me God.

Position to Which Elected/Appointed: Councilmember Ward 6

City and/or County: Texarkana/Bowie

Execution

Under penalties of perjury, I declare that I have read the foregoing statement and that the facts stated therein are true.

Date: May 27, 2014

Signature of Officer

Revised 10/2011

Attachment: Stmt. of Officer 2014 (M, W1,W4,W6) (1112 : City Council Swearing In Ceremony)

In the name and by the authority of

The State of Texas

THIS IS TO CERTIFY that

BOB BRUGGEMAN

was duly elected

MAYOR

for the purposes of the May 10, 2014 election pursuant to Ordinance No. 2014-039 issued on March 10, 2014 cancelling the election that was scheduled to be held on May 10, 2014.

In testimony whereof, I have hereunto signed my name and caused the Seal of Texas to be affixed at the City of Texarkana, this the 27th day of May, 2014.

City Secretary

Signature of Presiding Officer of Canvassing Authority

Attachment: Cert. of Election 2014 (M,W1,W4,W6) (1112 : City Council Swearing In Ceremony)

In the name and by the authority of

The State of Texas

THIS IS TO CERTIFY that

Bradfield Casteel

was duly elected

Councilmember Ward 1

for the purposes of the May 10, 2014 election pursuant to Ordinance No. 2014-039 issued on March 10, 2014 cancelling the election that was scheduled to be held on May 10, 2014.

In testimony whereof, I have hereunto signed my name and caused the Seal of Texas to be affixed at the City of Texarkana, this the 27th day of May, 2014.

City Secretary

Signature of Presiding Officer of Canvassing Authority

Attachment: Cert. of Election 2014 (M,W1,W4,W6) (1112 : City Council Swearing In Ceremony)

In the name and by the authority of

The State of Texas

THIS IS TO CERTIFY that

Dr. Brian Matthews

was duly elected

Councilmember Ward 4

for the purposes of the May 10, 2014 election pursuant to Ordinance No. 2014-039 issued on March 10, 2014 cancelling the election that was scheduled to be held on May 10, 2014.

In testimony whereof, I have hereunto signed my name and caused the Seal of Texas to be affixed at the City of Texarkana, this the 27th day of May, 2014.

City Secretary

Signature of Presiding Officer of Canvassing Authority

Attachment: Cert. of Election 2014 (M,W1,W4,W6) (1112 : City Council Swearing In Ceremony)

In the name and by the authority of

The State of Texas

THIS IS TO CERTIFY that

Josh Davis

was duly elected

Councilmember Ward 6

for the purposes of the May 10, 2014 election pursuant to Ordinance No. 2014-039 issued on March 10, 2014 cancelling the election that was scheduled to be held on May 10, 2014.

In testimony whereof, I have hereunto signed my name and caused the Seal of Texas to be affixed at the City of Texarkana, this the 27th day of May, 2014.

City Secretary

Signature of Presiding Officer of Canvassing Authority

Attachment: Cert. of Election 2014 (M,W1,W4,W6) (1112 : City Council Swearing In Ceremony)

ORDINANCE NO. 2014-039

AN ORDINANCE OF THE CITY COUNCIL OF THE CITY OF TEXARKANA, TEXAS, APPROVING THE CANCELLATION OF THE MAY 10, 2014 ELECTION FOR THE PURPOSE OF ELECTING A MAYOR, A COUNCILMEMBER FOR WARD ONE, A COUNCILMEMBER FOR WARD FOUR, AND A COUNCILMEMBER FOR WARD SIX FOR THE CITY COUNCIL OF THE CITY OF TEXARKANA, TEXAS IN ACCORDANCE WITH THE TEXAS ELECTION CODE, SECTION 2.052(A), BY CERTIFYING THAT EACH CANDIDATE IS UNOPPOSED; PROVIDING FOR PUBLICATION; PROVIDING FOR A REPEALER CLAUSE; PROVIDING A SEVERABILITY CLAUSE; AND ESTABLISHING AN EFFECTIVE DATE.

WHEREAS, the City Council of the City of Texarkana, Texas by Ordinance No. 2014-022 dated February 10, 2014, called and ordered an election to be held in the City of Texarkana, Texas, at the respective voting places in each ward, said election to be held May 10, 2014, for the purpose of electing a Mayor, a Councilmember for Ward One, a Councilmember for Ward Four, and a Councilmember for Ward Six of the City of Texarkana, Texas; and

WHEREAS, the current Mayor and Councilmembers for Wards One, Four, and Six, who made application for the May 10, 2014 ballot were unopposed as of March 1, 2014 and as provided by the Texas Election Code, Section 2.052(a) the Certification of Unopposed Candidates For Other Political Subdivisions is attached as Exhibit "A" declaring the following candidates unopposed:

Mayor	Mr. Bob Bruggeman
Councilmember Ward One (1):	Mr. Bradfield Casteel
Councilmember Ward Four (4):	Mr. Brian Matthews
Councilmember Ward Six (6):	Mr. Josh Davis; and

NOW, THEREFORE, BE IT ORDAINED BY THE CITY COUNCIL OF THE CITY OF TEXARKANA, TEXAS:

SECTION 1: That the cancellation of the May 10, 2014 election for the purpose of electing a Mayor, a Councilmember for Ward One, a Councilmember for Ward Four, and a Councilmember for Ward Six for the City Council of the City of Texarkana, Texas, in accordance with the Texas Election Code, Section 2.052(a), by certifying that each candidate is unopposed, is hereby approved, a copy of which is attached hereto and incorporated herein as Exhibit "A".

SECTION 2: That the City Secretary be and is hereby directed to publish the caption of this Ordinance for three (3) successive days in the Texarkana Gazette.

SECTION 3: That in case a section, clause, sentence or part of this Ordinance shall be deemed or adjudged by a Court of competent jurisdiction to be invalid, then such invalidity shall not affect, impair or invalidate the remainder of this Ordinance.

Attachment: Ordinance No. 2014-039 (Cancelling Election) (1112 : City Council Swearing In Ceremony)

SECTION 4: That all ordinances or parts of ordinances in conflict herewith are specifically repealed.

SECTION 5: That this Ordinance shall be in full force and effect from and after its passage and approval.

PASSED AND APPROVED in Regular Council Session on this the 10th day of March, 2014.

BOB BRUGGEMAN, MAYOR

ATTEST:

JENNIFER EVANS
CITY SECRETARY 6:48 pm

Attachment: Ordinance No. 2014-039 (Cancelling Election) (1112 : City Council Swearing In Ceremony)

AW12-1
Prescribed by Secretary of State
Section 2.051 – 2.053, Texas Election Code
7/07

CERTIFICATION OF UNOPPOSED CANDIDATES FOR OTHER POLITICAL SUBDIVISIONS (NOT COUNTY)
CERTIFICACIÓN DE CANDIDATOS ÚNICOS PARA OTRAS SUBDIVISIONES POLITICAS (NO EL CONDADO)

To: Presiding Officer of Governing Body
Al: Presidente de la entidad gobernante

As the authority responsible for having the official ballot prepared, I hereby certify that the following candidates are unopposed for election to office for the election scheduled to be held on May 10, 2014**.**

Como autoridad a cargo de la preparación de la boleta de votación oficial, por la presente certifico que los siguientes candidatos son candidatos únicos para elección para un cargo en la elección que se llevará a cabo el 10 mayo de 2014**.**

List offices and names of candidates:
Lista de cargos y nombres de los candidatos:

Office(s) ***Cargo(s)***	**Candidate(s)** ***Candidato(s)***
Mayor	Bob Bruggeman
Councilmember Ward One	Bradfield Casteel
Councilmember Ward Four	Brian Matthews
Councilmember Ward Six	Josh Davis

Signature ***(Firma)***

Jennifer Evans
Printed name ***(Nombre en letra de molde)***

City Secretary
Title ***(Puesto)***

March 10, 2014
Date of signing ***(Fecha de firma)***

(Seal) ***(sello)***

Attachment: Ordinance No. 2014-039 (Cancelling Election) (1112 : City Council Swearing In Ceremony)

AW12-2
Prescribed by Secretary of State
Section 2.051 – 2.053, Texas Election Code
03/07

SAMPLE ORDER OF CANCELLATION
EJEMPLO DE ORDEN DE CANCELACIÓN

The City Council of Texarkana, Texas **hereby cancels the election scheduled to be held on**
(official name of governing body)
May 10, 2014 **in accordance with Section 2.053(a) of the Texas**
(date on which election was scheduled to be held)
Election Code. The following candidates have been certified as unopposed and are hereby elected as follows:

El ciudad conceyal de Texarkana ***por la presente cancela la elección que, de lo contrario,***
(nombre oficial de la entidad gobernante)
se hubiera celebrado el 10 mayo de 2014 ***de conformidad, con***
(fecha en que se hubiera celebrado la elección)
la Sección 2.053(a) del Código de Elecciones de Texas. Los siguientes candidatos han sido certificados como candidatos únicos y por la presente quedan elegidos como se haya indicado a continuación:

Candidate *(Candidato)*	**Office Sought** *(Cargo al que presenta candidatura)*
Bob Bruggeman	Mayor
Bradfield Casteel	Councilmember Ward One
Brian Matthews	Councilmember Ward Four
Josh Davis	Councilmember Ward Six

A copy of this order will be posted on Election Day at each polling place that would have been used in the election.

El Día de las Elecciones se exhibirá una copia de esta orden en todas las mesas electorales que se hubieran utilizado en la elección.

President ***(Presidente)*** Bob Bruggeman

Secretary ***(Secretario)*** Jennifer Evans

(seal) ***(sello)***

03-10-14
Date of adoption ***(Fecha de adopción)***

See reverse side for instructions
Instrucciones en el reverso

Attachment: Ordinance No. 2014-039 (Cancelling Election) (1112 : City Council Swearing In Ceremony)

Version: E

Briefing Sheet

Update Date: 5/29/2014 10:02 AM

Lead Department:	Municipal Services and Public Works	**Action Officer:**	Shirley Jaster, Director of Community and Public Works

Subject: May KTB Awards Presentation for Residential and Business of the Month

Updates/History of Briefing:

NOT APPLICABLE

Executive Summary and Background Information:

Potential Options:

- None
-

Fiscal Implications:

Staff Recommendation:

Advisory Board/Committee Review:

NONE

Board/Committee Recommendation:

NOT APPLICABLE

Advisory Board/Committee Meeting Date and Minutes:

NOT APPLICABLE

Attachments

a. Goals and Perspectives (DOCX)
b. Dr. Carmony Office 5305 Cowhorn Creek Road (JPG)
c. Dr. Carmony Office 5305 CCR 2 (JPG)
d. Petersen 3115 Pine (JPG)
e. Petersen 3115 Pine 2 (JPG)
f. Petersen 3115 Pine 3 (JPG)
g. Peterson 3115 Pine 4 (JPG)

City of Texarkana, Texas

Developing Perspectives and Goals Pending Approval by the City Council:

Perspectives	Goals
Serve the Community	☐ Promote an Environmentally Sensitive & Livable Community ☐ Provide a Safe Community ☐ Deliver Quality Services ☑ Foster a Healthy Community
Run the Operations	☐ Enhance Community Preparedness & Responsiveness ☑ Maximize Partnership Opportunities ☐ Provide Courteous & Responsive Customer Service ☑ Model a Positive City Image ☐ Deliver Efficient Services ☐ Cultivate Community Involvement & Access
Manage the Resources	☐ Maintain Fiscal Strength ☐ Maximize Utilization & Resources ☐ Invest in Infrastructure & Transportation
Develop Personnel	☐ Develop a Skilled & Diverse Workforce ☐ Create a Positive & Rewarding Work Culture

Perspectives and Goals Additional Comments:

(Insert Text Here/or say "NONE")

Resource Impact:

Staff time required if item is approved:	Select One By Clicking Here

Other Potential Impacts:

List or say "NONE APPLICABLE"

Public Information Plan:

☐	Newspaper Notice (Required by Statute)	☐	Public Hearing (Required by Statute)
☐	Public Forum/Input Session	☐	Press Release
☐	E-News Distribution	☐	Website Notice
☐	Social Media (Twitter, Facebook, etc.)	☐	Special Mailing
☐	Flyers Posted	☐	Banners Posted
☐	Survey	☐	Automated Phone Call
☐	None Required	☐	

Other:

Attachment: Dr. Carmony Office 5305 Cowhorn Creek Road (1120 : Keep Texarkana Beautiful, KTB, Awards for May)

Attachment: Dr. Carmony Office 5305 CCR 2 (1120 : Keep Texarkana Beautiful, KTB, Awards for May)

Attachment

City of Texarkana, Texas

Version:

Briefing Sheet

Update Date: 5/5/2014 10:19 AM

Lead Department: City Secretary **Action Officer:** Jennifer Evans, City Secretary

Subject: City Council Member Appointments Annual Review

Updates/History of Briefing:

NOT APPLICABLE

Executive Summary and Background Information:

It is time for the City Council to make councilmember appointments to the following committees:

Ark-Tex Council of Governments
Intergovernmental Advisory Committee

Potential Options:

- None
-

Fiscal Implications:

None

Staff Recommendation:

(Insert Text Here)

Advisory Board/Committee Review:

NONE

Board/Committee Recommendation:

NOT APPLICABLE

Advisory Board/Committee Meeting Date and Minutes:

NOT APPLICABLE

Attachments

a. Goals and Perspectives (DOCX)
b. Council Appointments Review List (XLSX)

City of Texarkana, Texas

Developing Perspectives and Goals Pending Approval by the City Council:

Perspectives	Goals
Serve the Community	☐ Promote an Environmentally Sensitive & Livable Community ☐ Provide a Safe Community ☑ Deliver Quality Services ☐ Foster a Healthy Community
Run the Operations	☐ Enhance Community Preparedness & Responsiveness ☐ Maximize Partnership Opportunities ☐ Provide Courteous & Responsive Customer Service ☑ Model a Positive City Image ☐ Deliver Efficient Services ☐ Cultivate Community Involvement & Access
Manage the Resources	☐ Maintain Fiscal Strength ☐ Maximize Utilization & Resources ☐ Invest in Infrastructure & Transportation
Develop Personnel	☐ Develop a Skilled & Diverse Workforce ☐ Create a Positive & Rewarding Work Culture

Perspectives and Goals Additional Comments:

NONE

Resource Impact:

Staff time required if item is approved: NOT APPLICABLE	Select One By Clicking Here

Other Potential Impacts:

NONE APPLICABLE

Public Information Plan:

☐	Newspaper Notice (Required by Statute)	☐	Public Hearing (Required by Statute)
☐	Public Forum/Input Session	☐	Press Release
☐	E-News Distribution	☐	Website Notice
☐	Social Media (Twitter, Facebook, etc.)	☐	Special Mailing
☐	Flyers Posted	☐	Banners Posted
☐	Survey	☐	Automated Phone Call
☑	None Required	☐	

Other:

Attachment: Goals and Perspectives (1057 : Council Member Appointments)

Expired Boards & Commissions Appointments

ARK-TEX COG	Josh Davis	24-Oct-11	2.0	23-Oct-13	CC	1	2
ARK-TEX COG	Willie Ray	24-Oct-11	2.0	23-Oct-13	CC	1	2
ARK-TEX COG	Tina Veal-Gooch	24-Oct-11	2.0	23-Oct-13	CC	1	2
BI-STATE IAC	Bill Miller	23-Apr-13	1.0	23-Apr-14	CC	1	2
BI-STATE IAC	Tina Veal-Gooch	23-Apr-13	1.0	23-Apr-14	CC	1	2

Current Boards & Commissions Appointments

BOWIE CENTRAL APPRAISAL DISTRICT	Josh Davis	5-Nov-13	2.0	5-Nov-15	CC	0	0
ELECTRICAL EXAMINING BOARD	Brad Casteel	8-Jul-13	3.0	7-Jul-16	M-CC	0	0
MPO POLICY BOARD	Willie Ray	1-Jan-13	5.0	31-Dec-17	CC	0	0

Council members have the option to be appointed to a board, continue serving on a current board, request to serve on another board, or discontinue service on a present board.

Mayor Pro-Tem Appointment

Mayor Pro-Tem	Tina Veal-Gooch	13-Jan-14		31-May-14	CC

Attachment: Council Appointments Review List (1057 : Council Member Appointments)

CITY OF TEXARKANA

CITY COUNCIL

MINUTES ● MAY 12, 2014

Council Chambers | **Regular Meeting** | **6:00 PM**

220 TEXAS BLVD.
TEXARKANA, TX 75501

I. CALL TO ORDER, ROLL CALL, ESTABLISHMENT OF QUORUM

Attendee Name	Title	Status	Arrived
Bob Bruggeman	Mayor	Present	
Brad Casteel	Ward 1	Present	
Willie Ray	Ward 2	Present	
Tina Veal-Gooch	Ward 3	Present	
Brian Matthews	Ward 4	Present	
Bill Miller	Ward 5	Present	
Josh Davis	Ward 6	Present	

Staff Present: City Manager John Whitson, Jennifer Evans, Bill King, Gary Smith, J.D. Phillips, John Murphy, Karey Parker, Jim Powell, Craig Lindholm, Shirley Jaster, Eric Schlotter, David Orr, Pam Burns, Charlie Bassett, Lisa Thompson, Kyle Dooley, Intern Monique Ross, Intern Hannah Dyal, Intern Morgan Westbrook and Jerry Sparks.

Legal Counsel: None

II. INVOCATION AND PLEDGE BY COUNCILMEMBER JOSH DAVIS

III. MAYOR'S OPENING REMARKS

Upcoming City Council Meetings:

Tuesday, May 27, 2014 at 6:00 p.m.
Monday, June 9, 2014 at 6:00 p.m.
Monday, June 23, 2014 at 6:00 p.m.

Parks & Recreation Events:

May 15th	Spring Lake Park	Movie - "Frozen"
May 16th & 17th	Wallace Park	Soccer Tournament
May 17th	Karrh Park	Softball Tournament
May 17th	Southwest Center	Baseball Tournament
May 17th	Southwest Center	Veterans Fair

May 22nd	Spring Lake Park	Movie - "Thor - The Dark World"

Other City Events:

May 24th 7:00 a.m. until sold out
Grand Opening of Farmers' Market

Special Events:

May 26th 11:30 a.m. - 11:45 a.m.
Vietnam Veterans of America "Memorial Day Walk" (Vietnam Memorial at 7th & State Line Ave.)

Information and Presentations

1. City of Texarkana, Texas Website 'Notify Me' Program

   Lisa Thompson, Public Information Officer, gave an overview of the "Notify Me" program through the city's website. It's a interactive program allowing citizens and others interested to sign up for notifications or updates on city events. To sign up for this service, visit ci.texarkana.tx.us and click on "Notify Me".

2. City of Texarkana, Texas 2014 Internship Program Recognition

   Mayor Bruggeman presented a certificate of recognition and city pin to interns Hannah Dyal, Monique Ross and Morgan Westbrook along with Dr. Walter Casey, Assistant Professor of Political Science with Texas A&M University - Texarkana. Each intern successfully completed the 2014 City of Texarkana, Texas Internship Program in various areas of the Finance Department, Municipal Court and Human Resources Department. David Orr, Program Manager, expressed commendation for the hard work of each student intern.

3. Kids to Parks Day Proclamation - May 17, 2014

   Mayor Bruggeman read a proclamation entitled "Kids to Parks Day" and encouraged citizens to take their children and grandchildren to visit a local, state or national park on Saturday, May 17, 2014.

4. Presentation on Proposed Neighborhood Revitalization Plan

   Craig Lindholm, Executive Director of Community Redevelopment and Grants, gave a presentation.

Appointments to Boards & Commissions

There were no appointments made.

IV. OPEN FORUM: COMMENTS FROM THE PUBLIC (LIMIT 5 MINUTES EACH)

Tracey Prather & Ed Black addressed council regarding the Museums System "Ghost Walking Tours" in downtown Texarkana to be held on June 7th and June 21st.

Craig Lindholm reported the huge success of citizen turnout for *Better Block Texarkana* held on Saturday May 10th in downtown Texarkana. Mr. Lindholm also gave a special thanks to the city's Street Department staff and Parks and Recreation staff for their assistance with this event.

V. ITEMS FOR CONSIDERATION

Consent Items

Councilmember Miller left the meeting. (6:47 p.m.)
Councilmember Miller returned to the meeting (6:49 p.m.)
(Adopted 6:48 p.m.)

RESULT:	**ADOPTED [5 TO 0]**
MOVER:	Josh Davis, Ward 6
SECONDER:	Brian Matthews, Ward 4
AYES:	Casteel, Ray, Veal-Gooch, Matthews, Davis
EXCUSED:	Bruggeman
AWAY:	Miller

1. Consider approval of the minutes of the Regular Meeting of the City Council held on April 28, 2014 at 6:00 PM.

Action Items

There were no action items considered.

VI. FIRST BRIEFINGS

1. Ordinance No. 2014-054 prohibiting the wearing of pants below the waist inappropriately exposing skin or undergarments (i.e., sagging).

Public Hearing:	May 27, 2014
Second Briefing:	June 9, 2014
Council Vote:	June 23, 2014

City Manager Whitson briefed this item and stated that staff does not recommend the adoption of this proposed ordinance. Councilmember Casteel spoke in support of adopting this proposed ordinance.

RESULT:	**MOVED FORWARD**	**Next: 5/27/2014 6:00 PM**

2. Public Hearing and consider Ordinance No. 2014-055 authorizing the City Manager to execute the Third Addendum to Declaration of Gift Agreement between the City of Texarkana, Texas and the Board of Regents of The Texas A&M University System to revise and amend certain obligations remaining under the "Declaration of Gift Agreement" executed November 7, 2005 as amended by the" First and Second Declaration of Gift Agreement" executed February 11, 2011 and providing for a limited funding in the amount of $235,000, payable to Texas A&M University - Texarkana.

   Public Hearing: May 27, 2014
   Second Briefing:
   Council Vote: May 27, 2014

   Shirley Jaster, Assistant City Manager, briefed this item.

RESULT:	**MOVED FORWARD**	**Next: 5/27/2014 6:00 PM**

3. Resolution No. 2014-057 authorizing the City Manager to purchase one (1) Vac-Con PD Combination Unit for Texarkana Water Utilities in an amount not to exceed $309,770.20.

   Public Hearing: May 27, 2014
   Second Briefing: June 9, 2014
   Council Vote: June 23, 2014

   Bill King, Executive Director of Texarkana Water Utilities, briefed this item.

RESULT:	**MOVED FORWARD**	**Next: 5/27/2014 6:00 PM**

4. Resolution No. 2014-058 authorizing the City Manager to purchase a Sprinter Cargo Van equipped with an Rovver X Truck Camera System for the Texarkana Water Utilities in an amount not to exceed $164,995.00 with the Texarkana, Texas portion not to exceed $102,610.39.

   Public Hearing: May 27, 2014
   Second Briefing: June 9, 2014
   Council Vote: June 23, 2014

   Bill King briefed this item.

RESULT:	**MOVED FORWARD**	**Next: 5/27/2014 6:00 PM**

5. Resolution No. 2014-059 recognizing Leadership Texarkana and their effort to document the Community's Vision and Values supporting Texarkana USA.

Public Hearing: May 27, 2014
Second Briefing: June 9, 2014
Council Vote: June 23, 2014

City Manager Whitson briefed this item.

RESULT:	**MOVED FORWARD**	**Next: 5/27/2014 6:00 PM**

6. Resolution No. 2014-061 consenting to the sale of airport timber.

Public Hearing:
Second Briefing:
Council Vote: May 27, 2014

Stephen Luebbert, Texarkana Regional Airport Director, briefed this item.

RESULT:	**MOVED FORWARD**	**Next: 5/27/2014 6:00 PM**

7. Resolution No. 2014-063 authorizing the City Manager to execute a contract for the exterior and interior repainting of the I-30 and Liberty Eylau elevated storage tanks and the interior of the Wright Patman Water Treatment Plant backwash tank with Utility Service Co., Inc. of Perry, Georgia in an amount not to exceed $1,018,850.

Public Hearing: May 27, 2014
Second Briefing: June 9, 2014
Council Vote: June 23, 2014

Bill King briefed this item.

RESULT:	**MOVED FORWARD**	**Next: 5/27/2014 6:00 PM**

VII. PUBLIC HEARINGS

1. Ordinance No. 2014-050 amending Chapter 13 Motor Vehicles and Traffic of the Code of Ordinances regulating the parking of vehicles in front yards of residential structures.

Public Hearing: May 12, 2014
Second Briefing: May 27, 2014
Council Vote: June 9, 2014

Shirley Jaster summarized in brief that the proposed ordinance would basically limit the number of vehicles parked in residential yards. City Manager Whitson spoke to this item.

Tom Sadowski, Keep Texarkana Beautiful representative, spoke to council regarding junk car issues and how that reflects on the beautification of Texarkana.

Councilmember Miller said the ordinance language needed more clarification. Shirley Jaster responded that the proposed ordinance is in draft stage and would be changed to fit and read as the council wishes.

RESULT:	**MOVED FORWARD**	**Next: 5/27/2014 6:00 PM**

2. Ordinance No. 2014-051 granting a Specific Use Permit to allow the one additional use of a tattoo studio on the east 75' of Lots 1-3, C.E. Huckabee's Garden Addition, located at 1002 Westlawn Drive. Ronald Griffith, owner. Eric McIntyre, applicant.

Public Hearing: May 12, 2014
Second Briefing: May 27, 2014
Council Vote: June 9, 2014

There were no comments made at this public hearing.

RESULT:	**MOVED FORWARD**	**Next: 5/27/2014 6:00 PM**

3. Ordinance No. 2014-052 granting a Specific Use Permit to allow the location of a CEVMS (digital) billboard on a part of Tract 18, George Brinlee HRS, A-18, located at 2506 Richmond Road. Mark Liepman, owner. Chad Shipp, Shipp Outdoor, LLC, agent. (Due to Planning and Zoning Commission denial, a 3/4 vote by the City Council is required to approve this request).

Public Hearing: May 12, 2014
Second Briefing: May 27, 2014
Council Vote: June 9, 2014

The following citizens spoke at the public hearing about the proposed digital billboard:
For: Amy Thomas, Tracey Prather, Brian Goesl, Chadd Shipp, Joel Orr, and Shanna Richardson.
Against: Tom Sadowski, Julie Tidwell, Fred Cain and Parker Phoenix.

Ruth Ellen Whitt stated she was not for or against the proposed digital billboard, but asked council members to consider the overall vision for the city before making a decision on this item.

Councilmember Veal-Gooch said this issue is an opportunity to address everything in the city and would like for the Planning and Zoning Commission to develop a vision plan that would contain clutter when it comes to signage. Advertising and marketing can be done through other means. The City Council should look at the big picture and how the city will be affected in the future.

Councilmember Casteel said Texarkana is growing and businesses make money through advertising.

Councilmember Ray said that signs are very helpful while driving through a city.

Councilmember Miller suggested that the Planning and Zoning Commission design a comprehensive plan to decide and regulate signage in certain areas and on certain streets for council consideration.

The following referenced documents are attached or linked for public record purposes:
1. Digital Billboard Fact Sheet from Scenic America.
2. A comprehensive report on safety impacts of digital billboards. <http://www.azmag.gov/Documents/pdf/cms.resource/NCHRP_Digital_Billboard_Report70216.pdf>
3. Scenic Dallas statement which verifies action taken by the City of Dallas in the year 2000.

RESULT:	**MOVED FORWARD**	**Next: 5/27/2014 6:00 PM**

4. Ordinance No. 2014-053 revoking Specific Use Permit #S-628 that permitted the location of a tattoo studio on Lots 14-16, Block 2, Beverly Addition, located at 2402 New Boston Road. City of Texarkana, Texas, agent.

Public Hearing: May 12, 2014
Second Briefing: May 27, 2014
Council Vote: June 9, 2014

There were no comments made at this public hearing.
(Adopted 8:38 p.m.)

RESULT:	**ADOPTED [UNANIMOUS]**
MOVER:	Bill Miller, Ward 5
SECONDER:	Tina Veal-Gooch, Ward 3
AYES:	Casteel, Ray, Veal-Gooch, Matthews, Miller, Davis
EXCUSED:	Bruggeman

VIII. SECOND BRIEFING WITH UPDATES

1. Resolution No. 2014-042 accepting a bid and authorizing the City Manager to enter into a contract for the construction of Phase IV TAMU East Approach.

Public Hearing: April 28, 2014
Second Briefing: May 12, 2014
Council Vote: May 27, 2014

Kyle Dooley, City Engineer, said two bids were submitted to the city. Tatum Excavating Company had the low bid. Funds are available in the 2009 bond funds for this project.

RESULT:	MOVED FORWARD	Next: 5/27/2014 6:00 PM

IX. SECOND BRIEFING WITHOUT UPDATES

1. Ordinance No. 2014-048 amending Chapter 15, Offenses and Miscellaneous Provisions; of the Texarkana City Code by Prohibiting the sale to a minor of electronic Cigarettes and/or liquid nicotine and prohibiting self-service merchandising.

   Public Hearing: April 28, 2014
   Second Briefing: May 12, 2014
   Council Vote: May 27, 2014

   There were no updates given.

RESULT:	MOVED FORWARD	Next: 5/27/2014 6:00 PM

X. ITEMS FOR DISCUSSION

Staff Updates

There were no staff updates.

Marking of Handicapped Only Parking throughout the City

Mayor Bruggeman opened the discussion reporting that a concerned citizen contacted him about unpermitted vehicles parking in handicapped only parking. Mayor Bruggeman said he would like staff to research the matter extensively and prepare a report back to the City Council. He also stated, that if warranted, city staff should recommend an ordinance that would strengthen the city's ability to enforce the proper marking of handicapped only parking and the effective enforcement thereof. Staff will research federal, state, and local laws related to handicapped parking and survey the community to estimate the level of compliance with these laws. Based on the results of the research, staff will determine a game plan for meeting the direction of the City Council.

XI. INFORMATION ITEM

City of Texarkana, Texas Quarterly Investment Report for the Quarter Ended March 31, 2014

Charlie Bassett, Chief Financial Officer, presented the quarterly investment report. City Manager Whitson said this report is for the council's information and review.

XII. ADMINISTRATIVE COMMENTS

1. Council

   Councilmember Matthews asked if information concerning marking and designating handicapped parking in residential areas would be considered in staff's research and report to council on handicapped parking. City Manager Whitson said research had been

done on handicapped parking in residential areas and that he would re-forward the information to council members.

2. Staff

Staff had no comments.

XIII. ADJOURNMENT

Motion to Adjourn

A motion was made to adjourn the meeting.
(8:49 p.m.)

RESULT:	**ADOPTED [UNANIMOUS]**
MOVER:	Brian Matthews, Ward 4
SECONDER:	Bill Miller, Ward 5
AYES:	Casteel, Ray, Veal-Gooch, Matthews, Miller, Davis
EXCUSED:	Bruggeman

Jennifer Evans
City Secretary

Bob Bruggeman
Mayor

City of Texarkana, Texas

Version: E

Briefing Sheet

Update Date: 4/29/2014 7:46 AM

Lead Department: City Engineer **Action Officer:** Dusty Henslee,

Subject: Resolution No. 2014-042 accepting a bid and authorizing the City Manager to enter into a contract for the construction of Phase IV TAMU East Approach.

Briefing:	5/27/2014	**Public Hearing:**	4/28/2014	**Second Briefing:**	May 12, 2014	**Council Vote:**	5/27/2014

Item Schedule

Schedule 1: Brief twice - vote once (six weeks)

Updates/History of Briefing:

The Resolution and Bid Comparison were added to the packet. Based on the bid comparison, Staff recommends awarding the contract to Tatum Excavating Company for the amount of $2,325,595.00. Funds are available for this project from the 2003, 2005, and 2009 bond funds. TWU will also be contributing funds to project.

Executive Summary and Background Information:

The City of Texarkana, Texas will be accepting bids to construct Phase IV TAMU East Approach Street Construction Project. This project will consist of a new roadway from Summerhill Road west approximately 2,000 linear feet until it ties in with Shilling Lane. This street will be a 50’ concrete curb and gutter street section with sidewalks on both sides of the street. Drainage and utility improvements will also be included in this project.

The first briefing to council will be on 04/14/2014. Plans and project location will be presented at the first briefing. Bids will be opened on 04/24/14 and public hearing will be held on 04/28/14. Council to be presented a resolution to consider accepting a bid and entering into an agreement to construct Phase IV TAMU East Approach Construction Project at the second briefing on 05/12/14. Council will be scheduled to vote to accept/reject resolution on 05/27/14.

Potential Options:

- Accept bid to construct proposed street
- Reject bid to construct proposed street
-

Fiscal Implications:

Funding for this project will come from the 2009 Bond Fund. Fiscal implications will be discussed at the second briefing on 05/12/14 when the resolution is presented.

Staff Recommendation:

Step 1 - Staff presents construction plans to council for Phase IV TAMU East Approach Construction Project at the first briefing on 04/14/2014.

City of Texarkana, Texas

Step 2 –Staff will present a resolution to council to consider accepting a bid and entering into an agreement to construct Phase IV TAMU East Approach Construction Project at the second briefing on 05/12/14.

Advisory Board/Committee Review:

NONE

Board/Committee Recommendation:

NOT APPLICABLE

Advisory Board/Committee Meeting Date and Minutes:

NOT APPLICABLE

Attachments

a. Goals and Perspectives (DOCX)
b. Exhibit "A" Phase IV TAMU East Street Approach Construction Project Location Map (PDF)
c. Exhibit "B" Phase IV TAMU East Approach Street Construction Project Plans (PDF)
d. 2014-042 Phase IV TAMU East Approach (DOC)
e. Exhibit A-Bid Comparison for Phase IV TAMU East Approach (PDF)

Staff Coordination

City Engineer Kyle Dooley Department Head Review Completed 03/25/2014 11:41 AM
Municipal Services and Public Works Shirley Jaster MS & PW Review Completed 03/26/2014 4:48 PM
Public Information Officer Lisa Thompson PIO Review Completed 03/26/2014 4:50 PM
Finance Charlie Bassett Review Completed 04/04/2014 3:36 PM
City Manager John Whitson City Manager Review Completed 04/07/2014 8:11 AM
City Council Jennifer Evans Meeting Completed 05/05/2014 3:25 PM

Meeting History

04/14/14	City Council	MOVED FORWARD	Next: 04/28/14
04/28/14	City Council	MOVED FORWARD	Next: 05/12/14
05/12/14	City Council	MOVED FORWARD	Next: 05/27/14

Kyle Dooley, City Engineer, said two bids were submitted to the city. Tatum Excavating Company had the low bid. Funds are available in the 2009 bond funds for this project.

City of Texarkana, Texas

Developing Perspectives and Goals Pending Approval by the City Council:

Perspectives	Goals
Serve the Community	☑ Promote an Environmentally Sensitive & Livable Community ☐ Provide a Safe Community ☑ Deliver Quality Services ☐ Foster a Healthy Community
Run the Operations	☐ Enhance Community Preparedness & Responsiveness ☐ Maximize Partnership Opportunities ☐ Provide Courteous & Responsive Customer Service ☐ Model a Positive City Image ☑ Deliver Efficient Services ☐ Cultivate Community Involvement & Access
Manage the Resources	☐ Maintain Fiscal Strength ☐ Maximize Utilization & Resources ☑ Invest in Infrastructure & Transportation
Develop Personnel	☐ Develop a Skilled & Diverse Workforce ☐ Create a Positive & Rewarding Work Culture

Perspectives and Goals Additional Comments:

NONE

Resource Impact:

Staff time required if item is approved:	No Additional

Other Potential Impacts:

NONE APPLICABLE

Public Information Plan:

☑	Newspaper Notice (Required by Statute)	☐	Public Hearing (Required by Statute)
☑	Public Forum/Input Session	☐	Press Release
☐	E-News Distribution	☐	Website Notice
☐	Social Media (Twitter, Facebook, etc.)	☐	Special Mailing
☐	Flyers Posted	☐	Banners Posted
☐	Survey	☐	Automated Phone Call
☐	None Required	☐	

Other:

Attachment: Goals and Perspectives (1076 : Res. No. 2014-042 Phase IV TAMU East Approach Street Construction Project)

Phase IV TAMU East Approach

Attachment: Exhibit "A" Phase IV TAMU East Street Approach Construction Project Location Map (1076 : Res. No. 2014-042 Phase IV TAMU

CITY OF TEXARKANA, TEXAS

CONSTRUCTION PLANS FOR

TAMU EAST APPROACH PHASE IV

MAYOR

BOB BRUGGEMAN

COUNCIL MEMBERS

BRAD CASTEEL
Ms. WILLIE RAY
TINA VEAL-GOOCH
BRIAN MATTHEWS
BILL MILLER
JOSH DAVIS

CITY MANAGER

JOHN A. WHITSON

PUBLIC WORKS DIRECTOR

B. KYLE DOOLEY, P.E., CFM.

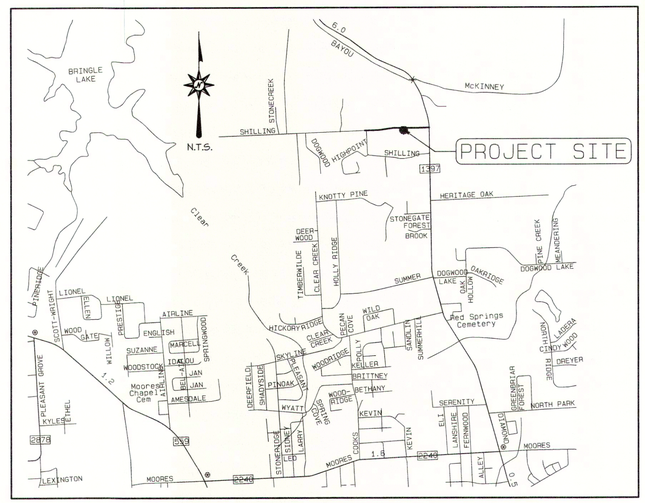

VICINITY MAP

INDEX OF SHEETS

SHEET NO.	DESCRIPTION OF SHEETS
1.	TITLE SHEET
2.	TYPICAL SECTIONS
3	EXISTING CONDITIONS AND DEMOLITION PLAN
4-6.	STREET PLAN AND PROFILE
7.	CURB RAMP AND DRIVEWAY DETAILS
8-9.	RETAINING WALL PLAN AND PROFILE
10.	RETAINING WALL SITE PLAN (SP1) (**)
11.	RETAINING WALL SITE PLAN (SP2) (**)
12.	MASONRY RETAINING WALLS NOTES AND STD. DETAILS (RW1) (**)
13.	MASONRY RETAINING WALLS DETAILS (RW2) (**)
14.	MASONRY RETAINING WALLS DETAILS (RW3) (**)
15.	MASONRY RETAINING WALLS DETAILS (RW4) (**)
16.	DRAINAGE AREA OVERALL MAP
17.	DRAINAGE AREA POST CONSTRUCTION
18.	DRAINAGE CALCULATIONS
19.	STROM DRAIN "A" & "B" PLAN AND PROFILE
20.	STORM DRAIN "C" PLAN AND PROFILE
21.	4' X 3' R.B.C. AND 4' X 4' R.B.C. PLAN AND PROFILE
22..	CURB INLET DETAILS (*)
23.	SCP-4 (*)
24.	PW (*)
25.	UTILITY PLAN
26.	SEWER PLAN AND PROFILE
27-28.	WATER SYSTEM STANDARD DETAILS
29-30.	WASTE WATER SYSTEM STANDARD DETAILS
31.	ELECTRICAL & LIGHTING PLAN
32.	RID (1) - 98 (*)
33.	RID (2) - 98 (*)
34.	ROADWAY ILLUMINATION DETAILS
35.	EROSION CONTROL PLAN
36.	EROSION CONTROL DATA SHEET
37.	SIGNAGE AND STRIPING PLAN
38.	PM (1) - 12 (*)
39.	PM (2) - 12 (*)
40	PM (3) - 12 (*)
41-46.	CROSS SECTIONS
47.	BARBED-WIRE FENCE DETAILS (*)
48.	ED(3)-03 (*)
49.	ED(4)-03 (*)
50.	ED(5)-03 (*)
50a.	ED(6)-03 (*)

THE STANDARD SHEETS SPECIFICALLY IDENTIFIED ABOVE WITH AN ** ARE BY FAKOFSKE ENGINEERING, INC. STRUCTURAL ENGINEERING CONSULTANTS AND ARE TO BE USED FOR PERMIT AND BIDDING PURPOSES ONLY AND NOT FOR CONSTRUCTION.

THE STANDARD SHEETS SPECIFICALLY IDENTIFIED ABOVE WITH AN * HAVE BEEN SELECTED BY ME OR UNDER MY RESPONSIBLE SUPERVISION AS BEING APPLICABLE TO THIS PROJECT.

THE SEAL APPEARING ON THIS DOCUMENT WAS AUTHORIZED BY KAYLA R. WOOD, P.E. NO. 104659 ON 3/12/14. ALTERATION OF A SEALED DOCUMENT WITHOUT PRIOR NOTIFICATION TO THE RESPONSIBLE ENGINEER IS AN OFFENSE UNDER THE TEXAS ENGINEERING PRACTICE ACT.

STATE OF TEXAS
KAYLA R. WOOD
104659
REGISTERED
PROFESSIONAL ENGINEER

SUBMITTED

KAYLA R. WOOD, P.E.
MTG ENGINEERS & SURVEYORS, INC.

STATE OF TEXAS
B. KYLE DOOLEY
38648
LICENSED
PROFESSIONAL ENGINEER

APPROVED

B. Kyle Dooley, PE 3/25/14

B. KYLE DOOLEY, P.E., CFM.
PUBLIC WORKS DIRECTOR

APPROVED BY THE CITY OF TEXARKANA, TEXAS

THIS _____ DAY OF _____ IN THE YEAR OF _____

APPROVED_____ MAYOR

ATTEST_____ CITY SECRETARY

Texas811
Know what's below. Call before you dig.

DPW-14-1901-02

PREPARED BY:

MTG engineers & surveyors

5930 SUMMERHILL RD. | P.O. BOX 3786
TEXARKANA TEXAS 75501

P 903.838.8533 | F 903.832.4700
www.mtgengineers.com

© MTG 2014 TBPE FIRM NO. F-354

PJ # 116019

SET NO. _____

Attachment: Exhibit "B" Phase IV TAMU East Approach Street Construction Project Plans (1076 : Res. No. 2014-042 Phase IV TAMU East Approach Street Construction Project)

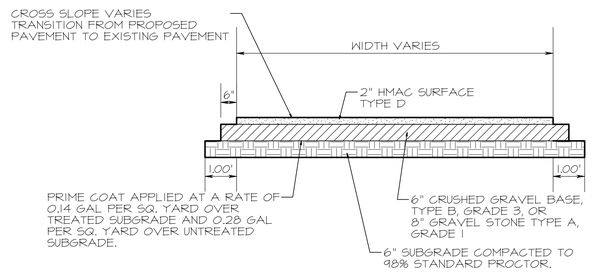

ASPHALT TRANSITION PAVEMENT
N.T.S.

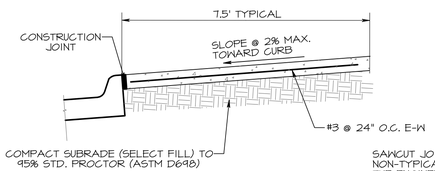

SAWCUT JOINTS AT 5' TYPICAL WHERE APPLICABLE. NON-TYPICAL JOINTS TO BE FIELD DETERMINED BY THE ENGINEER.

EXPANSION JOINTS INSTALLED EVERY 40'. NON-TYPICAL JOINTS TO BE FIELD DETERMINED BY THE ENGINEER.

TYPICAL 4" THICK SIDEWALK SECTION
NOT TO SCALE

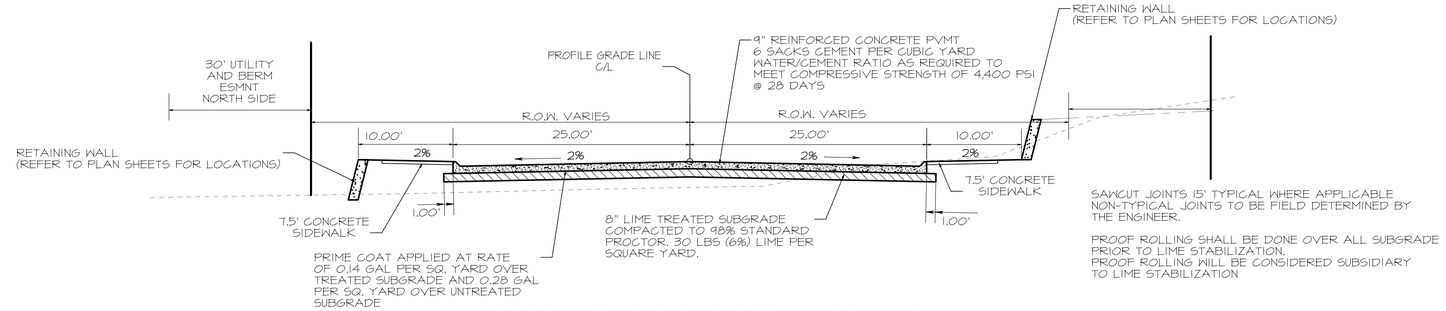

SAWCUT JOINTS 15' TYPICAL WHERE APPLICABLE NON-TYPICAL JOINTS TO BE FIELD DETERMINED BY THE ENGINEER.

PROOF ROLLING SHALL BE DONE OVER ALL SUBGRADE PRIOR TO LIME STABILIZATION. PROOF ROLLING WILL BE CONSIDERED SUBSIDIARY TO LIME STABILIZATION

TYPICAL SECTION WITH RETAINING WALLS
N.T.S.

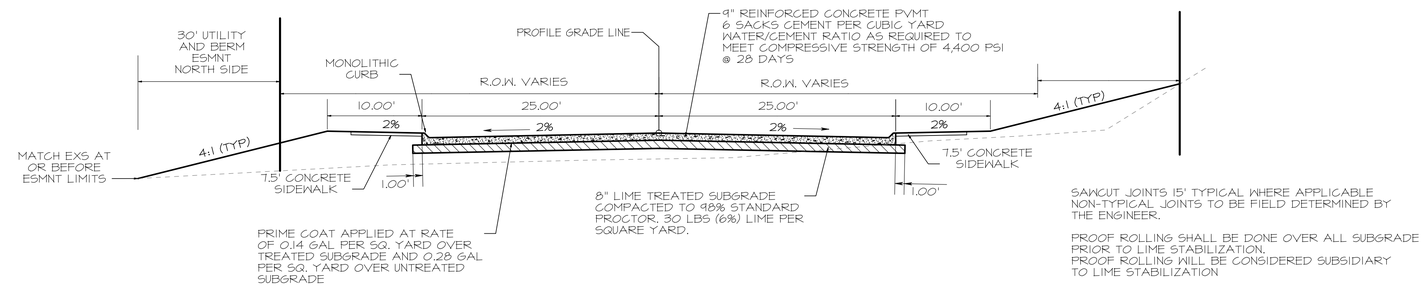

SAWCUT JOINTS 15' TYPICAL WHERE APPLICABLE NON-TYPICAL JOINTS TO BE FIELD DETERMINED BY THE ENGINEER.

PROOF ROLLING SHALL BE DONE OVER ALL SUBGRADE PRIOR TO LIME STABILIZATION. PROOF ROLLING WILL BE CONSIDERED SUBSIDIARY TO LIME STABILIZATION

TYPICAL SECTION WITHOUT RETAINING WALLS
N.T.S.

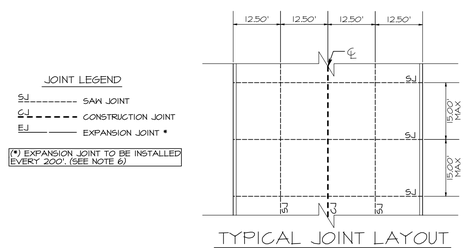

TYPICAL JOINT LAYOUT
NOT TO SCALE

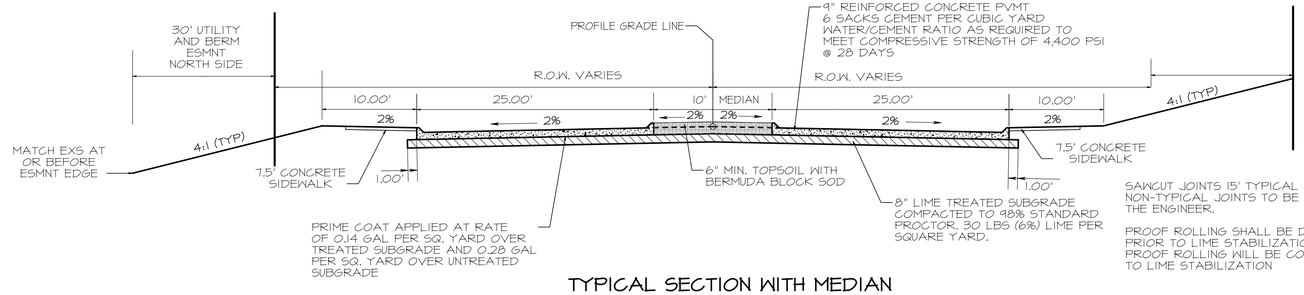

SAWCUT JOINTS 15' TYPICAL WHERE APPLICABLE NON-TYPICAL JOINTS TO BE FIELD DETERMINED BY THE ENGINEER.

PROOF ROLLING SHALL BE DONE OVER ALL SUBGRADE PRIOR TO LIME STABILIZATION. PROOF ROLLING WILL BE CONSIDERED SUBSIDIARY TO LIME STABILIZATION

TYPICAL SECTION WITH MEDIAN
N.T.S.

NOTE:
VIBRATORY OR PNEUMATIC SCREED SHALL BE USED ONLY AT THE DISCRETION OF THE ENGINEER. (I.E. INTERSECTIONS AND SMALL PAVING AREAS.)

GENERAL NOTES:

1. THE LOCATION OF THE JOINTS SHALL BE AS SHOWN ABOVE.

2. THE ENGINEER SHALL SELECT A TARGET PLACEMENT THICKNESS FOR THE SEALANT DETAILS WHICH SHOW RANGES IN THICKNESS. THE TARGET THICKNESS WILL NORMALLY BE THE MIDPOINT OF THE RANGE.

3. THE JOINT RESERVOIR FOR SEALANT SHALL BE SAWED UNLESS OTHERWISE SHOWN ON THE PLANS FOR THE LONGITUDINAL AND TRANSVERSE CONSTRUCTION AND THE TWO SAWED JOINTS,

4. THE JOINTS SHALL BE CLEANED IN ACCORDANCE WITH THE ITEM 438 AND PRIOR TO BEGINNING OPERATIONS, THE CONTRACTOR SHALL SUBMIT A STATEMENT FROM THE SEALANT MANUFACTURER SHOWING THE RECOMMENDED EQUIPMENT AND INSTALLATION PROCEDURES TO BE USED.

5. THE SAW CUT FOR THE LONGITUDINAL JOINT SHALL BE ONE THIRD THE SLAB THICKNESS WHEN CRUSHED LIMESTONE IS USED AS THE COARSE AGGREGATE.

6. EXPANSION JOINTS ARE TO BE INSTALLED EVERY 200'. EXPANSION JOINT TO BE MADE OF 3/4" REFLEX RUBBER EXPANSION JOINT MATERIAL OR APPROVED EQUAL.

REINFORCING STEEL SIZE & SPACING

PAVEMENT THICKNESS D (IN)	PAVEMENT WIDTH (FT)	LONGITUDINAL STEEL									TRANSVERSE STEEL		
		# 4 BARS			# 5 BARS			# 6 BARS			# 4 BARS	# 5 BARS	# 6 BARS
		NUMBER OF BARS	SPACING (IN)	END BAR SPACING (IN)	NUMBER OF BARS	SPACING (IN)	END BAR SPACING (IN)	NUMBER OF BARS	SPACING (IN)	END BAR SPACING (IN)	SPACING (IN)	SPACING (IN)	SPACING (IN)
9	25	22	14.00	3	14	22.50	4	-	-	-	36	36	-

NOTE: TABLE SHOWN INDICATES 25' SECTION (1/2 PAVEMENT WIDTH).

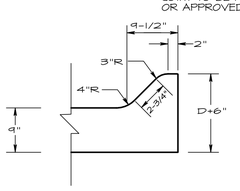

MONOLITHIC CURB DETAILS
NOT TO SCALE

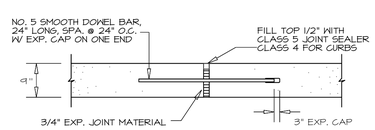

EXPANSION JOINT
NOT TO SCALE

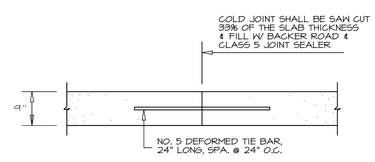

LONGITUDINAL / CONSTRUCTION JOINT
NOT TO SCALE

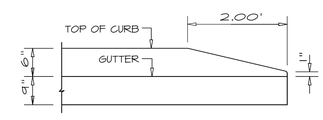

CURB TERMINATION DETAIL
NOT TO SCALE

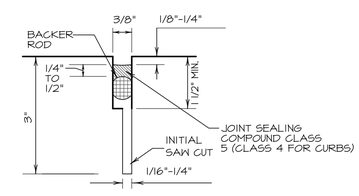

SAWED JOINTS
NOT TO SCALE

THE SEAL APPEARING ON THIS DOCUMENT WAS AUTHORIZED BY KAYLA R. WOOD, P.E. NO. 104859 ON 3/12/14. ALTERATION OF A SEALED DOCUMENT WITHOUT PRIOR NOTIFICATION TO THE RESPONSIBLE ENGINEER IS AN OFFENSE UNDER THE TEXAS ENGINEERING PRACTICE ACT.

STATE OF TEXAS
KAYLA R. WOOD
104859
REGISTERED
PROFESSIONAL ENGINEER

REVISIONS | DATE
1
2
3
4

MTG engineers & surveyors
TBPE FIRM F-1439
TBPLS FIRM 10194300
9480 SUMMERHILL RD., P.O. BOX 3166
TEXARKANA, TEXAS 75504
P. 903.838.0393 F. 903.832.1700
www.mtgengineers.com

PROJECT: UNIVERSITY PH IV
DATE: 2/28/14
DESIGNED BY
CHECKED BY
APPROVED BY

TYPICAL SECTIONS

PHASE IV UNIVERSITY
DEPART. OF ENGINEER & INFRASTRUCTURE
CITY OF TEXARKANA, TEXAS

DRAWING
SHEET 2
OF 50

X:\2011 Projects\116019 University Ave Phase 4, City of Texarkana, TX\05 Engineering Design\2014 Design\Design_07.pro
Wed Mar 12, 2014 9:35AM

LEGEND

RIGHT-OF-WAY / PROPERTY LINE	W	WATER MAIN		ROCK FILTER DAM	G	GAS MAIN
EASEMENT LINE	S	SEWER MAIN (TO BE REMOVED)		TOP OF BANK / SLOPE		EXISTING SANITARY SEWER MANHOLE
ROAD CENTER LINE	W	WATER MAIN (TO BE REMOVED)		TOE OF SLOPE		PROPOSED SANITARY SEWER MANHOLE
OE	OVERHEAD ELECTRIC LINE		RETAINING WALL	UE	PROPOSED ELECTRIC CONDUIT	POWER POLE
S	SEWER FORCE MAIN		TREE LINE	310	PROPOSED CONTOUR	PROPOSED LIGHT POLE
S	SEWER MAIN		SILT FENCE	310	EXISTING CONTOUR	

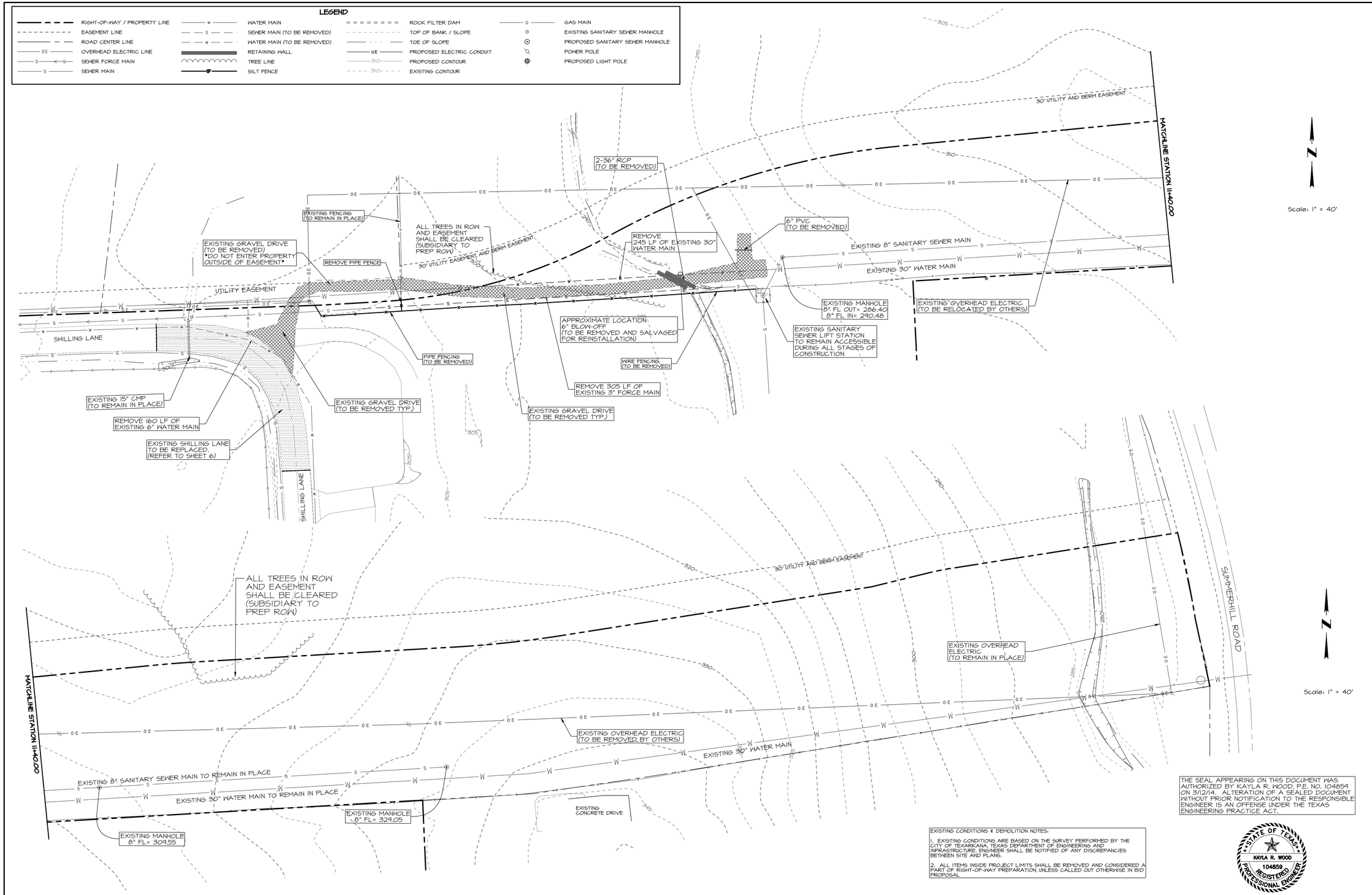

THE SEAL APPEARING ON THIS DOCUMENT WAS AUTHORIZED BY KAYLA R. WOOD, P.E. NO. 104859 ON 3/12/14. ALTERATION OF A SEALED DOCUMENT WITHOUT PRIOR NOTIFICATION TO THE RESPONSIBLE ENGINEER IS AN OFFENSE UNDER THE TEXAS ENGINEERING PRACTICE ACT.

STATE OF TEXAS
KAYLA R. WOOD
104859
REGISTERED PROFESSIONAL ENGINEER

EXISTING CONDITIONS & DEMOLITION NOTES:

1. EXISTING CONDITIONS ARE BASED ON THE SURVEY PERFORMED BY THE CITY OF TEXARKANA, TEXAS DEPARTMENT OF ENGINEERING AND INFRASTRUCTURE. ENGINEER SHALL BE NOTIFIED OF ANY DISCREPANCIES BETWEEN SITE AND PLANS.

2. ALL ITEMS INSIDE PROJECT LIMITS SHALL BE REMOVED AND CONSIDERED A PART OF RIGHT-OF-WAY PREPARATION, UNLESS CALLED OUT OTHERWISE IN BID PROPOSAL.

REVISIONS | DATE
1
2
3
4

MTG engineers & surveyors
TBPE FIRM F-1439
TBPLS FIRM 10194192
9480 SUMMERHILL RD., P.O. BOX 3186
TEXARKANA, TEXAS 75504
P. 903.838.4939 F. 903.832.1700
www.mtgengineers.com

PROJECT: UNIVERSITY PH IV
DATE: 2/28/14
DESIGNED BY
CHECKED BY
APPROVED BY

EXISTING CONDITIONS & DEMOLITION PLAN

PHASE IV UNIVERSITY

DEPART. OF ENGINEER & INFRASTRUCTURE
CITY OF TEXARKANA, TEXAS

DRAWING
SHEET 3 OF 50

X:\2011 Projects\116019 University Ave Phase 4, City of Texarkana, TX\05 Engineering Design\2014 Design\Design_07.pro
Wed Mar 12, 2014 9:36AM

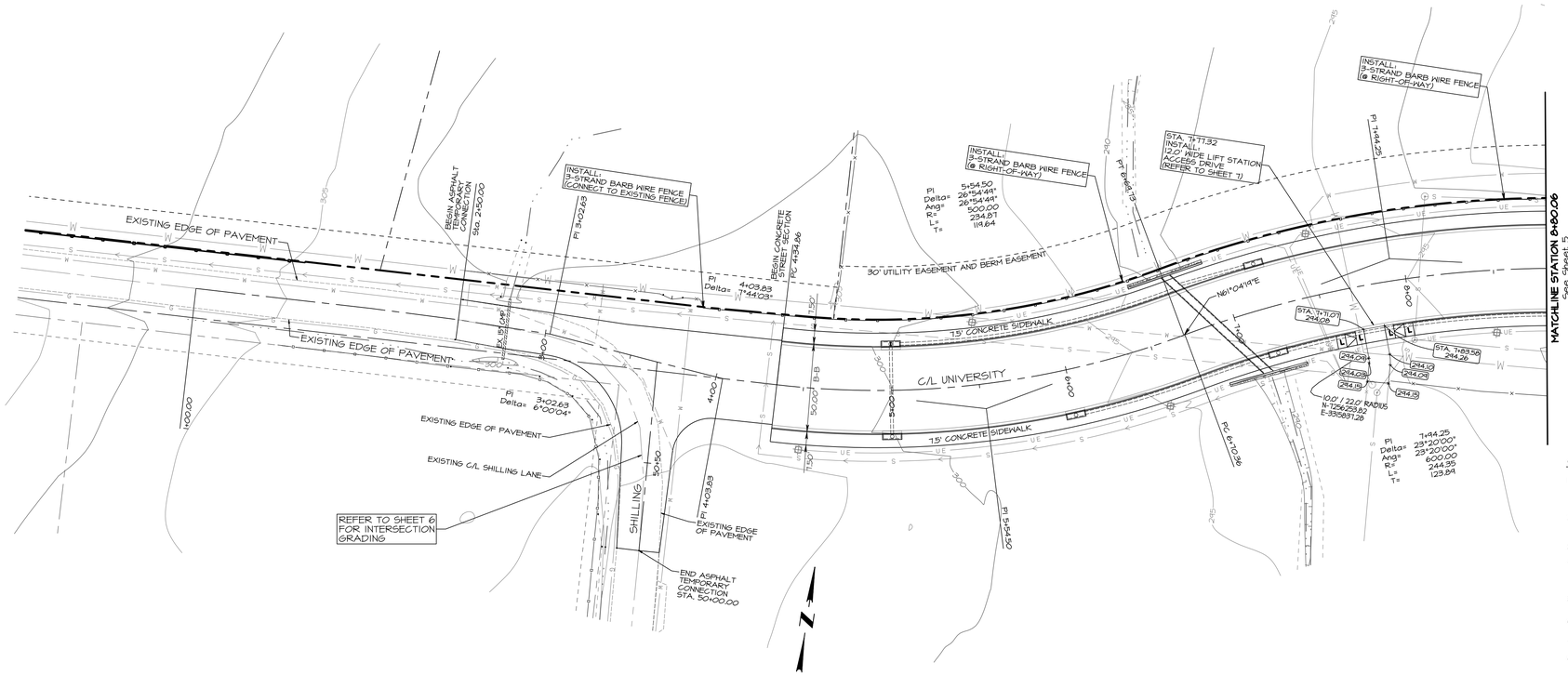

PLAN VIEW

Scale: 1" = 40'

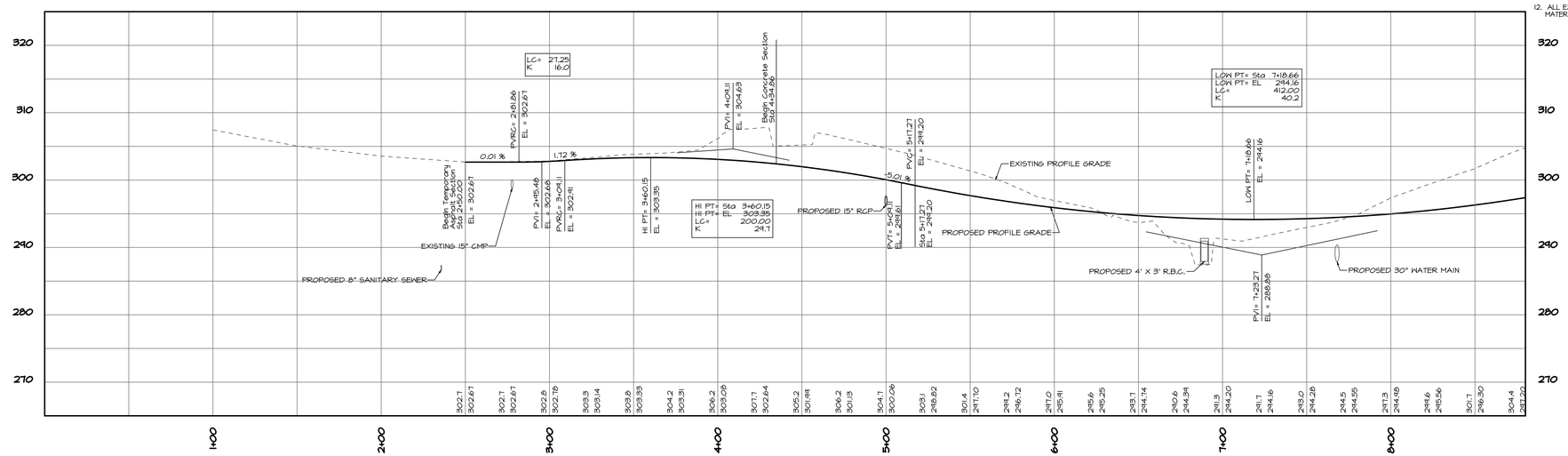

PROFILE VIEW

Horizontal Scale: 1" = 40'
Vertical Scale: 1" = 10'

LEGEND

- RIGHT-OF-WAY / PROPERTY LINE
- EASEMENT LINE
- ROAD CENTER LINE
- OVERHEAD ELECTRIC LINE
- SEWER FORCE MAIN
- SEWER MAIN
- WATER MAIN
- SEWER MAIN (TO BE REMOVED)
- WATER MAIN (TO BE REMOVED)
- RETAINING WALL
- SILT FENCE
- ROCK FILTER DAM
- TOP OF BANK / SLOPE
- TOE OF SLOPE
- PROPOSED ELECTRIC CONDUIT
- PROPOSED CONTOUR
- GAS MAIN
- STORM DRAIN
- EXISTING SANITARY SEWER MANHOLE
- PROPOSED SANITARY SEWER MANHOLE
- POWER POLE
- PROPOSED LIGHT POLE

GENERAL NOTES:

1. CONTRACTOR SHALL FIELD VERIFY HORIZONTAL AND VERTICAL LOCATION OF ALL EXISTING AND PLANNED UTILITIES BEFORE CONSTRUCTION. CONTRACTOR IS RESPONSIBLE FOR PROTECTING EXISTING UTILITIES (SHOWN OR NOT SHOWN) WITHIN SCOPE OF CONSTRUCTION. IF ANY EXISTING UTILITIES ARE DAMAGED, THE CONTRACTOR SHALL REPLACE THEM AT HIS OWN EXPENSE.
2. CONTRACTOR SHALL NOTIFY THE APPROPRIATE AGENCY A MINIMUM OF 2 WORKING DAYS PRIOR TO BEGINNING CONSTRUCTION WITHIN RIGHT-OF-WAY. ALL WORK WITHIN THE RIGHT OF WAY SHALL BE IN COMPLIANCE WITH APPROVED PERMIT.
3. DIMENSIONS SHOWN ARE FROM BACK OF CURB.
4. THE CONTRACTOR IS RESPONSIBLE FOR REMOVING ANY OBSTRUCTIONS SUCH AS EXISTING STRUCTURES, FENCES, DEBRIS, OR TREES ON SITE, AND SHALL COORDINATE ALL REMOVAL WITH THE GENERAL CONTRACTOR. REMOVAL ITEMS ARE SUBSIDIARY TO PREP RIGHT-OF-WAY. NO TREES OR OTHER ITEMS SHALL BE REMOVED WITHOUT THE APPROVAL OF THE ENGINEER, AND OWNER.
5. THE CONTRACTOR SHALL PROTECT ALL EXISTING POWER POLES, SIGNS, MANHOLES, TELEPHONE RISERS, WATER VALVES, ETC. DURING ALL CONSTRUCTION PHASES.
6. VEGETATION, DEBRIS, AND TOPSOIL CONTAINING ORGANIC MATERIALS SHOULD BE CLEARED AND GRUBBED FROM THE ENTIRE SITE AT THE BEGINNING OF EARTHWORK.
7. REFERENCE PLAN SHEETS AND GEOTECHNICAL REPORT FOR PAVEMENT SUBGRADE PREPARATION REQUIREMENTS.
8. PROPOSED CONTOURS AND SPOT ELEVATIONS SHOWN IN PAVED AREAS REFLECT TOP OF PAVEMENT SURFACE OR GUTTER GRADES UNLESS OTHERWISE NOTED.
9. ALL ACCESSIBLE PATHWAYS SHALL BE CONSTRUCTED IN COMPLIANCE WITH ADA AND TDLR STANDARDS.
10. THE CONTRACTOR SHALL MAINTAIN SITE DRAINAGE DURING ALL PHASES OF CONSTRUCTION.
11. THE CONTRACTOR SHALL TAKE ALL AVAILABLE PRECAUTIONS TO CONTROL DUST. CONTRACTOR SHALL CONTROL DUST BY SPRINKLING WATER, OR BY OTHER MEANS APPROVED BY THE ENGINEER, AND THE OWNER, AT NO ADDITIONAL COST TO THE OWNER.
12. ALL EXCAVATION IS UNCLASSIFIED AND SHALL INCLUDE ALL MATERIALS ENCOUNTERED. UNUSABLE EXCAVATED MATERIAL AND ALL WASTE SHALL BE DISPOSED OF OFF SITE.

THE SEAL APPEARING ON THIS DOCUMENT WAS AUTHORIZED BY KAYLA R. WOOD, P.E. NO. 104859 ON 3/12/14. ALTERATION OF A SEALED DOCUMENT WITHOUT PRIOR NOTIFICATION TO THE RESPONSIBLE ENGINEER IS AN OFFENSE UNDER THE TEXAS ENGINEERING PRACTICE ACT.

STATE OF TEXAS
KAYLA R. WOOD
104859
REGISTERED PROFESSIONAL ENGINEER

REVISIONS	DATE
1	
2	
3	
4	

MTG engineers & surveyors
TBPE FIRM F-10164 TBPLS FIRM 10194
9480 SH-6 BRYAN RD., P.O. BOX 3166 BRYAN, TEXAS 77805
P. 979.268.0393 F. 979.268.0700
www.mtgengineers.com

PROJECT: UNIVERSITY PH IV
DATE: 2/28/14
DESIGNED BY
CHECKED BY
APPROVED BY

STREET PLAN & PROFILE

PHASE IV UNIVERSITY

DEPART. OF ENGINEER & INFRASTRUCTURE
CITY OF TEXARKANA, TEXAS

DRAWING

SHEET 4 OF 50

X:\2011 Projects\116019 University Ave Phase 4, City of Texarkana, TX\05 Engineering Design\Design\2014 Design\Design_07.pro
Wed Mar 12, 2014 9:37AM

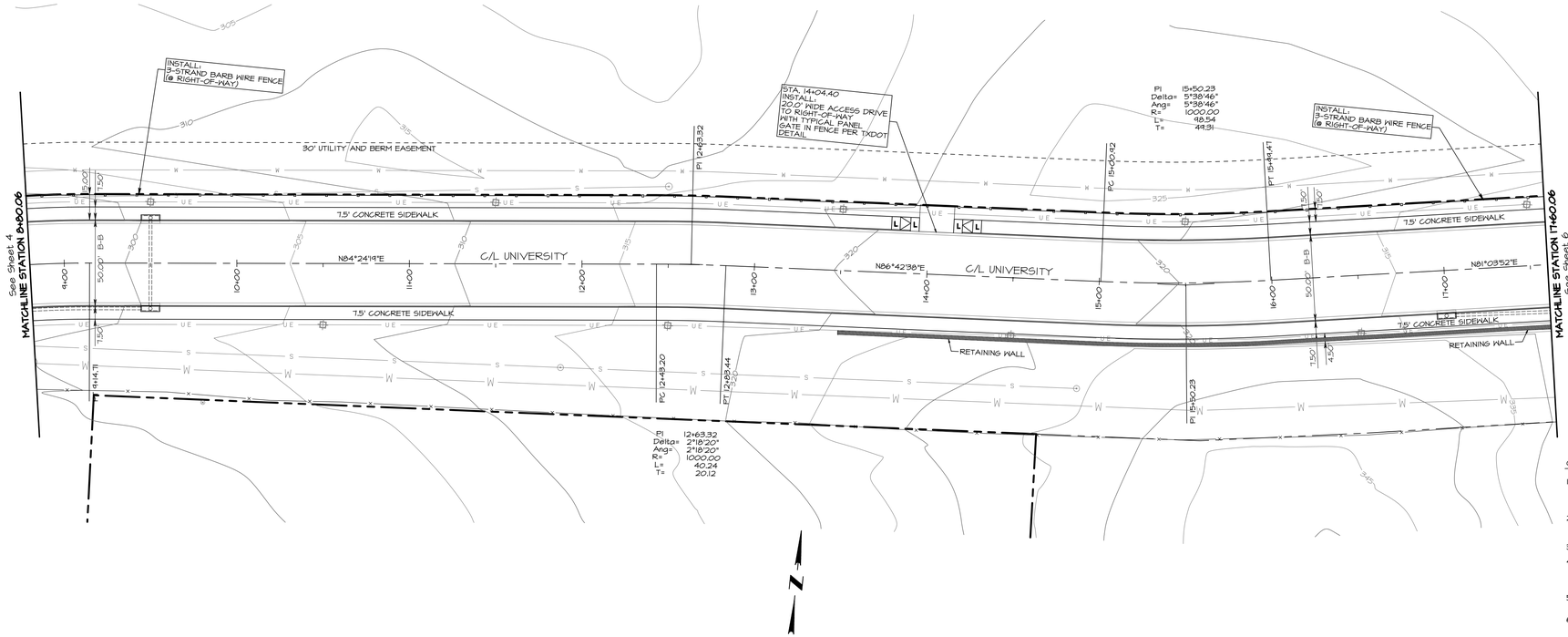

PLAN VIEW

Scale: 1" = 40'

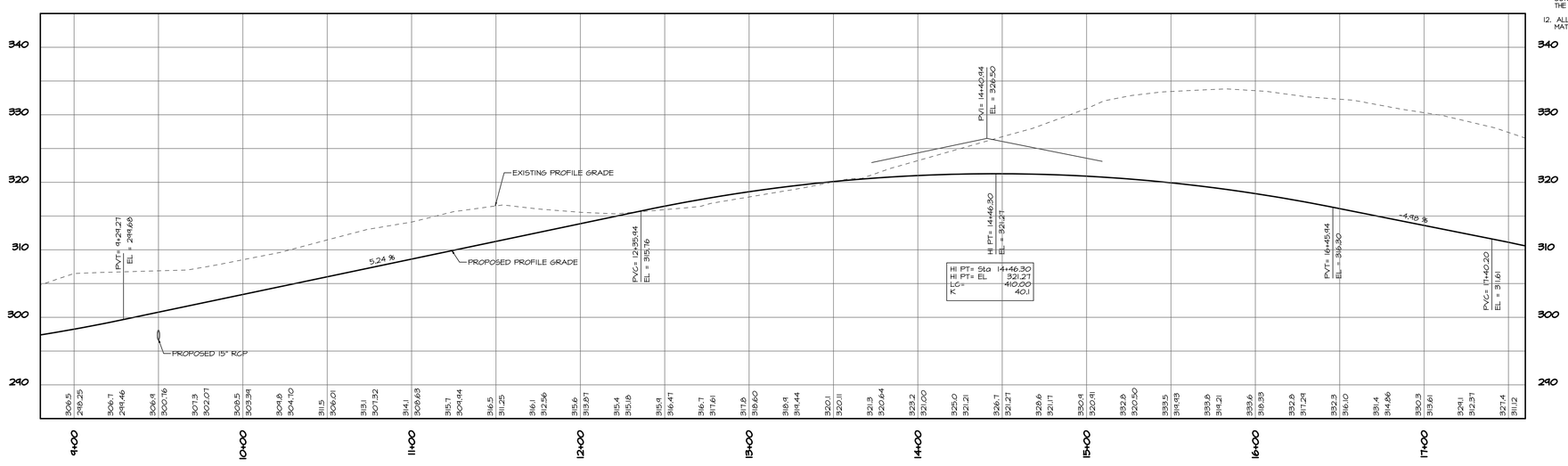

PROFILE VIEW

Horizontal Scale: 1" = 40'
Vertical Scale: 1" = 10'

LEGEND

- RIGHT-OF-WAY / PROPERTY LINE
- EASEMENT LINE
- ROAD CENTER LINE
- OVERHEAD ELECTRIC LINE
- SEWER FORCE MAIN
- SEWER MAIN
- WATER MAIN
- SEWER MAIN (TO BE REMOVED)
- WATER MAIN (TO BE REMOVED)
- RETAINING WALL
- SILT FENCE
- ROCK FILTER DAM
- TOP OF BANK / SLOPE
- TOE OF SLOPE
- PROPOSED ELECTRIC CONDUIT
- PROPOSED CONTOUR
- GAS MAIN
- STORM DRAIN
- EXISTING SANITARY SEWER MANHOLE
- PROPOSED SANITARY SEWER MANHOLE
- POWER POLE
- PROPOSED LIGHT POLE

GENERAL NOTES:

1. CONTRACTOR SHALL FIELD VERIFY HORIZONTAL AND VERTICAL LOCATION OF ALL EXISTING AND PLANNED UTILITIES BEFORE CONSTRUCTION. CONTRACTOR IS RESPONSIBLE FOR PROTECTING EXISTING UTILITIES (SHOWN OR NOT SHOWN) WITHIN SCOPE OF CONSTRUCTION. IF ANY EXISTING UTILITIES ARE DAMAGED, THE CONTRACTOR SHALL REPLACE THEM AT HIS OWN EXPENSE.
2. CONTRACTOR SHALL NOTIFY THE APPROPRIATE AGENCY A MINIMUM OF 2 WORKING DAYS PRIOR TO BEGINNING CONSTRUCTION WITHIN RIGHT-OF-WAY. ALL WORK WITHIN THE RIGHT OF WAY SHALL BE IN COMPLIANCE WITH APPROVED PERMIT.
3. DIMENSIONS SHOWN ARE FROM BACK OF CURB.
4. THE CONTRACTOR IS RESPONSIBLE FOR REMOVING ANY OBSTRUCTIONS SUCH AS EXISTING STRUCTURES, FENCES, DEBRIS, OR TREES ON SITE, AND SHALL COORDINATE ALL REMOVAL WITH THE GENERAL CONTRACTOR. REMOVAL ITEMS ARE SUBSIDIARY TO PREP RIGHT-OF-WAY.
   NO TREES OR OTHER ITEMS SHALL BE REMOVED WITHOUT THE APPROVAL OF THE ENGINEER, AND OWNER.
5. THE CONTRACTOR SHALL PROTECT ALL EXISTING POWER POLES, SIGNS, MANHOLES, TELEPHONE RISERS, WATER VALVES, ETC. DURING ALL CONSTRUCTION PHASES.
6. VEGETATION, DEBRIS, AND TOPSOIL CONTAINING ORGANIC MATERIALS SHOULD BE CLEARED AND GRUBBED FROM THE ENTIRE SITE AT THE BEGINNING OF EARTHWORK.
7. REFERENCE PLAN SHEETS AND GEOTECHNICAL REPORT FOR PAVEMENT SUBGRADE PREPARATION REQUIREMENTS.
8. PROPOSED CONTOURS AND SPOT ELEVATIONS SHOWN IN PAVED AREAS REFLECT TOP OF PAVEMENT SURFACE OR GUTTER GRADES UNLESS OTHERWISE NOTED.
9. ALL ACCESSIBLE PATHWAYS SHALL BE CONSTRUCTED IN COMPLIANCE WITH ADA AND TDLR STANDARDS.
10. THE CONTRACTOR SHALL MAINTAIN SITE DRAINAGE DURING ALL PHASES OF CONSTRUCTION.
11. THE CONTRACTOR SHALL TAKE ALL AVAILABLE PRECAUTIONS TO CONTROL DUST. CONTRACTOR SHALL CONTROL DUST BY SPRINKLING WATER, OR BY OTHER MEANS APPROVED BY THE ENGINEER, AND THE OWNER, AT NO ADDITIONAL COST TO THE OWNER.
12. ALL EXCAVATION IS UNCLASSIFIED AND SHALL INCLUDE ALL MATERIALS ENCOUNTERED. UNUSABLE EXCAVATED MATERIAL AND ALL WASTE SHALL BE DISPOSED OF OFF SITE.

THE SEAL APPEARING ON THIS DOCUMENT WAS AUTHORIZED BY KAYLA R. WOOD, P.E. NO. 104859 ON 3/12/14. ALTERATION OF A SEALED DOCUMENT WITHOUT PRIOR NOTIFICATION TO THE RESPONSIBLE ENGINEER IS AN OFFENSE UNDER THE TEXAS ENGINEERING PRACTICE ACT.

STATE OF TEXAS
KAYLA R. WOOD
104859
REGISTERED PROFESSIONAL ENGINEER

REVISIONS	DATE
1	
2	
3	
4	

MTG engineers & surveyors
TBPE FIRM F-10164
TBPLS FIRM 10194100
9480 SH-6 BRYAN RD., P.O. BOX 3166
BRYAN, TEXAS 77805-3166
P. 979.268.0293 F. 979.268.0021
www.mtgengineers.com

PROJECT: UNIVERSITY PH IV
DATE: 2/28/14
DESIGNED BY:
CHECKED BY:
APPROVED BY:

STREET PLAN & PROFILE

PHASE IV UNIVERSITY

DEPART. OF ENGINEER & INFRASTRUCTURE
CITY OF TEXARKANA, TEXAS

DRAWING
SHEET 5 OF 50

X:\2011 Projects\116019 University Ave Phase 4, City of Texarkana, TX\05 Engineering Design\2014 Design\Design_07.pro
Wed Mar 12, 2014 9:37AM

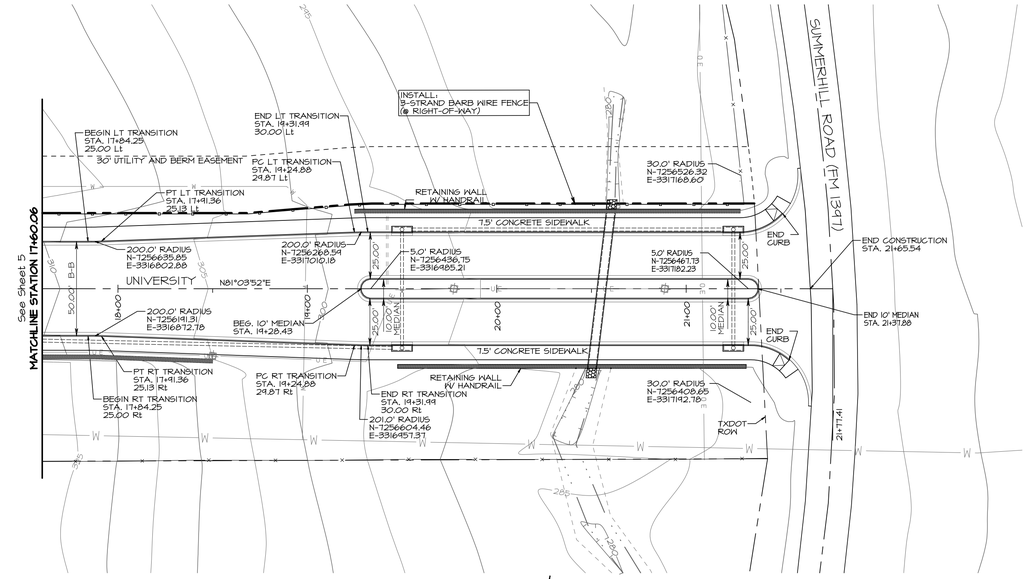

PLAN VIEW

Scale: 1" = 40'

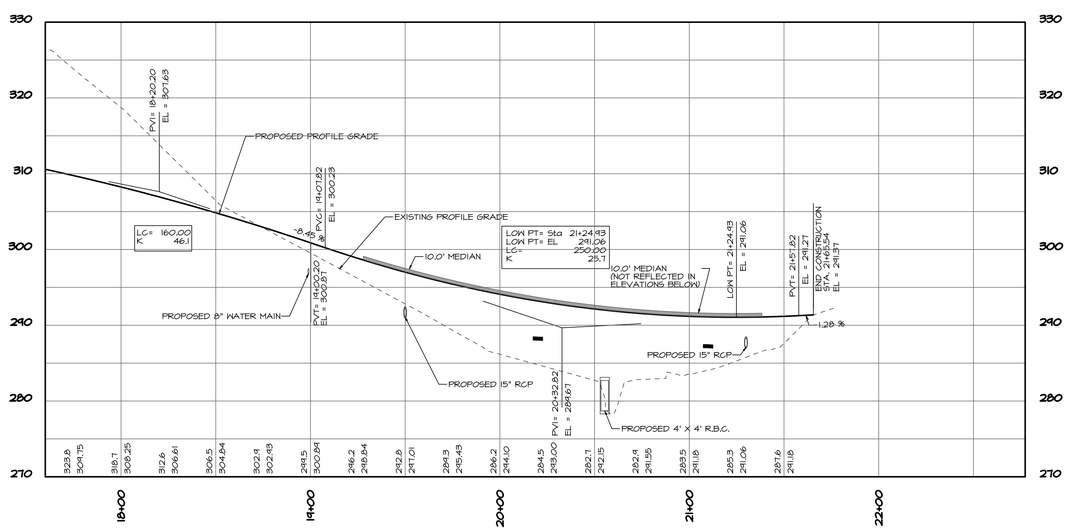

PROFILE VIEW

Horizontal Scale: 1" = 40'
Vertical Scale: 1" = 10'

GENERAL NOTES:

1. CONTRACTOR SHALL FIELD VERIFY HORIZONTAL AND VERTICAL LOCATION OF ALL EXISTING AND PLANNED UTILITIES BEFORE CONSTRUCTION. CONTRACTOR IS RESPONSIBLE FOR PROTECTING EXISTING UTILITIES (SHOWN OR NOT SHOWN) WITHIN SCOPE OF CONSTRUCTION. IF ANY EXISTING UTILITIES ARE DAMAGED, THE CONTRACTOR SHALL REPLACE THEM AT HIS OWN EXPENSE.
2. CONTRACTOR SHALL NOTIFY THE APPROPRIATE AGENCY A MINIMUM OF 2 WORKING DAYS PRIOR TO BEGINNING CONSTRUCTION WITHIN RIGHT-OF-WAY. ALL WORK WITHIN THE RIGHT OF WAY SHALL BE IN COMPLIANCE WITH APPROVED PERMIT.
3. DIMENSIONS SHOWN ARE FROM BACK OF CURB.
4. THE CONTRACTOR IS RESPONSIBLE FOR REMOVING ANY OBSTRUCTIONS SUCH AS EXISTING STRUCTURES, FENCES, DEBRIS, OR TREES ON SITE, AND SHALL COORDINATE ALL REMOVAL WITH THE GENERAL CONTRACTOR. REMOVAL ITEMS ARE SUBSIDIARY TO PREP RIGHT-OF-WAY.
   NO TREES OR OTHER ITEMS SHALL BE REMOVED WITHOUT THE APPROVAL OF THE ENGINEER, AND OWNER.
5. THE CONTRACTOR SHALL PROTECT ALL EXISTING POWER POLES, SIGNS, MANHOLES, TELEPHONE RISERS, WATER VALVES, ETC. DURING ALL CONSTRUCTION PHASES.
6. VEGETATION, DEBRIS, AND TOPSOIL CONTAINING ORGANIC MATERIALS SHOULD BE CLEARED AND GRUBBED FROM THE ENTIRE SITE AT THE BEGINNING OF EARTHWORK.
7. REFERENCE PLAN SHEETS AND GEOTECHNICAL REPORT FOR PAVEMENT SUBGRADE PREPARATION REQUIREMENTS.
8. PROPOSED CONTOURS AND SPOT ELEVATIONS SHOWN IN PAVED AREAS REFLECT TOP OF PAVEMENT SURFACE OR GUTTER GRADES UNLESS OTHERWISE NOTED.
9. ALL ACCESSIBLE PATHWAYS SHALL BE CONSTRUCTED IN COMPLIANCE WITH ADA AND TDLR STANDARDS.
10. THE CONTRACTOR SHALL MAINTAIN SITE DRAINAGE DURING ALL PHASES OF CONSTRUCTION.
11. THE CONTRACTOR SHALL TAKE ALL AVAILABLE PRECAUTIONS TO CONTROL DUST. CONTRACTOR SHALL CONTROL DUST BY SPRINKLING WATER, OR BY OTHER MEANS APPROVED BY THE ENGINEER, AND THE OWNER, AT NO ADDITIONAL COST TO THE OWNER.
12. ALL EXCAVATION IS UNCLASSIFIED AND SHALL INCLUDE ALL MATERIALS ENCOUNTERED. UNUSABLE EXCAVATED MATERIAL AND ALL WASTE SHALL BE DISPOSED OF OFF SITE.

LEGEND

- RIGHT-OF-WAY / PROPERTY LINE
- EASEMENT LINE
- ROAD CENTER LINE
- OVERHEAD ELECTRIC LINE
- SEWER FORCE MAIN
- SEWER MAIN
- WATER MAIN
- SEWER MAIN (TO BE REMOVED)
- WATER MAIN (TO BE REMOVED)
- RETAINING WALL
- SILT FENCE
- ROCK FILTER DAM
- TOP OF BANK / SLOPE
- TOE OF SLOPE
- PROPOSED ELECTRIC CONDUIT
- PROPOSED CONTOUR
- GAS MAIN
- STORM DRAIN
- EXISTING SANITARY SEWER MANHOLE
- PROPOSED SANITARY SEWER MANHOLE
- POWER POLE
- PROPOSED LIGHT POLE

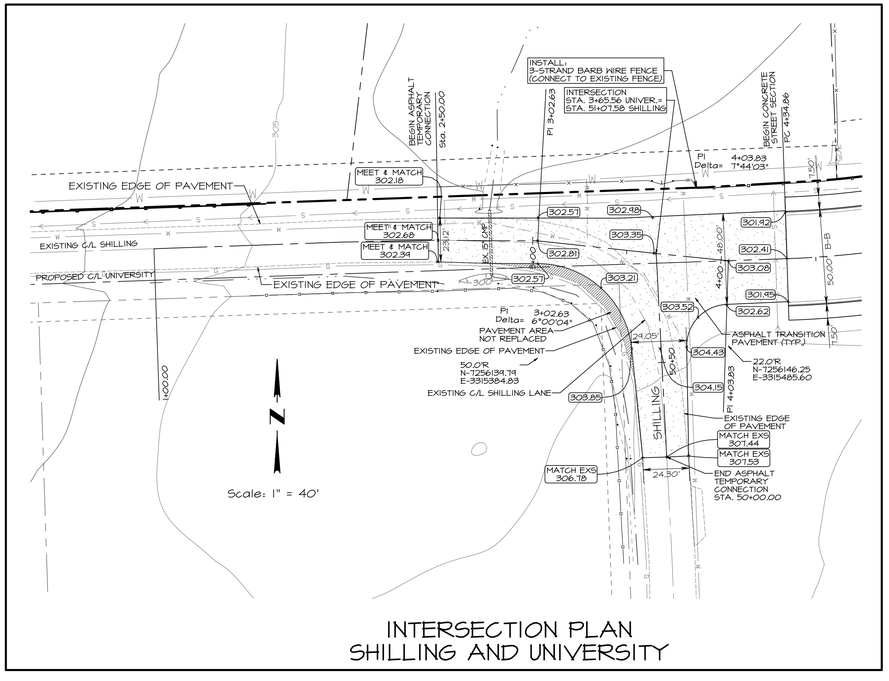

INTERSECTION PLAN
SHILLING AND UNIVERSITY

THE SEAL APPEARING ON THIS DOCUMENT WAS AUTHORIZED BY KAYLA R. WOOD, P.E. NO. 104859 ON 3/12/14. ALTERATION OF A SEALED DOCUMENT WITHOUT PRIOR NOTIFICATION TO THE RESPONSIBLE ENGINEER IS AN OFFENSE UNDER THE TEXAS ENGINEERING PRACTICE ACT.

STATE OF TEXAS
KAYLA R. WOOD
104859
REGISTERED
PROFESSIONAL ENGINEER

REVISIONS	DATE
1	
2	
3	
4	

MTG Engineers & Surveyors
TBPE FIRM F-10928 TBPLS FIRM 10194300
9480 SUMMERHILL RD., P.O. BOX 3166
TEXARKANA, TEXAS 75504
P 903.838.0333 F 903.832.1700
www.mtgengineers.com

PROJECT	UNIVERSITY PH IV
DATE	2/28/14
DESIGNED BY	
CHECKED BY	
APPROVED BY	

STREET PLAN & PROFILE

PHASE IV UNIVERSITY

DEPART. OF ENGINEER & INFRASTRUCTURE
CITY OF TEXARKANA, TEXAS

DRAWING

SHEET 6
OF 50

X:\2011 Projects\116019 University Ave Phase 4, City of Texarkana, TX\05 Engineering Design\2014 Design\Design_07.pro
Wed Mar 12, 2014 9:39AM

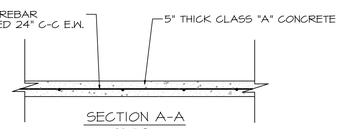

SECTION A-A
N.T.S.

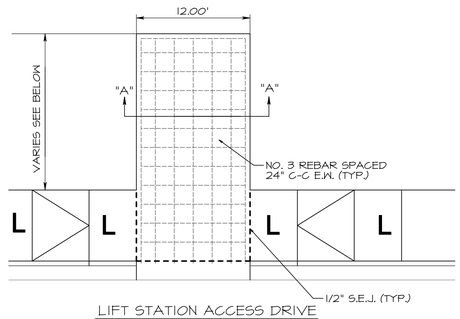

LIFT STATION ACCESS DRIVE
REINFORCEMENT
N.T.S.

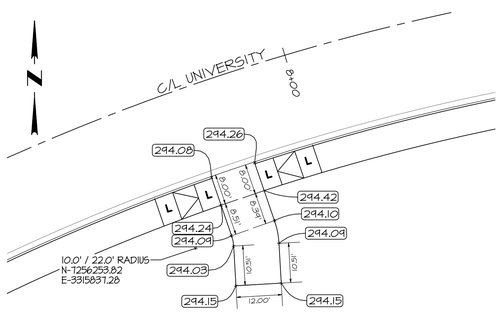

LIFT STATION ACCESS DRIVE
SCALE: 1"=20'

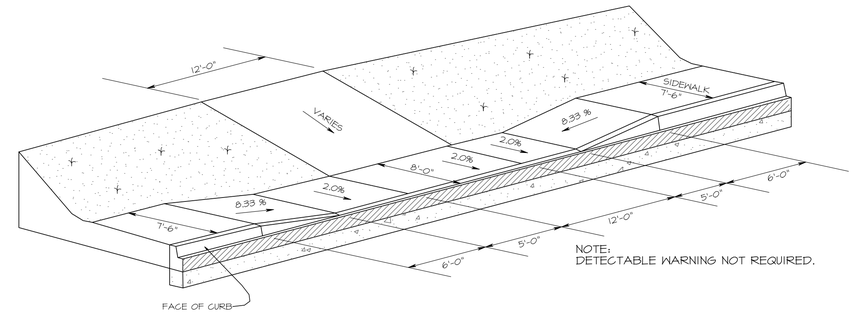

NOTE:
DETECTABLE WARNING NOT REQUIRED.

ELEVATION

TYPICAL 5" CONCRETE DRIVE DETAIL
(WITH SIDEWALK)
SCALE: NONE

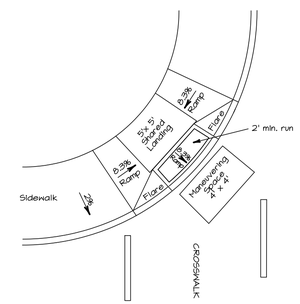

DIAGONAL CURB RAMP
Perpendicular to the Tangent of the Curb Radius and Contained in Crosswalk

Note: Detectable warnings are required.

Detectable Warning Material:

1. Curb ramps must contain a detectable warning surface that consists of raised truncated domes complying with Section 705 of the TAS. The surface must contrast visually with adjoining surfaces, including side flares. Furnish and install an approved cast-in-place yellow (or as directed by Engineer) warning surface material adjacent to uncolored concrete, unless specified elsewhere in the plans.

2. Detectable Warning Materials must meet TxDOT Departmental Materials Specification DMS 4350 and be listed on the Material Producer List. Install products in accordance with manufacturer's specifications.

3. Detectable warning surfaces must be slip resistant and not allow water to accumulate.

4. Detectable warning surfaces shall be a minimum of 24" in depth in the direction of pedestrian travel, and extend the full width of the curb ramp or landing where the pedestrian access route enters the street.

5. Detectable warning surfaces shall be located so that the edge nearest the curb line is at the back of curb. Align the rows of domes to be perpendicular to the grade break between the ramp run and the street. Detectable warning surfaces may be curved along the corner radius.

6. Shaded areas on details indicate the approximate location for the detectable warning surface for each curb ramp.

Detectable Warning Pavers:

1. Furnish detectable warning paver units meeting all requirements of ASTM C-936, C-33.

2. Lay in a two by two unit basket weave pattern or as directed. Lay full-size units first followed by closure units consisting of at least 25 percent of a full unit. Cut detectable warning paver units using a power saw.

THE SEAL APPEARING ON THIS DOCUMENT WAS AUTHORIZED BY KAYLA R. WOOD, P.E. NO. 104859 ON 3/12/14. ALTERATION OF A SEALED DOCUMENT WITHOUT PRIOR NOTIFICATION TO THE RESPONSIBLE ENGINEER IS AN OFFENSE UNDER THE TEXAS ENGINEERING PRACTICE ACT.

REVISIONS | DATE
1
2
3
4

MTG engineers & surveyors
TBPE FIRM F-1704
TBPLS FIRM 10194700
9480 SH-6 BRYAN RD., P.O. BOX 3166
BRYAN, TEXAS 77807-3166
P. 979.268.0293 F. 979.268.0212
www.mtgengineers.com

PROJECT: UNIVERSITY PH IV
DATE: 2/28/14
DESIGNED BY
CHECKED BY
APPROVED BY

CURB RAMP AND DRIVEWAY DETAILS

PHASE IV UNIVERSITY

DEPART. OF ENGINEER & INFRASTRUCTURE
CITY OF TEXARKANA, TEXAS

DRAWING
SHEET 7
OF 50

X:\2011 Projects\116019 University Ave Phase 4, City of Texarkana, TX\05 Engineering Design\2014 Design\Design_07.pro
Wed Mar 12, 2014 9:39AM

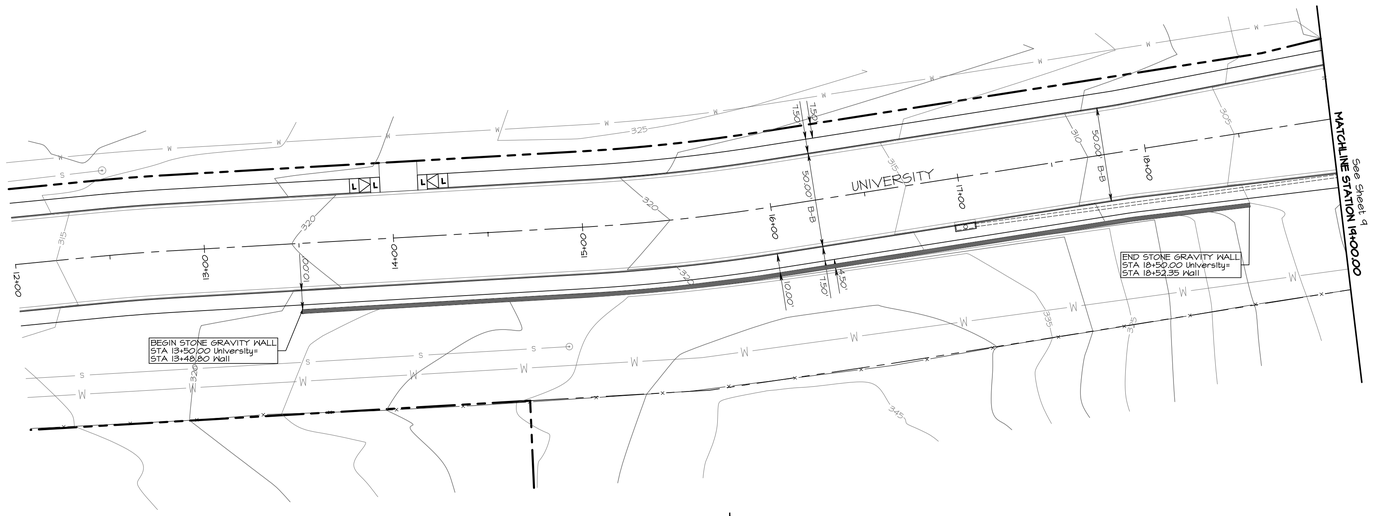

N

PLAN VIEW

Scale: 1" = 40'

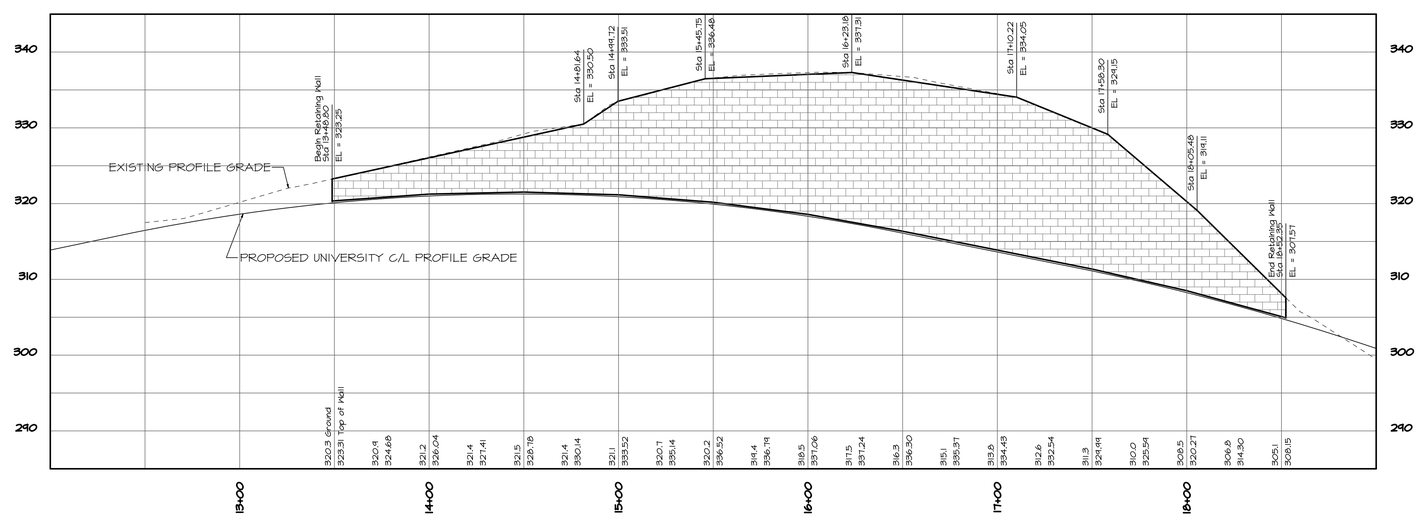

PROFILE VIEW

Horizontal Scale: 1" = 40'
Vertical Scale: 1" = 10'

NOTE:
RETAINING WALL SHALL BE A STONE GRAVITY WALL WITH A NATURAL STONE FACE. REFER TO SHEETS: SP1, RW1, AND RW2 FOR PERMIT DRAWINGS. SIGNED CONSTRUCTION DRAWINGS SHALL BE SUBMITTED FOR APPROVAL.

THE SEAL APPEARING ON THIS DOCUMENT WAS AUTHORIZED BY KAYLA R. WOOD, P.E. NO. 104859 ON 3/12/14. ALTERATION OF A SEALED DOCUMENT WITHOUT PRIOR NOTIFICATION TO THE RESPONSIBLE ENGINEER IS AN OFFENSE UNDER THE TEXAS ENGINEERING PRACTICE ACT.

STATE OF TEXAS
KAYLA R. WOOD
104859
REGISTERED
PROFESSIONAL ENGINEER

LEGEND

- RIGHT-OF-WAY / PROPERTY LINE
- EASEMENT LINE
- ROAD CENTER LINE
- OVERHEAD ELECTRIC LINE
- SEWER FORCE MAIN
- SEWER MAIN
- WATER MAIN
- SEWER MAIN (TO BE REMOVED)
- WATER MAIN (TO BE REMOVED)
- RETAINING WALL
- SILT FENCE
- ROCK FILTER DAM
- TOP OF BANK / SLOPE
- TOE OF SLOPE
- PROPOSED ELECTRIC CONDUIT
- PROPOSED CONTOUR
- GAS MAIN
- STORM DRAIN
- EXISTING SANITARY SEWER MANHOLE
- PROPOSED SANITARY SEWER MANHOLE
- POWER POLE
- PROPOSED LIGHT POLE

REVISIONS | DATE
1
2
3
4

MTG engineers & surveyors
TBPE FIRM F-1439
TBPLS FIRM 10194000
9480 S.H. 6 DRILL RD., P.O. BOX 3186
BRYAN, TEXAS 77805
P. 979.268.1933 F. 979.268.1700
www.mtgengineers.com

PROJECT: UNIVERSITY PH IV
DATE: 2/28/14
DESIGNED BY
CHECKED BY
APPROVED BY

RETAINING WALL PLAN & PROFILE

PHASE IV UNIVERSITY

DEPART. OF ENGINEER & INFRASTRUCTURE
CITY OF TEXARKANA, TEXAS

DRAWING
SHEET 8
OF 50

X:\2011 Projects\116019 University Ave Phase 4, City of Texarkana, TX\05 Engineering Design\2014 Design\Design_07.pro
Wed Mar 12, 2014 9:40AM

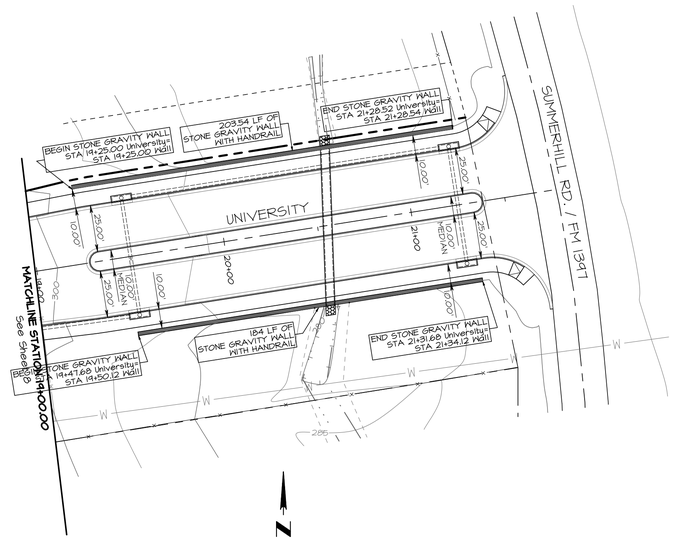

N

PLAN VIEW

Scale: 1" = 40'

LEGEND

- RIGHT-OF-WAY / PROPERTY LINE
- EASEMENT LINE
- ROAD CENTER LINE
- OVERHEAD ELECTRIC LINE
- SEWER FORCE MAIN
- SEWER MAIN
- WATER MAIN
- SEWER MAIN (TO BE REMOVED)
- WATER MAIN (TO BE REMOVED)
- RETAINING WALL
- SILT FENCE
- ROCK FILTER DAM
- TOP OF BANK / SLOPE
- TOE OF SLOPE
- PROPOSED ELECTRIC CONDUIT
- PROPOSED CONTOUR
- GAS MAIN
- STORM DRAIN
- EXISTING SANITARY SEWER MANHOLE
- PROPOSED SANITARY SEWER MANHOLE
- POWER POLE
- PROPOSED LIGHT POLE

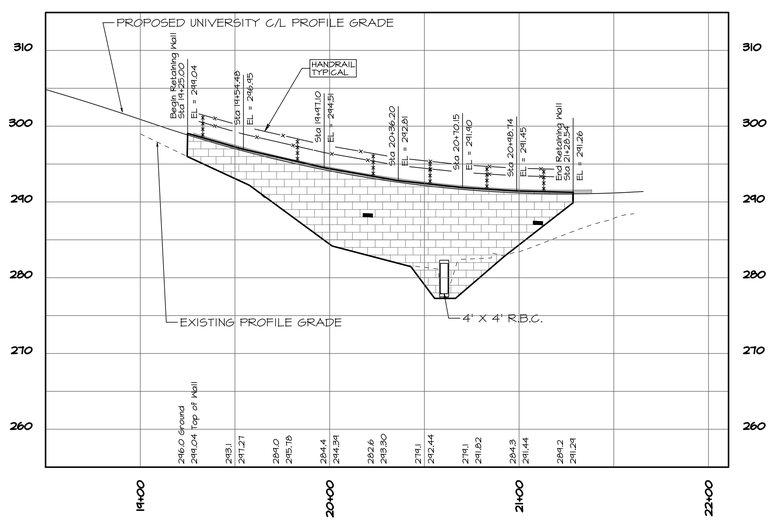

LEFT WALL PROFILE VIEW

Horizontal Scale: 1" = 40'
Vertical Scale: 1" = 10'

NOTE:
RETAINING WALL SHALL BE A STONE GRAVITY WALL WITH A NATURAL STONE FACE. REFER TO SHEETS: SP2, RW1, RW3, AND RW4 FOR PERMIT DRAWINGS. SIGNED CONSTRUCTION DRAWINGS SHALL BE SUBMITTED FOR APPROVAL.

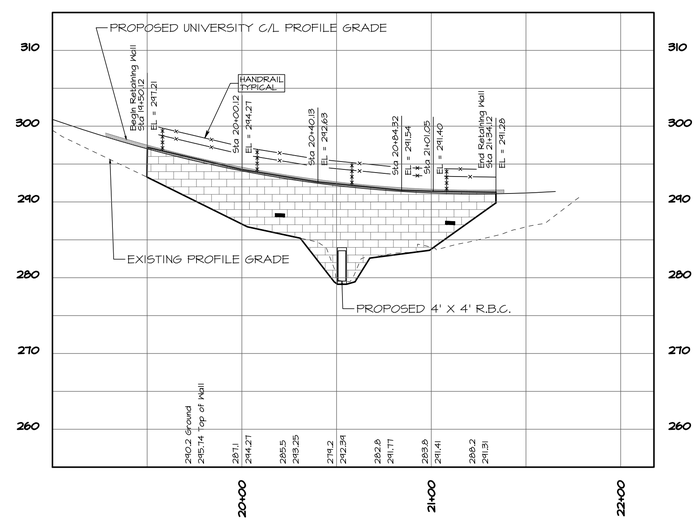

RIGHT WALL PROFILE VIEW

Horizontal Scale: 1" = 40'
Vertical Scale: 1" = 10'

NOTE:
RETAINING WALL SHALL BE A STONE GRAVITY WALL WITH A NATURAL STONE FACE. REFER TO SHEETS: SP2, RW1, RW3, AND RW4 FOR PERMIT DRAWINGS. SIGNED CONSTRUCTION DRAWINGS SHALL BE SUBMITTED FOR APPROVAL.

THE SEAL APPEARING ON THIS DOCUMENT WAS AUTHORIZED BY KAYLA R. WOOD, P.E. NO. 104859 ON 3/12/14. ALTERATION OF A SEALED DOCUMENT WITHOUT PRIOR NOTIFICATION TO THE RESPONSIBLE ENGINEER IS AN OFFENSE UNDER THE TEXAS ENGINEERING PRACTICE ACT.

STATE OF TEXAS
KAYLA R. WOOD
104859
REGISTERED PROFESSIONAL ENGINEER

REVISIONS	DATE
1	
2	
3	
4	

MTG engineers & surveyors
TBPE FIRM F-10928 / TBPLS FIRM 10194000
9480 SUMMERHILL RD., P.O. BOX 3166
TEXARKANA, TEXAS 75504
P. 903.838.4939 F. 903.832.4700
www.mtgengineers.com

PROJECT: UNIVERSITY PH IV
DATE: 2/28/14
DESIGNED BY
CHECKED BY
APPROVED BY

RETAINING WALL PLAN & PROFILE

PHASE IV UNIVERSITY

DEPART. OF ENGINEER & INFRASTRUCTURE
CITY OF TEXARKANA, TEXAS

DRAWING

SHEET 9
OF 50

X:\2011 Projects\116019 University Ave Phase 4, City of Texarkana, TX\05 Engineering Design\2014 Design\Design_07.pro
Wed Mar 12, 2014 9:41AM

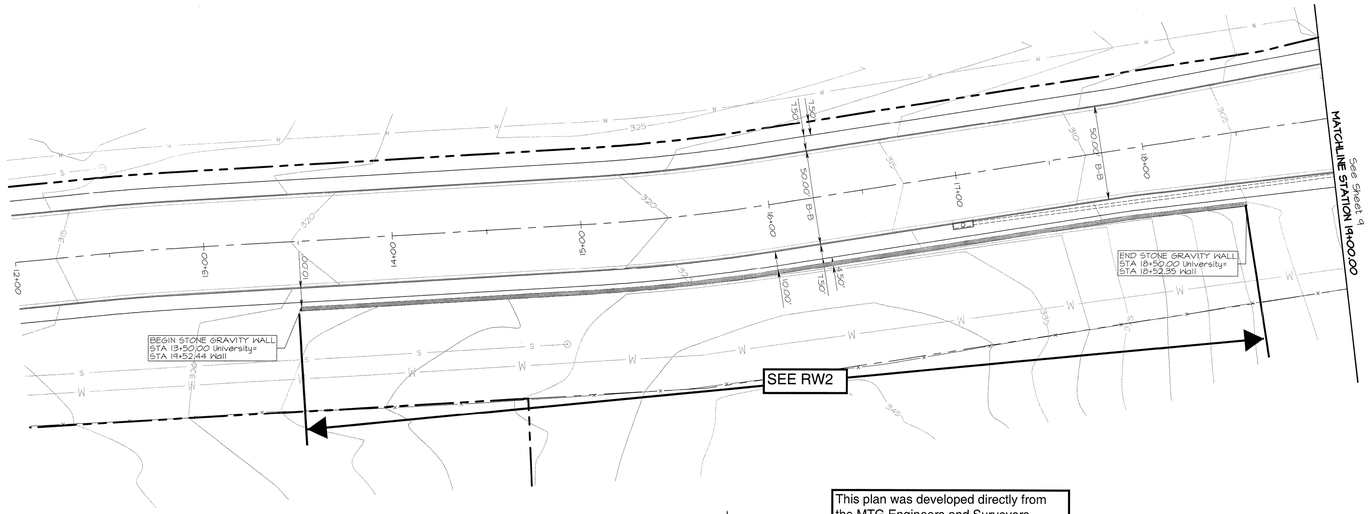

N

PLAN VIEW

Scale: 1" = 40'

This plan was developed directly from the MTG Engineers and Surveyors Retaining Wall Plan & Profile page, sheet 8, dated 9-14-12. This plan is for the sole purpose of showing what retaining wall sections to use where and to comment on the site as necessary with regards to the retaining walls.

NOTE: THESE PLANS ARE FOR PERMIT AND BIDDING PURPOSES ONLY AND NOT FOR CONSTRUCTION.

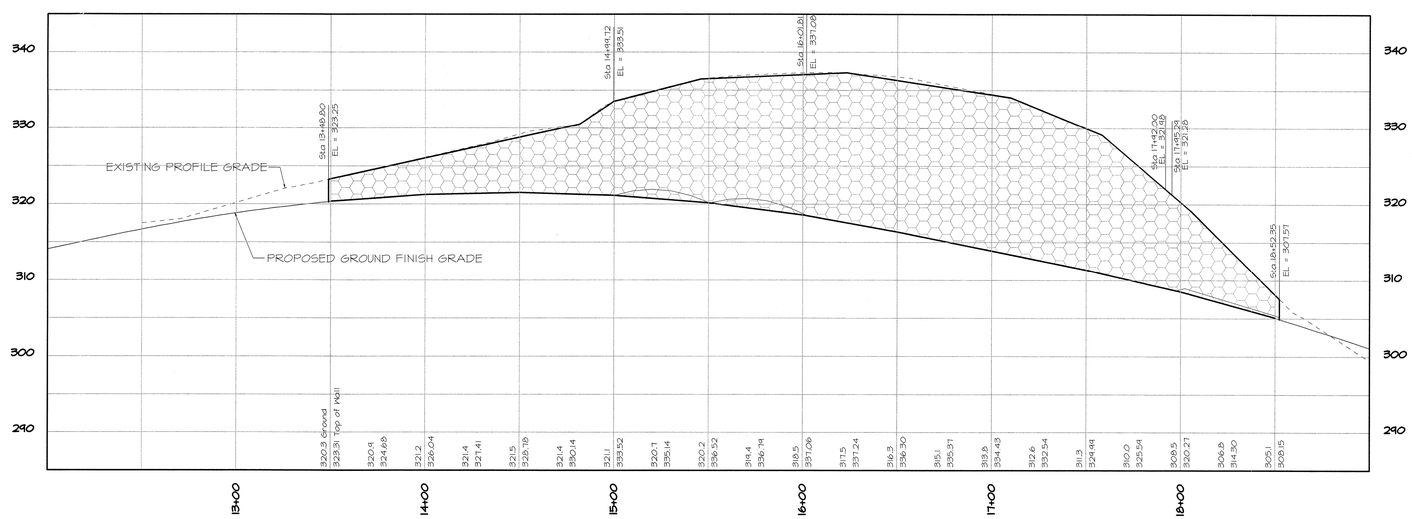

PROFILE VIEW

Horizontal Scale: 1" = 40'
Vertical Scale: 1" = 10'

NOTE:
RETAINING WALL SHALL BE A STONE GRAVITY WALL WITH A NATURAL STONE FACE. CONTRACTOR SHALL PROVIDE SIGNED AND SEALED DRAWINGS FROM A PROFESSIONAL ENGINEER ON STRUCTURAL DESIGN AND CULVERT CONNECTION DETAILS FOR APPROVAL

	DATE	BY
DES.	10-09-12	AMB
DRN.	10-09-12	AMB
CHK.	10-09-12	TJF

NO.	DATE	REVISION	BY

FALKOFSKE ENGINEERING, INC.
Structural Engineering Consultants
Texas Registered Engineering Firm: # F-4038
1414 West Randol Mill Road
Suite 201
Arlington, Texas 76012
Metro (817) 261-8300

The use of these plans and specifications shall be restricted to the original site for which they were prepared. Any publication of these plans is expressly limited to such use. Reproduction, publication or disclosure by any method, in whole or in part, is prohibited. These drawings and specifications are the property of FALKOFSKE ENGINEERING.

RETAINING WALL SITE PLAN
UNIVERSITY BOULEVARD, PHASE IV EXTENSION
TEXARKANA, TEXAS

MTG ENGINEERS AND SURVEYORS
5930 SUMMERHILL ROAD
TEXARKANA, TEXAS

STATE OF TEXAS
AARON M. BERKES
107154
LICENSED
PROFESSIONAL ENGINEER
10-9-12

JOB NO. 317.12

SP1

Attachment: Exhibit "B" Phase IV TAMU East Approach Street Construction Project Plans (1076 : Res. No. 2014-042 Phase IV TAMU East Approach Street Construction Project)

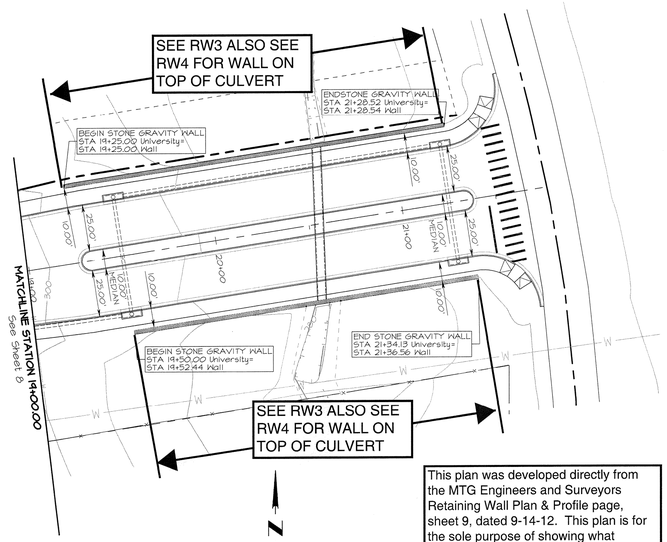

PLAN VIEW

Scale: 1" = 40'

This plan was developed directly from the MTG Engineers and Surveyors Retaining Wall Plan & Profile page, sheet 9, dated 9-14-12. This plan is for the sole purpose of showing what retaining wall sections to use where and to comment on the site as necessary with regards to the retaining walls.

NOTE: THESE PLANS ARE FOR PERMIT AND BIDDING PURPOSES ONLY AND NOT FOR CONSTRUCTION.

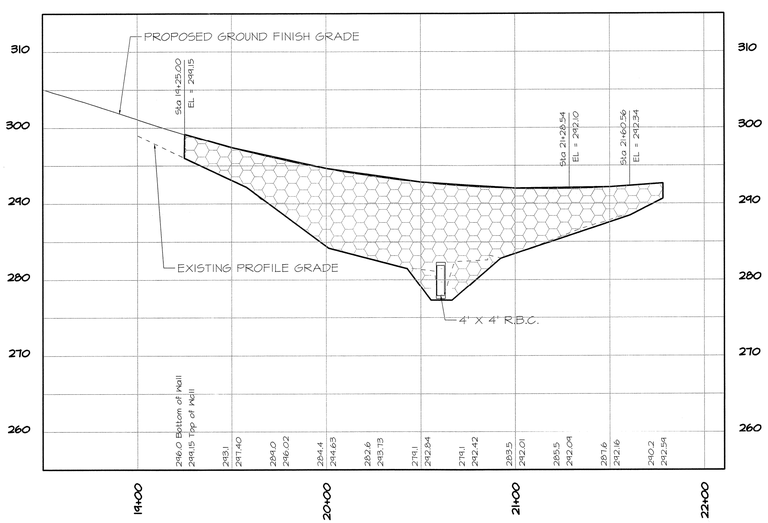

LEFT WALL PROFILE VIEW

Horizontal Scale: 1" = 40'
Vertical Scale: 1" = 10'

NOTE:
RETAINING WALL SHALL BE A STONE GRAVITY WALL WITH A NATURAL STONE FACE. CONTRACTOR SHALL PROVIDE SIGNED AND SEALED DRAWINGS FROM A PROFESSIONAL ENGINEER ON STRUCTURAL DESIGN AND CULVERT CONNECTION DETAILS FOR APPROVAL

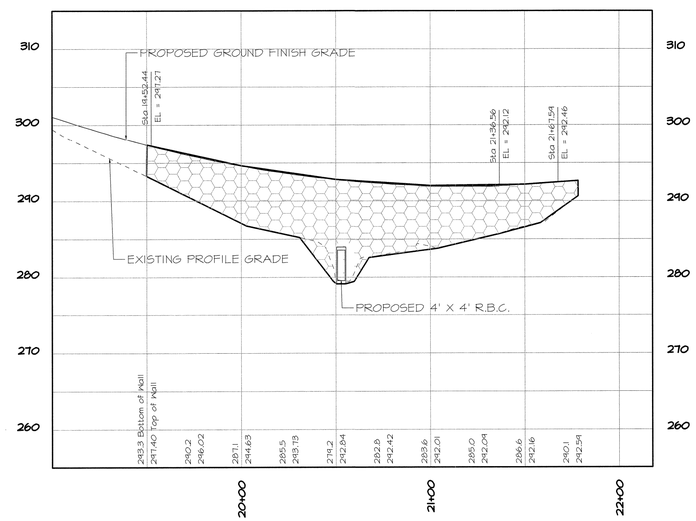

RIGHT WALL PROFILE VIEW

Horizontal Scale: 1" = 40'
Vertical Scale: 1" = 10'

NOTE:
RETAINING WALL SHALL BE A STONE GRAVITY WALL WITH A NATURAL STONE FACE. CONTRACTOR SHALL PROVIDE SIGNED AND SEALED DRAWINGS FROM A PROFESSIONAL ENGINEER ON STRUCTURAL DESIGN AND CULVERT CONNECTION DETAILS FOR APPROVAL

	DATE	BY
DES.	10-09-12	AMB
DRN.	10-09-12	AMB
CHK.	10-09-12	TJF

NO.	DATE	REVISION	BY

FALKOFSKE ENGINEERING, INC.
Structural Engineering Consultants
Texas Registered Engineering Firm: # F-4038
1414 West Randal Mill Road
Suite 201
Arlington, Texas 76012
Metro (817) 261-8300

The use of these plans and specifications shall be restricted to the purpose for which they were prepared. Any reproduction or distribution is expressly prohibited. Any other reproduction, reuse, or distribution, in whole or in part, is prohibited. These drawings and specifications contain proprietary information regarding the methods in FALKOFSKE ENGINEERING.

RETAINING WALL SITE PLAN
UNIVERSITY BOULEVARD, PHASE IV EXTENSION
TEXARKANA, TEXAS

MTG ENGINEERS AND SURVEYORS
5930 SUMMERHILL ROAD
TEXARKANA, TEXAS

STATE OF TEXAS
AARON M. BERKES
107154
LICENSED
PROFESSIONAL ENGINEER
6-7-12

JOB NO. 317.12

SP2

Attachment: Exhibit "B" Phase IV TAMU East Approach Street Construction Project Plans (1076 : Res. No. 2014-042 Phase IV TAMU East Approach Street Construction Project)

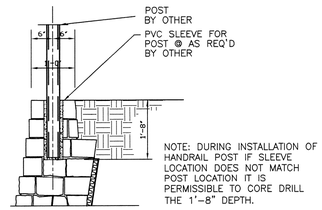

1 RW1 WALL SECTION W/HANDRAIL POST
CONTRACTOR OPTION N.T.S.

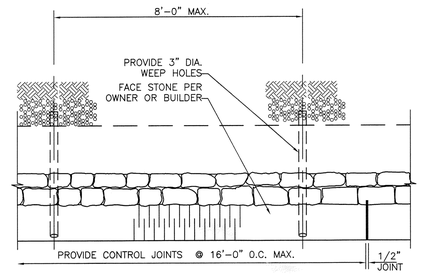

2 RW1 TYPICAL PLAN VIEW AT BASE N.T.S.

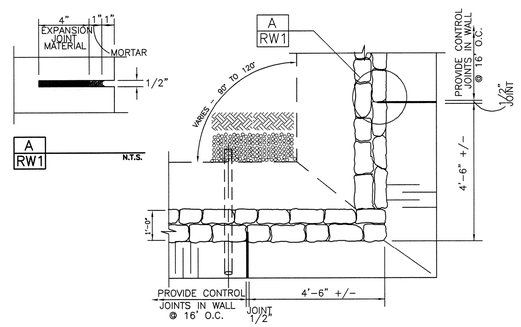

3 RW1 TYPICAL PLAN VIEW AT CORNERS N.T.S.

1. Design Building Code

International Building Code, 2009 Edition

2. Geotechnical Report

Firm: ETTL ENIGNEERS & CONSULTANTS, INC.
Report No. G3811-12 Dated: September 27, 2012
Allowable Bearing Capacity 1500psf, 2500psf

Note:
All of the above noted bearing capacities are anticipated throughout the site. Each wall section has a design for multiple bearing capacity options. It will be field verified which bearing condition to use based on the conditions of the soil at the base of the wall during excavation. If the bearing capacity changes along the length of the retaining wall it is permitted to change bearing capacity designs as needed.

3. Geotechnical Criteria

Bearing on Stiff Natural Undisturbed Clayey Soils or Compacted and Tested Soils

Allowable Bearing = 1500 psf, min.
Friction Angle between Base of Wall and Soil - 17 deg

Backfill Soil Parameters:
Backfill Soil - Natural Clays or Fill Soils
Backfill Angle of Internal Friction PHI = 28 deg

Base Soil Parameters:
Soil at Toe - Natural, Undisturbed or Fill Soils
Angle of Internal Friction PHI = 28 deg

Bearing on Hard Natural Undisturbed Clayey Soils

Allowable Bearing = 2500 psf, min.
Friction Angle Between Base of Wall and Soil - 19 deg

Backfill Soil Parameters:
Backfill Soil - Natural Clays or Fill Soils
Backfill Angle of Internal Friction PHI = 28 deg

Base Soil Parameters:
Soil at Toe - Natural, Undisturbed Soils
Angle of Internal Friction PHI = 28 deg

Bearing on Remediated Base

Allowable Bearing = 2500 psf, min.
Friction Angle Between Base of Wall and Soil - 28 deg

Backfill Soil Parameters:
Backfill Soil - Natural Clays or Fill Soils
Backfill Angle of Internal Friction PHI = 28 deg

Base Soil Parameters:
Soil at Toe - Natural, Undisturbed Soils
Angle of Internal Friction PHI = 28 deg

Backfill soils may be onsite clayey soils and shall be compacted to a minimum of between 90 to 95 percent of maximum dry density, as determined by ASTM D698, "Standard Proctor" at minimum + 3 percentage points of optimum. However, in cases where the backfill soils will be used for support of buildings, roadways, or other structures the requirements of the geotechnical report control compaction requirements.

The use of heavy equipment within 3'-0" of the wall could damage the wall and should be avoided.

Locate base of walls on undisturbed or properly compacted soil.

4. Materials:

Average density of masonry stone wall varies from 135 pcf to 145 pcf.

Portland Cement Mortar for Retaining Wall Construction.

The portland cement mortar used for construction of the masonry stone retaining walls shall be provided with the following proportions per cubic yard of concrete. The portland cement mortar supplier shall provide "batch tickets" clearly indicating that the appropriate amount of materials are provided in each concrete mixer truck load. The batch tickets shall clearly indicate the amount batched, the date, the project name and shall be provided to Falkofske Engineering, Inc. for review, documentation, and file.

Contents	Amount per cubic yard
Type 1 Portland cement:	376 lbs
Type F Fly Ash	94 lbs
Fine Aggregate (sand):	3250 lbs
Potable Water	235 lbs
Admixture Eucon 100	48 oz average

Concrete retarders such as "Eucon 100 Retarder" may be used at the discretion of the masonry wall contractor. A greater amount of retarder (about 64 ounces) is typically used during hot periods and a less amount of retarder (about 32 ounces) is typically used during cool weather.

Please note that the above proportions will provide a portland cement mortar with a compressive strength of about f'c = 2500 psi. Falkofske Engineering, Inc. does not require any concrete testing provided the above proportions are verified by way of the "batch tickets".

5. Construction Reviews

Falkofske Engineering, Inc. shall be called for construction review of masonry wall.

6. Retaining Wall Design Constraints

Retaining walls should not have solid fence placed on top of wall other than that shown on these plans. Retaining walls shall not have additional surcharge placed above wall ohter than that shown on these plans. Retaining walls shall not have slope at base or top of wall that exceed that which is shown on these plans. The retaining walls noted above require special design.

Minor variations in the construction of the retaining walls from these documents may be accepted at the discretion of the design engineer.

NOTE: THE DRAWINGS ARE FOR PERMITTING AND BIDDING PURPOSES, AND NOT FOR CONSTRUCTION.

NO.	DATE	REVISION	BY

	DATE	BY
DES.	10-09-12	AMB
DRN.	10-09-12	AMB
CHK.	10-09-12	TJF

FALKOFSKE ENGINEERING, INC.
Structural Engineering Consultants
Texas Registered Engineering Firm: # F-4038
1414 West Randol Mill Road
Suite 201
Arlington, Texas 76012
Metro (817) 261-8300

The use of these plans and specifications shall be restricted to the original site for which they were prepared. Any other reproduction, reuse, or publication by any method is expressly limited to such use. Any other reproduction, reuse, or publication, in whole, or in part, is prohibited. These plans and specifications contain proprietary information and shall remain the property of FALKOFSKE ENGINEERING.

MASONRY RETAINING WALLS
NOTES & STANDARD DETAILS
UNIVERSITY BOULEVARD, PHASE IV EXTENSION
TEXARKANA, TEXAS

MTG ENGINEERS AND SURVEYORS
5930 SUMMERHILL ROAD
TEXARKANA, TEXAS

STATE OF TEXAS
AARON M. BERKES
102154
LICENSED
PROFESSIONAL ENGINEER
10-9-12

JOB NO. 317.12

RW1

Attachment: Exhibit "B" Phase IV TAMU East Approach Street Construction Project Plans (1076 : Res. No. 2014-042 Phase IV TAMU East Approach Street Construction Project)

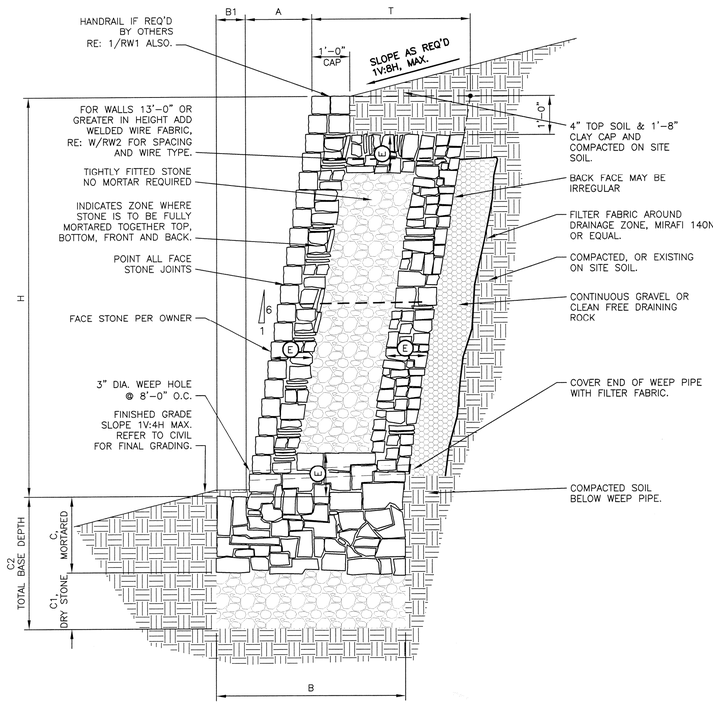

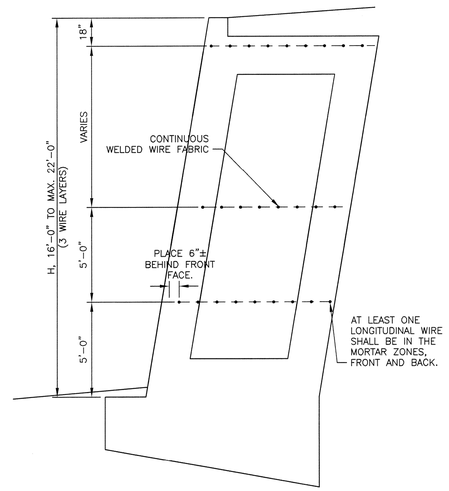

WALLS 16'-0" TO 22'-0" TALL

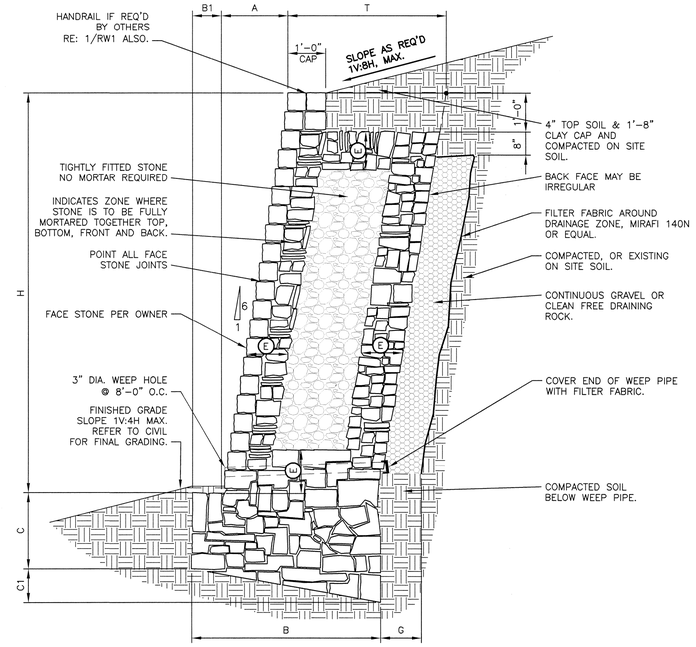

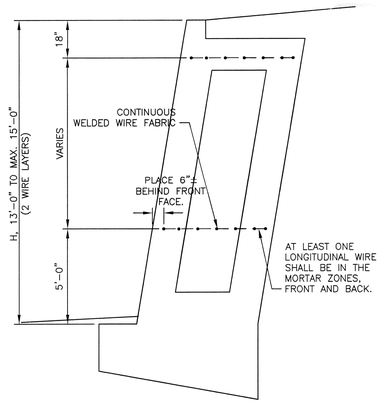

WALLS 13'-0" TO 15'-0" TALL

MASONRY WALL SCHEDULE
2500 psf – BEARING CAPACITY (EXTENDED STONE BASE – SEE GENERAL NOTES SHEET RW1)

WALL HEIGHT H	BASE WIDTH B	TOE B1	BASE (MORTARED) C	BASE (NO MORTAR) C1	BASE DEPTH (TOTAL) C2	BATTER A	FULLY MORTARED ZONE E	THICKNESS OF WALL T	DRAINAGE ZONE THICKNESS G	BEARING CAPACITY
12'-0"	6'-8"	1'-1"	2'-9"	1'-3"	4'-0"	2'-0"	1'-4"	5'-7"	1'-9"	
13'-0"	7'-4"	1'-3"	2'-9"	1'-9"	4'-6"	2'-2"	1'-4"	6'-1"	1'-9"	
14'-0"	8'-0"	1'-6"	3'-0"	2'-3"	5'-3"	2'-4"	1'-6"	6'-6"	2'-0"	
15'-0"	8'-8"	1'-8"	3'-0"	3'-0"	6'-0"	2'-6"	1'-6"	7'-0"	2'-0"	
16'-0'	9'-4"	1'-10"	3'-0"	3'-9"	6'-9"	2'-8"	1'-8"	7'-6"	2'-3"	2500 psf
17'-0"	9'-11"	2'-0"	3'-3"	4'-3"	7'-6"	2'-10"	1'-8"	7'-11"	2'-3"	
18'-0"	10'-7"	2'-3"	3'-6"	4'-9"	8'-3"	3'-0"	2'-0"	8'-4"	2'-6"	
19'-0"	11'-3"	2'-6"	3'-9"	5'-3"	9'-0"	3'-2"	2'-0"	8'-9"	2'-6"	2600 psf
20'-0"	11'-10"	2'-8"	4'-0"	6'-0"	10'-0"	3'-4"	2'-2"	9'-2"	2'-9"	2800 psf
21'-0"	12'-5"	2'-9"	4'-0"	7'-0"	11'-0"	3'-6"	2'-2"	9'-8"	2'-9"	2900 psf

WALL DESIGN CRITERIA

BEARING Qa	SLOPE TOP β	SLOPE BOT β1	ACTIVE PRESSURE Φa	PASSIVE PRESSURE Φp	FRICTION ANGLE BASE δ	SLOPE OF BACK OF WALL α	SURCHARGE q
2500PSF	7.13 deg	14 deg	28 deg	28 deg	28 deg	99.46 deg	0 psf

USE THIS SCHEDULE FOR 2/RW2

MASONRY WALL SCHEDULE
1500 psf – BEARING CAPACITY (STIFF NATURAL UNDISTURBED SOILS OR COMPACTED AND TESTED SOILS SEE GENERAL NOTES SHEET RW1)

WALL HEIGHT H	BASE WIDTH B	TOE B1	BASE DEPTH (TOE) C	BASE DEPTH (HEEL) C1	BATTER A	FULLY MORTARED ZONE E	THICKNESS OF WALL T	DRAINAGE ZONE THICKNESS G	BEARING CAPACITY
1'-0"	1'-0"	0'-0"	0'-6"	0'-2"	0'-2"	FULLY MORTARED	1'-0"	0'-9"	
2'-0"	1'-0"	0'-0"	0'-6"	0'-2"	0'-4"	FULLY MORTARED	1'-0"	0'-9"	
3'-0"	1'-5"	0'-2"	0'-9"	0'-3"	0'-6"	FULLY MORTARED	1'-3"	0'-9"	
4'-0"	2'-0"	0'-3"	0'-9"	0'-5"	0'-8"	FULLY MORTARED	1'-9"	0'-9"	
5'-0"	2'-8"	0'-4"	1'-0"	0'-6"	0'-10"	0'-8"	2'-4"	0'-9"	1500 psf
6'-0"	3'-1"	0'-5"	1'-3"	0'-7"	1'-0"	0'-10"	2'-8"	0'-9"	
7'-0"	3'-8"	0'-6"	1'-3"	0'-8"	1'-2"	0'-10"	3'-2"	1'-0"	
8'-0"	4'-6"	0'-8"	1'-6"	0'-10"	1'-4"	1'-0"	3'-10"	1'-0"	1600 psf
9'-0"	5'-2"	0'-9"	2'-0"	0'-11"	1'-6"	1'-0"	4'-5"	1'-3"	1800 psf
10'-0"	5'-10"	0'-11"	2'-3"	1'-1"	1'-8"	1'-2"	4'-11"	1'-3"	2100 psf
11'-0"	6'-5"	1'-1"	2'-6"	1'-2"	1'-10"	1'-2"	5'-4"	1'-6"	2400 psf

WALL DESIGN CRITERIA

BEARING Qa	SLOPE TOP β	SLOPE BOT β1	ACTIVE PRESSURE Φa	PASSIVE PRESSURE Φp	FRICTION ANGLE BASE δ	SLOPE OF BACK OF WALL α	SURCHARGE q
1500PSF	7.13 deg	14 deg	28 deg	28 deg	17 deg	99.46 deg	0 psf

USE THIS SCHEDULE FOR 1/RW2

MASONRY WALL SCHEDULE
2500 psf – BEARING CAPACITY (HARD NATURAL UNDISTURBED SOILS SEE GENERAL NOTES SHEET RW1)

WALL HEIGHT H	BASE WIDTH B	TOE B1	BASE DEPTH (TOE) C	BASE DEPTH (HEEL) C1	BATTER A	FULLY MORTARED ZONE E	THICKNESS OF WALL T	DRAINAGE ZONE THICKNESS G	BEARING CAPACITY
1'-0"	1'-0"	0'-0"	0'-6"	0'-2"	0'-2"	FULLY MORTARED	1'-0"	0'-9"	
2'-0"	1'-0"	0'-0"	0'-6"	0'-2"	0'-4"	FULLY MORTARED	1'-0"	0'-9"	
3'-0"	1'-4"	0'-2"	0'-9"	0'-3"	0'-6"	FULLY MORTARED	1'-2"	0'-9"	
4'-0"	1'-9"	0'-3"	0'-9"	0'-4"	0'-8"	FULLY MORTARED	1'-6"	0'-9"	
5'-0"	2'-4"	0'-3"	1'-0"	0'-5"	0'-10"	0'-8"	2'-1"	0'-9"	
6'-0"	2'-10"	0'-4"	1'-3"	0'-6"	1'-0"	0'-10"	2'-6"	0'-9"	2500 psf
7'-0"	3'-4"	0'-5"	1'-3"	0'-8"	1'-2"	0'-10"	2'-11"	1'-0"	
8'-0"	3'-10"	0'-6"	1'-6"	0'-9"	1'-4"	1'-0"	3'-4"	1'-0"	
9'-0"	4'-8"	0'-7"	2'-0"	0'-10"	1'-6"	1'-0"	4'-1"	1'-3"	
10'-0"	5'-4"	0'-8"	2'-3"	1'-0"	1'-8"	1'-2"	4'-8"	1'-3"	
11'-0"	5'-9"	0'-9"	2'-6"	1'-1"	1'-10"	1'-2"	5'-0"	1'-6"	
12'-0"	6'-5"	1'-1"	2'-9"	1'-2"	2'-0"	1'-4"	5'-4"	1'-6"	

WALL DESIGN CRITERIA

BEARING Qa	SLOPE TOP β	SLOPE BOT β1	ACTIVE PRESSURE Φa	PASSIVE PRESSURE Φp	FRICTION ANGLE BASE δ	SLOPE OF BACK OF WALL α	SURCHARGE q
2500PSF	7.13 deg	14 deg	28 deg	28 deg	19 deg	99.46 deg	0 psf

USE THIS SCHEDULE FOR 1/RW2

LEGEND

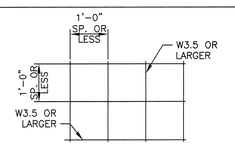

NOTES:

1. USE WELDED WIRE FABRIC W3.5xW3.5x12x12
2. W3.5 HAS A DIAMETER = 0.211", SIZE MAY BE LARGER.
3. WIRE SPACING MAY BE 1'-0" OR LESS
4. WIRE SHALL BE GALVANIZED.
5. WIRE SHALL BE CONTINUOUS IN WALLS 10'-0" AND GREATER.

2 / RW2 — TYPICAL WALL SECTION – 1V:8H MAX SLOPE ABOVE WALL WITH GLOBAL STABILITY BASE BEARING IN CLAYEY OR SANDY SOILS — 1/2" = 1'-0"

W / RW2 — WIRE SPACING FOR WALLS 13'-0" AND GREATER — 1/4" = 1'-0"

1 / RW2 — TYPICAL WALL SECTION BEARING IN CLAYEY OR SANDY SOILS MAX SLOPE ABOVE WALL 1V:8H — 1/2" = 1'-0"

NOTE: THE DRAWINGS ARE FOR PERMITTING AND BIDDING PURPOSES, AND NOT FOR CONSTRUCTION.

NO.	DATE	REVISION	BY

	DATE	BY
DES.	10-09-12	AMB
DRN.	10-09-12	AMB
CHK.	10-09-12	TJF

FALKOFSKE ENGINEERING, INC.
Structural Engineering Consultants
Texas Registered Engineering Firm: # F-4038
1414 West Randol Mill Road
Suite 201
Arlington, Texas 76012
Metro (817) 261-8300

The use of these plans and specifications shall be restricted to the original site for which they were prepared. Any reproduction, or distribution is forbidden without written consent. Any other reproduction, reuse, or distribution in whole, or in part, is prohibited. These drawings and specifications contain proprietary information regarding the ownership of FALKOFSKE ENGINEERING.

MASONRY RETAINING WALLS
UNIVERSITY BOULEVARD, PHASE IV EXTENSION
TEXARKANA, TEXAS

MTG ENGINEERS AND SURVEYORS
5930 SUMMERHILL ROAD
TEXARKANA, TEXAS

STATE OF TEXAS
AARON M. BERKES
107154
LICENSED PROFESSIONAL ENGINEER
10-9-12

JOB NO. 317.12

RW2

Attachment: Exhibit "B" Phase IV TAMU East Approach Street Construction Project Plans (1076 : Res. No. 2014-042 Phase IV TAMU East Approach Street Construction Project)

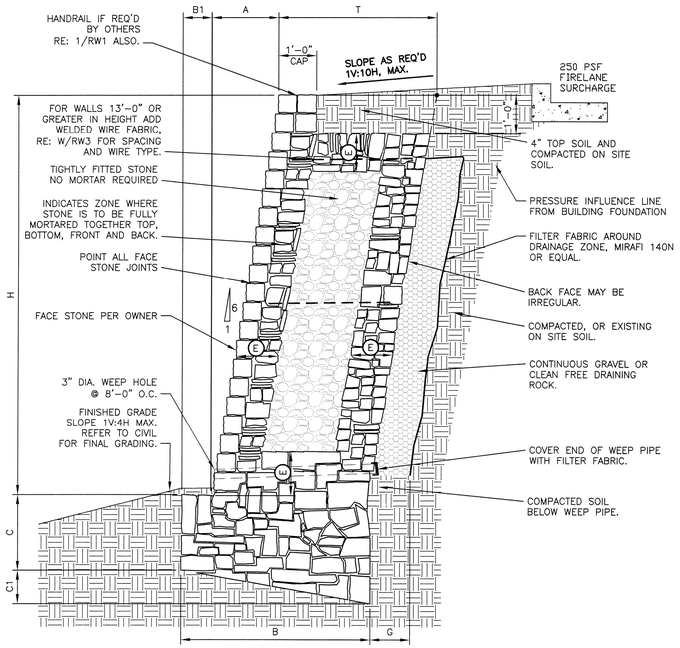

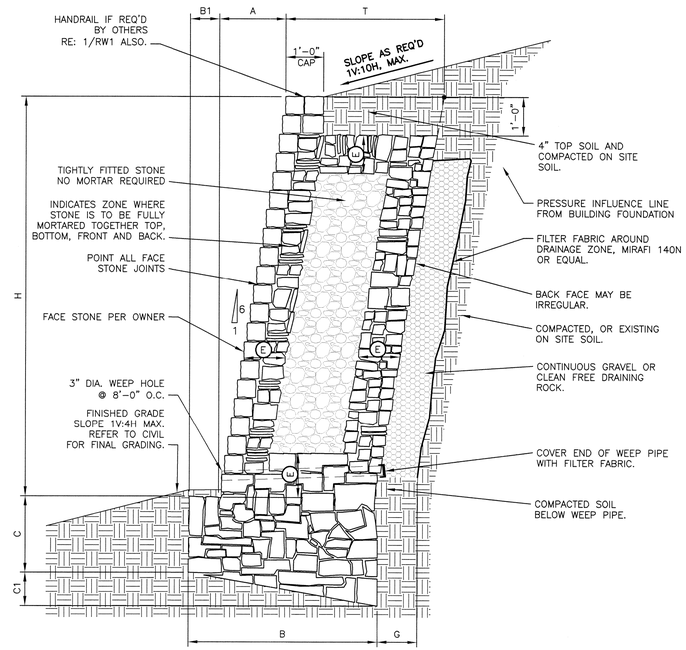

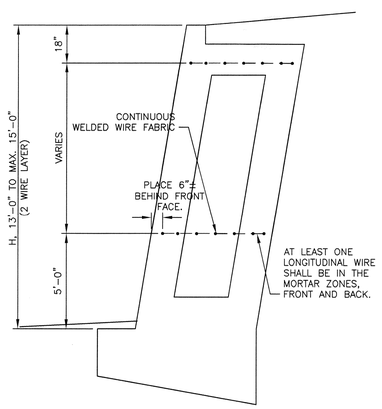

WALLS 13'-0" TO 15'-0" TALL

MASONRY WALL SCHEDULE
1500 psf – BEARING CAPACITY (STIFF NATURAL UNDISTURBED SOILS OR COMPACTED AND TESTED SOILS SEE GENERAL NOTES SHEET RW1)

WALL HEIGHT H	BASE WIDTH B	TOE B1	BASE DEPTH (TOE) C	BASE DEPTH (HEEL) C1	BATTER A	FULLY MORTARED ZONE E	THICKNESS OF WALL T	DRAINAGE ZONE THICKNESS G	BEARING CAPACITY
8'-0"	5'-7"	1'-4"	2'-3"	1'-0"	1'-4"	1'-0"	4'-3"	1'-0"	1500 psf
9'-0"	6'-2"	1'-8"	2'-6"	1'-1"	1'-6"	1'-0"	4'-6"	1'-3"	1600 psf
10'-0"	6'-10"	2'-0"	2'-9"	1'-3"	1'-8"	1'-2"	4'-10"	1'-3"	1700 psf
11'-0"	7'-4"	2'-3"	3'-0"	1'-4"	1'-10"	1'-2"	5'-1"	1'-6"	1800 psf
12'-0"	8'-0"	2'-8"	3'-6"	1'-5"	2'-0"	1'-4"	5'-4"	1'-6"	2000 psf
13'-0"	8'-6"	3'-0"	4'-0"	1'-6"	2'-2"	1'-4"	5'-6"	1'-9"	2300 psf

WALL DESIGN CRITERIA

BEARING Qa	SLOPE TOP β	SLOPE BOT β1	ACTIVE PRESSURE Φa	PASSIVE PRESSURE Φp	FRICTION ANGLE BASE δ	SLOPE OF BACK OF WALL α	SURCHARGE q
1500PSF	0 deg	14 deg	28 deg	28 deg	17 deg	99.46 deg	250 psf

USE THIS SCHEDULE FOR 2/RW3

MASONRY WALL SCHEDULE
2500 psf – BEARING CAPACITY (HARD NATURAL UNDISTURBED SOILS SEE GENERAL NOTES SHEET RW1)

WALL HEIGHT H	BASE WIDTH B	TOE B1	BASE DEPTH (TOE) C	BASE DEPTH (HEEL) C1	BATTER A	FULLY MORTARED ZONE E	THICKNESS OF WALL T	DRAINAGE ZONE THICKNESS G	BEARING CAPACITY
8'-0"	5'-0"	1'-3"	2'-3"	0'-11"	1'-4"	1'-0"	3'-9"	1'-0"	2500 psf
9'-0"	5'-7"	1'-6"	2'-6"	1'-1"	1'-6"	1'-0"	4'-1"	1'-3"	
10'-0"	6'-1"	1'-9"	2'-9"	1'-1"	1'-8"	1'-2"	4'-4"	1'-3"	
11'-0"	6'-7"	2'-0"	3'-0"	1'-2"	1'-10"	1'-2"	4'-7"	1'-6"	
12'-0"	7'-3"	2'-3"	3'-6"	1'-4"	2'-0"	1'-4"	5'-0"	1'-6"	
13'-0"	7'-9"	2'-6"	4'-0"	1'-5"	2'-2"	1'-4"	5'-3"	1'-9"	
14'-0"	8'-5"	2'-9"	4'-6"	1'-6"	2'-4"	1'-6"	5'-8"	1'-9"	
15'-0"	9'-0"	3'-0"	5'-0"	1'-8"	2'-6"	1'-6"	6'-0"	2'-0"	

WALL DESIGN CRITERIA

BEARING Qa	SLOPE TOP β	SLOPE BOT β1	ACTIVE PRESSURE Φa	PASSIVE PRESSURE Φp	FRICTION ANGLE BASE δ	SLOPE OF BACK OF WALL α	SURCHARGE q
2500PSF	0 deg	14 deg	28 deg	28 deg	19 deg	99.46 deg	250 psf

USE THIS SCHEDULE FOR 2/RW3

LEGEND

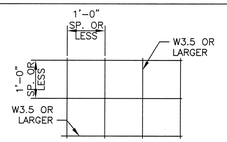

NOTES:

1. USE WELDED WIRE FABRIC W3.5xW3.5x12x12
2. W3.5 HAS A DIAMETER = 0.211", SIZE MAY BE LARGER.
3. WIRE SPACING MAY BE 1'-0" OR LESS
4. WIRE SHALL BE GALVANIZED.
5. WIRE SHALL BE CONTINUOUS IN WALLS 10'-0" AND GREATER.

MASONRY WALL SCHEDULE
1500 psf – BEARING CAPACITY (STIFF NATURAL UNDISTURBED SOILS OR COMPACTED AND TESTED SOILS SEE GENERAL NOTES SHEET RW1)

WALL HEIGHT H	BASE WIDTH B	TOE B1	BASE DEPTH (TOE) C	BASE DEPTH (HEEL) C1	BATTER A	FULLY MORTARED ZONE E	THICKNESS OF WALL T	DRAINAGE ZONE THICKNESS G	BEARING CAPACITY
1'-0"	1'-0"	0'-0"	1'-0"	0'-2"	0'-2"	FULLY MORTARED	1'-0"	0'-9"	1500 psf
2'-0"	1'-0"	0'-0"	1'-0"	0'-3"	0'-4"	FULLY MORTARED	1'-0"	0'-9"	
3'-0"	1'-6"	0'-2"	1'-0"	0'-4"	0'-6"	FULLY MORTARED	1'-4"	0'-9"	
4'-0"	2'-1"	0'-4"	1'-3"	0'-5"	0'-8"	FULLY MORTARED	1'-9"	0'-9"	
5'-0"	2'-10"	0'-5"	1'-6"	0'-6"	0'-10"	0'-8"	2'-5"	0'-9"	
6'-0"	3'-3"	0'-6"	1'-9'	0'-7"	1'-0"	0'-10"	2'-9"	0'-9"	
7'-0"	4'-0"	0'-8"	2'-0"	0'-9"	1'-2"	0'-10"	3'-4"	1'-0"	
8'-0"	4'-8"	0'-10"	2'-3"	0'-10"	1'-4"	1'-0"	3'-10"	1'-0"	

WALL DESIGN CRITERIA

BEARING Qa	SLOPE TOP β	SLOPE BOT β1	ACTIVE PRESSURE Φa	PASSIVE PRESSURE Φp	FRICTION ANGLE BASE δ	SLOPE OF BACK OF WALL α	SURCHARGE q
1500PSF	5.71 deg	14 deg	28 deg	28 deg	17 deg	99.46 deg	0 psf

USE THIS SCHEDULE FOR 1/RW3

MASONRY WALL SCHEDULE
2500 psf – BEARING CAPACITY (HARD NATURAL UNDISTURBED SOILS SEE GENERAL NOTES SHEET RW1)

WALL HEIGHT H	BASE WIDTH B	TOE B1	BASE DEPTH (TOE) C	BASE DEPTH (HEEL) C1	BATTER A	FULLY MORTARED ZONE E	THICKNESS OF WALL T	DRAINAGE ZONE THICKNESS G	BEARING CAPACITY
1'-0"	1'-0"	0'-0"	1'-0"	0'-2"	0'-2"	FULLY MORTARED	1'-0"	0'-9"	2500 psf
2'-0"	1'-0"	0'-0"	1'-0"	0'-2"	0'-4"	FULLY MORTARED	1'-0"	0'-9"	
3'-0"	1'-5"	0'-2"	1'-0"	0'-3"	0'-6"	FULLY MORTARED	1'-3"	0'-9"	
4'-0"	2'-0"	0'-4"	1'-3"	0'-5"	0'-8"	FULLY MORTARED	1'-8"	0'-9"	
5'-0"	2'-8"	0'-5"	1'-6"	0'-6"	0'-10"	0'-8"	2'-3"	0'-9"	
6'-0"	3'-1"	0'-6"	1'-9'	0'-7"	1'-0"	0'-10"	2'-7"	0'-9"	
7'-0"	3'-9"	0'-7"	2'-0"	0'-8"	1'-2"	0'-10"	3'-2"	1'-0"	
8'-0"	4'-3"	0'-8"	2'-3"	0'-9"	1'-4"	1'-0"	3'-7"	1'-0"	

WALL DESIGN CRITERIA

BEARING Qa	SLOPE TOP β	SLOPE BOT β1	ACTIVE PRESSURE Φa	PASSIVE PRESSURE Φp	FRICTION ANGLE BASE δ	SLOPE OF BACK OF WALL α	SURCHARGE q
2500PSF	5.71 deg	14 deg	28 deg	28 deg	19 deg	99.46 deg	0 psf

USE THIS SCHEDULE FOR 1/RW3

2 / RW3 — TYPICAL WALL SECTION
BEARING IN CLAYEY OR SANDY SOILS
FIRELANE SURCHARGE
1/2" = 1'-0"

W / RW3 — WIRE SPACING FOR WALLS
13'-0" AND GREATER
1/4" = 1'-0"

1 / RW3 — TYPICAL WALL SECTION
BEARING IN CLAYEY OR SANDY SOILS
MAX SLOPE ABOVE WALL 1V:10H
1/2" = 1'-0"

NO.	DATE	REVISION	BY

	DATE	BY
DES.	10-09-12	AMB
DRN.	10-09-12	AMB
CHK.	10-09-12	TJF

FALKOFSKE ENGINEERING, INC.
Structural Engineering Consultants
Texas Registered Engineering Firm: # F-4038
1414 West Randol Mill Road
Suite 201
Arlington, Texas 76012
Metro (817) 261-8300

The use of these plans and specifications shall be restricted to the original site for which they were prepared. Any reproduction or distribution is expressly prohibited. Any other reproduction, reuse, or distribution in the whole or in part, is prohibited. Furthermore, these plans and specifications contain proprietary information regarding the methods and systems used in FALKOFSKE ENGINEERING.

MASONRY RETAINING WALLS
UNIVERSITY BOULEVARD, PHASE IV EXTENSION
TEXARKANA, TEXAS

MTG ENGINEERS AND SURVEYORS
5930 SUMMERHILL ROAD
TEXARKANA, TEXAS

STATE OF TEXAS
AARON M. BERKES
107154
LICENSED PROFESSIONAL ENGINEER
10-9-12

JOB NO. 317.12

RW3

Attachment: Exhibit "B" Phase IV TAMU East Approach Street Construction Project Plans (1076 : Res. No. 2014-042 Phase IV TAMU East Approach Street Construction Project)

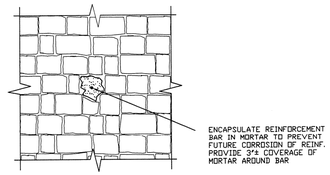

2 / RW4 — REBAR COVER — 3/4" = 1'-0"

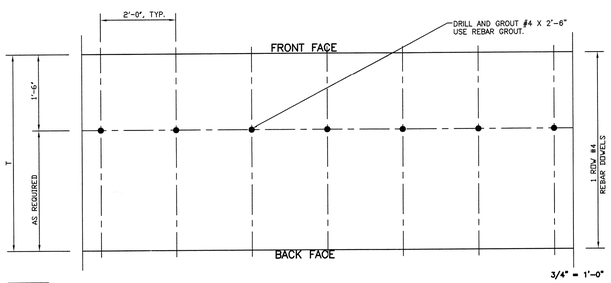

3 / RW4 — DOWELS LOCATION – FOR 8'-0" < H < 12'-0"

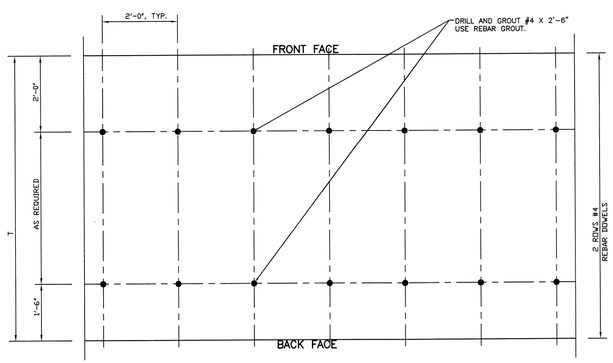

4 / RW4 — DOWELS LOCATION – FOR 12'-0" < H < 15'-0"

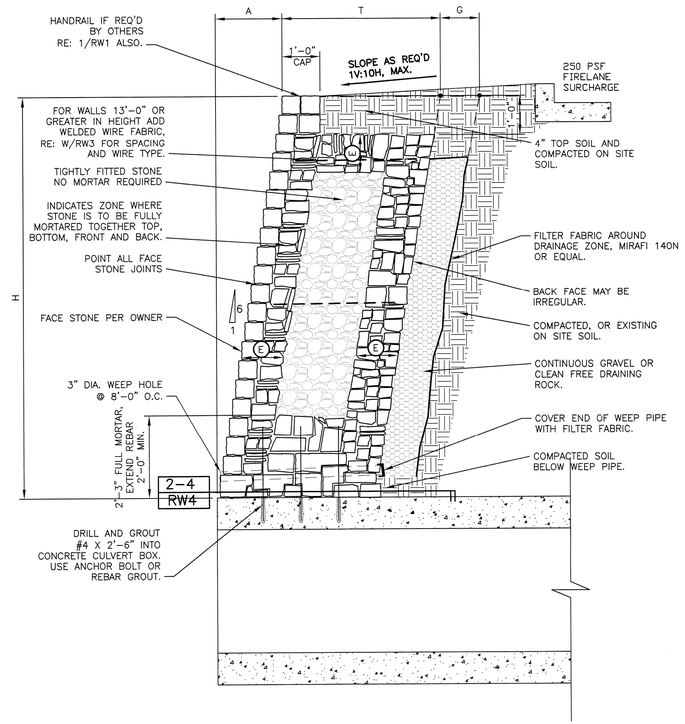

MASONRY WALL SCHEDULE
BEARING ON TOP OF CONCRETE BOX CULVERT

WALL HEIGHT H	BATTER A	FULLY MORTARED ZONE E	THICKNESS OF WALL T	DRAINAGE ZONE THICKNESS G		BEARING CAPACITY
8'-0"	1'-4"	1'-0"	3'-9"	1'-0"		2500 psf
9'-0"	1'-6"	1'-0"	4'-1"	1'-3"		
10'-0"	1'-8"	1'-2"	4'-4"	1'-3"		
11'-0"	1'-10"	1'-2"	4'-7"	1'-6"		
12'-0"	2'-0"	1'-4"	5'-0"	1'-6"		
13'-0"	2'-2"	1'-4"	5'-3"	1'-9"		
14'-0"	2'-4"	1'-6"	5'-8"	1'-9"		
15'-0"	2'-6"	1'-6"	6'-0"	2'-0"		

WALL DESIGN CRITERIA

BEARING Qa	SLOPE TOP β	SLOPE BOT β1	ACTIVE PRESSURE Φa	PASSIVE PRESSURE Φp	FRICTION ANGLE BASE δ	SLOPE OF BACK OF WALL α	SURCHARGE q
2500PSF	0 deg	14 deg	28 deg	N/A	19 deg	99.46 deg	250 psf

USE THIS SCHEDULE FOR 1/RW4

1 / RW4 — RETAINING WALL OVER THE TOP OF CONCRETE BOX CULVERT

NOTE: THE DRAWINGS ARE FOR PERMITTING AND BIDDING PURPOSES, AND NOT FOR CONSTRUCTION.

NO.	DATE	REVISION	BY

	DATE	BY
DES.	10-09-12	AMB
DRN.	10-09-12	AMB
CHK.	10-09-12	TJF

FALKOFSKE ENGINEERING, INC.
Structural Engineering Consultants
Texas Registered Engineering Firm: # F-4038
1414 West Randol Mill Road
Suite 201
Arlington, Texas 76012
Metro (817) 261-8300

The sets of these plans and specifications shall be restricted to the original site for which they were prepared. Any reproduction or distribution is forbidden without written consent. Any other reproduction, reuse, or distribution, in whole or in part, is prohibited. These drawings and specifications contain proprietary information and are the property of FALKOFSKE ENGINEERING.

MASONRY RETAINING WALLS
UNIVERSITY BOULEVARD, PHASE IV EXTENSION
TEXARKANA, TEXAS

MTG ENGINEERS AND SURVEYORS
5930 SUMMERHILL ROAD
TEXARKANA, TEXAS

STATE OF TEXAS
AARON M. BERKES
107159
LICENSED
PROFESSIONAL ENGINEER
10-9-12

JOB NO. 317.12

RW4

Attachment: Exhibit "B" Phase IV TAMU East Approach Street Construction Project Plans (1076 : Res. No. 2014-042 Phase IV TAMU East Approach Street Construction Project)

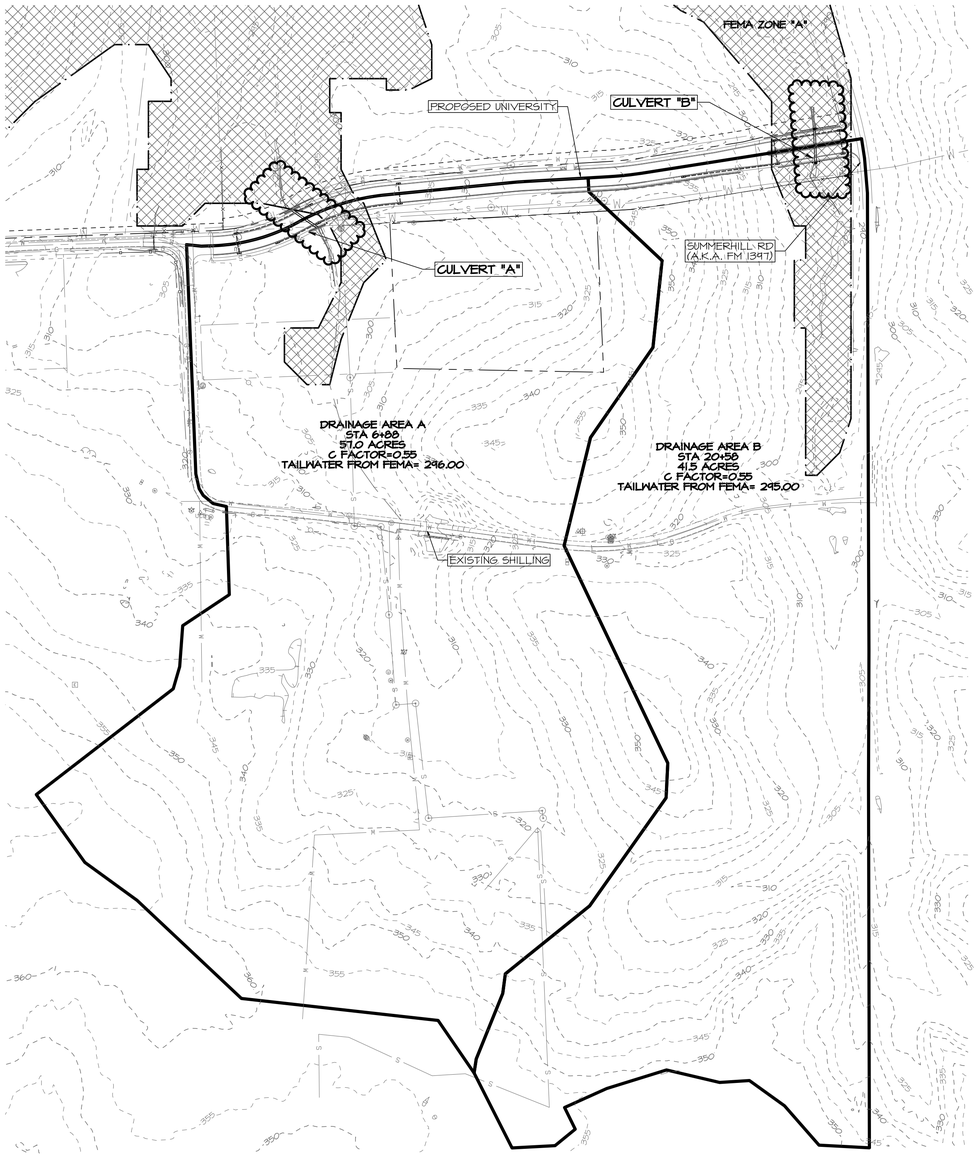

THE SEAL APPEARING ON THIS DOCUMENT WAS AUTHORIZED BY KAYLA R. WOOD, P.E. NO. 104859 ON 3/12/14. ALTERATION OF A SEALED DOCUMENT WITHOUT PRIOR NOTIFICATION TO THE RESPONSIBLE ENGINEER IS AN OFFENSE UNDER THE TEXAS ENGINEERING PRACTICE ACT.

STATE OF TEXAS
KAYLA R. WOOD
104859
REGISTERED
PROFESSIONAL ENGINEER

LEGEND

- RIGHT-OF-WAY / PROPERTY LINE
- EASEMENT LINE
- ROAD CENTER LINE
- OVERHEAD ELECTRIC LINE
- SEWER FORCE MAIN
- SEWER MAIN
- WATER MAIN
- SEWER MAIN (TO BE REMOVED)
- WATER MAIN (TO BE REMOVED)
- RETAINING WALL
- SILT FENCE
- ROCK FILTER DAM
- TOP OF BANK / SLOPE
- TOE OF SLOPE
- PROPOSED ELECTRIC CONDUIT
- PROPOSED CONTOUR
- GAS MAIN
- STORM DRAIN
- EXISTING SANITARY SEWER MANHOLE
- PROPOSED SANITARY SEWER MANHOLE
- POWER POLE
- PROPOSED LIGHT POLE

N

GRAPHIC SCALE 1"=200'
0 200

CULVERT "A" - 25-YEAR STORM 4'x3' R.B.C.					
HW Elev (FT)	TW Elev (FT)	TOTAL DISCHARGE (CFS)	CULVERT DISCHARGE (CFS)	ROAD DISCHARGE (CFS)	VELOCITY (FPS)
288.29	286.23	0.00	0.00	0	0.00
289.34	287.50	21.84	21.84	0	6.42
289.44	288.10	43.68	43.68	0	7.75
290.44	288.55	65.52	65.52	0	9.15
290.89	289.38	87.36	87.36	0	9.94
291.33	289.57	109.20	109.20	0	9.96
291.77	289.70	131.04	131.04	0	10.42
292.23	289.82	152.88	152.88	0	10.83
292.75	289.91	174.72	174.72	0	11.20
293.31	290.00	196.56	196.56	0	11.53
293.85	290.08	218.40	218.40	0	11.83

CULVERT "A" - 100-YEAR STORM 4'x3' R.B.C.					
HW Elev* (FT)	TW Elev (FT)	TOTAL DISCHARGE (CFS)	CULVERT DISCHARGE (CFS)	ROAD DISCHARGE (CFS)	VELOCITY (FPS)
296.00	296.00	0.00	0.00	0.00	0.00
296.00	296.00	21.84	1.88	19.96	0.16
296.00	296.00	43.68	2.65	41.03	0.22
296.00	296.00	65.52	3.26	62.26	0.27
296.00	296.00	87.36	3.79	83.57	0.32
296.00	296.00	109.20	4.24	104.96	0.35
296.00	296.00	131.04	4.64	126.4	0.39
296.01	296.00	152.88	5.05	147.83	0.42
296.01	296.00	174.72	5.38	169.34	0.45
296.01	296.00	177.34	5.42	171.92	0.45
296.01	296.00	218.40	6.01	212.39	0.50

* HEADWATER ELEVATION BECOMES EQUAL TO TAILWATER ELEVATION AS THE 100-YEAR STORM FLOW OVERTOPS THE ROAD AT AN ELEVATION OF 294.20. THIS HAS NO IMPACT ON THE FLOODPLAIN, AS BEFORE IT WAS AT AN ELEVATION OF 296, AND AFTER IT IS AT THE SAME ELEVATION.

INLET ELEVATION=288.41 FT
OUTLET ELEVATION=287.48 FT

CULVERT "B" - 25-YEAR STORM 4'x4' R.B.C.					
HW Elev (FT)	TW Elev (FT)	TOTAL DISCHARGE (CFS)	CULVERT DISCHARGE (CFS)	ROAD DISCHARGE (CFS)	VELOCITY (FPS)
279.21	276.40	0.00	0.00	0	0.00
280.35	277.54	15.00	15.00	0	4.94
281.02	277.88	30.00	30.00	0	11.40
281.60	278.12	45.00	45.00	0	11.60
282.11	278.31	60.00	60.00	0	12.35
282.59	278.48	75.00	75.00	0	12.96
283.06	278.63	90.00	90.00	0	13.48
283.54	278.76	105.00	105.00	0	13.95
284.06	278.88	120.00	120.00	0	14.35
284.62	279.56	135.00	135.00	0	14.71
285.23	279.61	150.00	150.00	0	15.07

CULVERT "B" - 100-YEAR STORM 4'x4' R.B.C.					
HW Elev* (FT)	TW Elev (FT)	TOTAL DISCHARGE (CFS)	CULVERT DISCHARGE (CFS)	ROAD DISCHARGE (CFS)	VELOCITY (FPS)
245.00	245.00	0.00	0.00	0.00	0.00
245.00	245.00	18.00	2.84	15.11	0.18
245.00	245.00	36.00	3.64	32.36	0.23
245.00	245.00	54.00	4.26	49.74	0.27
245.00	245.00	72.00	4.80	67.2	0.30
245.00	245.00	90.00	5.27	84.73	0.33
245.00	245.00	108.00	5.68	102.32	0.36
245.00	245.00	126.00	6.13	119.87	0.38
245.00	245.00	144.00	6.53	137.47	0.41
245.00	245.00	150.00	6.66	143.34	0.42
245.00	245.00	180.00	7.22	172.78	0.45

* HEADWATER ELEVATION BECOMES EQUAL TO TAILWATER ELEVATION AS THE 100-YEAR STORM FLOW OVERTOPS THE ROAD AT AN ELEVATION OF 291.73. THIS HAS NO IMPACT ON THE FLOODPLAIN, AS BEFORE IT WAS AT AN ELEVATION OF 245, AND AFTER IT IS AT THE SAME ELEVATION.

INLET ELEVATION=279.57 FT
OUTLET ELEVATION=277.53 FT

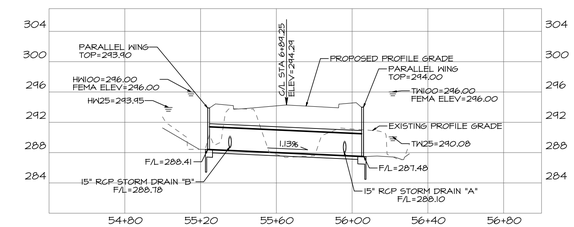

CULVERT "A"
83 LF 4'X3' R.B.C. WITH PARALLEL
WINGWALLS U/S & D/S

NOTE:

FOR THE 100-YEAR STORM, ROAD DISCHARGE IS NEGATED FOR CULVERT "A" AND CULVERT "B" BY BACKWATER FROM MCKINNEY BAYOU SPILLING OVER FROM DOWNSTREAM TO UPSTREAM AT A HIGHER ELEVATION THAN THE HEADWATER FROM THE ROAD. WATER WILL CONTINUE TO BACK-UP TO THE LIMITS SHOWN ON THE MAP, AS THE ROAD IS LOWER THAN THE FLOODPLAIN ELEVATION CAUSING NO ADVERSE AFFECT.

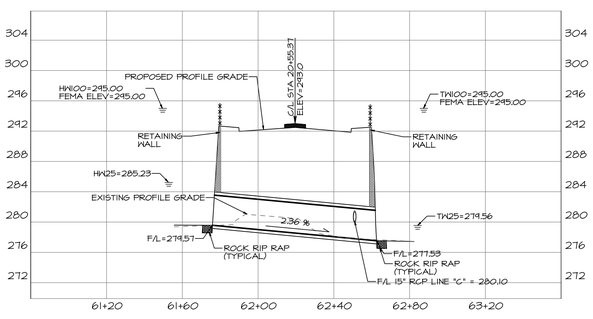

CULVERT "B"
87 LF 4'X4' R.B.C. WITH PARALLEL
WINGWALLS U/S & D/S

REVISIONS | DATE
1
2
3
4

MTG engineers & surveyors
TBPE FIRM F-1094
TBPLS FIRM 10194
9480 SUMMERHILL RD., P.O. BOX 3166
TEXARKANA, TEXAS 75504
P. 903.838.9393 F. 903.832.4700
www.mtgengineers.com

PROJECT: UNIVERSITY PH IV
DATE: 2/28/14
DESIGNED BY
CHECKED BY
APPROVED BY

DRAINAGE AREA OVERALL MAP

PHASE IV UNIVERSITY

DEPART. OF ENGINEER & INFRASTRUCTURE
CITY OF TEXARKANA, TEXAS

DRAWING

SHEET 16
OF 50

X:\2011 Projects\116019 University Ave Phase 4, City of Texarkana, TX\05 Engineering Design\2014 Design\Design_07.pro
Wed Mar 12, 2014 9:42AM

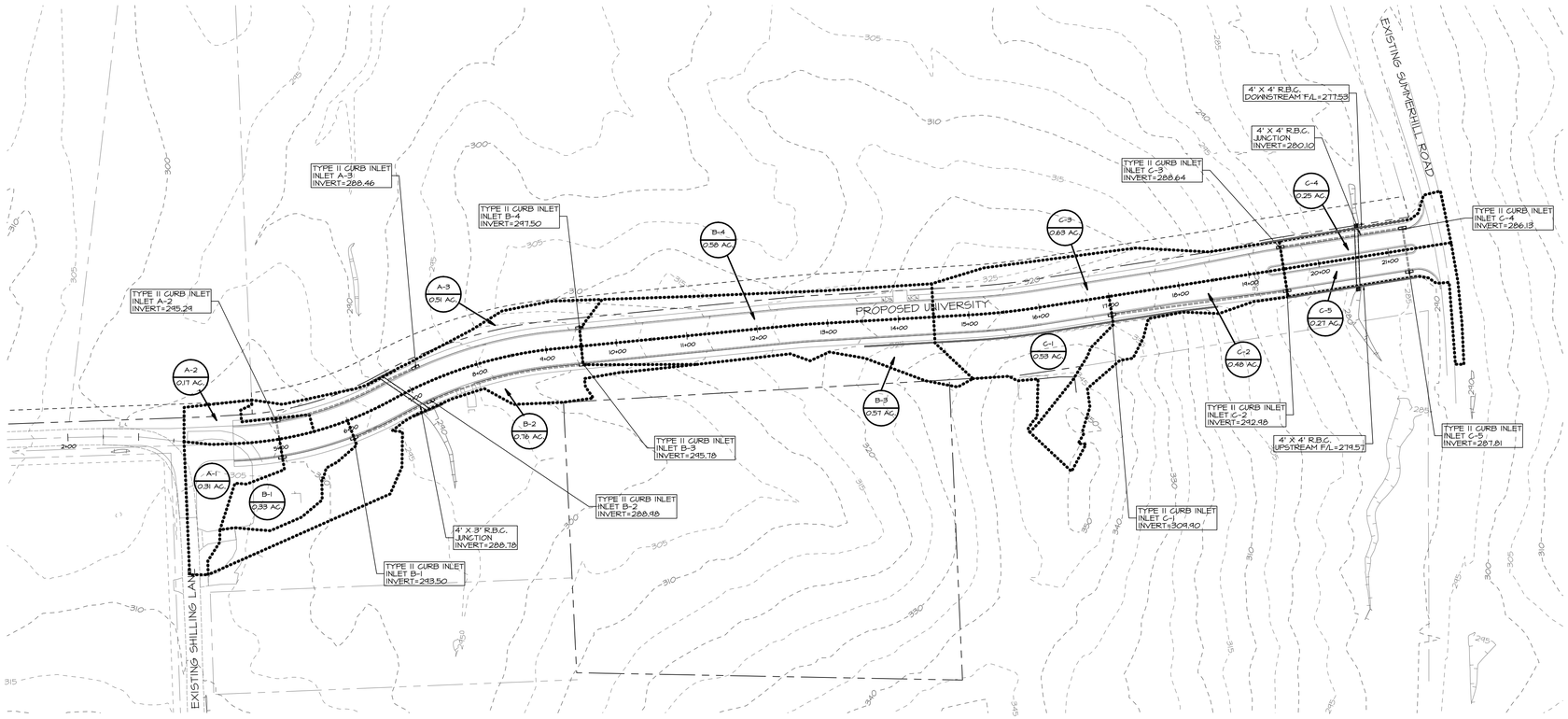

GRAPHIC SCALE 1"=100'

0 100

DRAINAGE LEGEND

A-1 — AREA NUMBER

0.21 AC. — ACREAGE

DRAINAGE DIVIDE

NOTE:
DRAINAGE CALCULATIONS SHOWN ON SHEET 18.

THE SEAL APPEARING ON THIS DOCUMENT WAS AUTHORIZED BY KAYLA R. WOOD, P.E. NO. 104859 ON 3/12/14. ALTERATION OF A SEALED DOCUMENT WITHOUT PRIOR NOTIFICATION TO THE RESPONSIBLE ENGINEER IS AN OFFENSE UNDER THE TEXAS ENGINEERING PRACTICE ACT.

STATE OF TEXAS
KAYLA R. WOOD
104859
REGISTERED
PROFESSIONAL ENGINEER

REVISIONS | DATE
1
2
3
4

MTG engineers & surveyors
TBPE FIRM F-1804
TBPLS FIRM 10194300
3450 SUMMERHILL RD., P.O. BOX 3166
TEXARKANA, TEXAS 75504
P: 903.838.4939 F: 903.832.1700
www.mtgengineers.com

PROJECT: UNIVERSITY PH IV
DATE: 2/28/14
DESIGNED BY
CHECKED BY
APPROVED BY

STREET DRAINAGE AREA CALCULATIONS

PHASE IV UNIVERSITY

DEPART. OF ENGINEER & INFRASTRUCTURE
CITY OF TEXARKANA, TEXAS

DRAWING
SHEET 17 OF 50

X:\2011 Projects\116019 University Ave Phase 4, City of Texarkana, TX\05 Engineering Design\2014 Design\Design_07.pro
Wed Mar 12, 2014 9:43AM

STORMDRAIN SYSTEMS "A" & "B"

Hydrologic Design for Storm Drain Lines "A" & "B"
Design Frequency of 5 Years

Runoff Computation for Design Frequency.

ID	C Value	Area (acre)	Tc (min)	Tc Used (min)	Intensity (in/hr)	Supply Q (cfs)	Total Q
A-1	0.7	0.31	10.00	10.00	6.93	0.000	1.499
A-2	0.7	0.17	10.00	10.00	6.93	0.000	0.835
A-3	0.7	0.51	10.00	10.00	6.93	0.000	2.494
B-1	0.7	0.33	10.00	10.00	6.93	0.000	1.577
B-2	0.7	0.76	10.00	10.00	6.93	0.000	3.688
B-3	0.75	0.57	10.00	10.00	6.93	0.000	2.964
B-4	0.7	0.58	10.00	10.00	6.93	0.000	2.819

On Grade Inlet Configuration Data

Inlet ID	Inlet Type	Inlet Length (ft)	Slopes Long (%)	Slopes Trans (%)	Gutter n	Gutter Depr. (ft)	Grate Width (ft)	Grate Type	Pond Width Allowed (ft)	Critic Elev.
A-1	Curb	10.00	4.00	2.00	0.014	0.33	n/a	n/a	12.00	299.84
A-2	Curb	10.00	4.00	2.00	0.014	0.33	n/a	n/a	12.00	299.82
B-1	Curb	10.00	2.75	2.00	0.014	0.33	n/a	n/a	12.00	295.81
B-3	Curb	10.00	5.00	2.00	0.014	0.33	n/a	n/a	12.00	300.52
B-4	Curb	10.00	5.00	2.00	0.014	0.33	n/a	n/a	12.00	300.52

On Grade Inlets Conmputation Data.

Inlet ID	Inlet Type	Total Q (cfs)	Intercept Capacity (cfs)	Q Bypass Allow (cfs)	Q Bypass Actual (cfs)	To Inlet ID	Required Length (ft)	Actual Length (ft)	Ponded Width
A-1	Curb	1.499	1.499	0.250	0.000	B-1	9.04	10.00	6.15
A-2	Curb	0.835	0.835	0.250	0.000	A-3	6.79	10.00	4.95
B-1	Curb	1.577	1.577	1.000	0.000	B-2	8.42	10.00	6.70
B-3	Curb	2.964	2.691	1.000	0.273	B-2	13.62	10.00	7.60
B-4	Curb	2.819	2.594	1.000	0.225	A-3	13.25	10.00	7.45

Sag Inlets Configuration Data.

Inlet ID	Inlet Type	Length/ Perim. (ft)	Grate Area (sf)	Left-Slope Long (%)	Left-Slope Trans (%)	Right-Slope Long (%)	Right-Slope Trans (%)	Gutter n	Gutter DeprW (ft)	Depth Allowed (ft)	Critic Elev.
A-3	Curb	10.00	n/a	0.75	2.00	0.75	2.00	0.014	1.50	0.50	294.23
B-2	Curb	10.00	n/a	0.87	2.00	1.46	2.00	0.014	1.50	0.50	294.23

Sag Inlets Computation Data.

Inlet ID	Inlet Type	Length (ft)	Grate Perim (ft)	Grate Area (sf)	Total Q (cfs)	Inlet Capacity (cfs)	Total Head (ft)	Ponded Width Left (ft)	Ponded Width Right (ft)
A-3	Curb	10.00	n/a	n/a	2.719	10.327	0.205	6.70	9.20
B-2	Curb	10.00	n/a	n/a	3.961	10.327	0.264	9.75	7.60

Cumulative Junction Discharge Computations

Node I.D.	Node Type	Weighted C-Value	Cumulat. Dr.Area (acres)	Cumulat. Tc (min)	Intens. (in/hr)	User Supply Q cfs)	Additional Q in Node (cfs)	Total Disch. (cfs)
A-1	Curb	0.700	0.31	10.00	6.93	0.000	0.00	1.499
A-3	Curb	0.700	0.51	10.00	6.93	0.000	0.00	2.494
JUNC1	JnctBx	0.709	3.23	10.75	6.72	0.000	0.00	15.386
A-2	Curb	0.700	0.48	10.12	6.90	0.000	0.00	2.322
JUNC2	JnctBx	0.713	2.24	10.49	6.79	0.000	0.00	10.821
B-1	Curb	0.700	0.33	10.00	6.93	0.000	0.00	1.577
B-2	Curb	0.715	1.91	10.48	6.79	0.000	0.00	9.281
B-3	Curb	0.725	1.15	10.10	6.90	0.000	0.00	5.757
B-4	Curb	0.700	0.58	10.00	6.93	0.000	0.00	2.819
OUT	Outlt	0.709	3.23	10.75	6.72	0.000	0.00	15.386

Conveyance Configuration Data

Run#	Node I.D. US	Node I.D. DS	Flowline Elev. US (ft)	Flowline Elev. DS (ft)	Shape	#	Span (ft)	Rise (ft)	Length (ft)	Slope (%)	n_value
1	A-1	A-2	297.06	295.29	Circ	1	0.00	1.25	50.00	3.54	0.013
2	A-2	JUNC1	295.29	288.10	Circ	1	0.00	1.25	159.75	4.51	0.013
3	A-3	JUNC1	288.46	288.10	Circ	1	0.00	1.25	38.45	0.94	0.013
4	B-1	JUNC2	293.50	288.78	Circ	1	0.00	1.25	99.08	4.77	0.013
5	B-4	B-3	297.50	295.78	Circ	1	0.00	1.25	50.00	3.44	0.013
6	B-3	B-2	295.78	288.98	Circ	1	0.00	1.25	212.76	3.20	0.013
7	B-2	JUNC2	288.98	288.78	Circ	1	0.00	1.25	6.52	3.07	0.013
8	JUNC2	JUNC1	288.28	288.10	Box	1	4.00	3.00	61.50	0.29	0.013
9	JUNC1	OUT	287.60	287.19	Box	1	4.00	3.00	33.24	1.23	0.013

Conveyance Hydraulic Computations. Tailwater = 0.000 (ft)

Run#	Hydraulic Gradeline US Elev (ft)	Hydraulic Gradeline DS Elev (ft)	Fr.Slope (%)	Depth Unif. (ft)	Depth Actual (ft)	Velocity Unif. (f/s)	Velocity Actual (f/s)	Q (cfs)	Cap (cfs)	Junc Loss (ft)
1	297.36	295.64	0.054	0.30	0.35	6.73	5.38	1.50	12.16	0.000
2	295.64	288.45	0.129	0.35	0.35	8.32	8.32	2.32	13.71	0.000
3	289.01	288.65	0.149	0.55	0.55	4.80	4.80	2.49	6.25	0.000
4	293.78	289.06	0.060	0.28	0.28	7.58	7.58	1.58	14.11	0.000
5	297.92	296.40	0.190	0.41	0.62	7.98	4.61	2.82	11.99	0.000
6	296.40	289.84	0.794	0.62	0.86	9.41	6.37	5.76	11.55	0.000
7	289.84	289.64	2.063	0.86	0.86	10.28	10.28	9.28	11.32	0.000
8	288.96	288.71	0.008	0.68	0.68	3.98	3.98	10.82	66.96	0.000
9	288.14	287.73	0.015	0.54	0.54	7.17	7.17	15.39	137.47	0.000

Analysis Frequency of 10 Years

Runoff Computation for Analysis Frequency.

ID	C Value	Area (acre)	Tc (min)	Tc Used (min)	Intensity (in/hr)	Supply Q (cfs)	Total Q
A-1	0.7	0.31	10.00	10.00	7.71	0.000	1.669
A-2	0.7	0.17	10.00	10.00	7.71	0.000	0.929
A-3	0.7	0.51	10.00	10.00	7.71	0.000	2.776
B-1	0.7	0.33	10.00	10.00	7.71	0.000	1.755
B-2	0.7	0.76	10.00	10.00	7.71	0.000	4.104
B-3	0.75	0.57	10.00	10.00	7.71	0.000	3.298
B-4	0.7	0.58	10.00	10.00	7.71	0.000	3.137

On Grade Inlet Configuration Data

Inlet ID	Inlet Type	Inlet Length (ft)	Slopes Long (%)	Slopes Trans (%)	Gutter n	Gutter Depr. (ft)	Grate Width (ft)	Grate Type	Pond Width Allowed (ft)	Critic Elev.
A-1	Curb	10.00	4.00	2.00	0.014	0.33	n/a	n/a	12.00	299.84
A-2	Curb	10.00	4.00	2.00	0.014	0.33	n/a	n/a	12.00	299.82
B-1	Curb	10.00	2.75	2.00	0.014	0.33	n/a	n/a	12.00	295.81
B-3	Curb	10.00	5.00	2.00	0.014	0.33	n/a	n/a	12.00	300.52
B-4	Curb	10.00	5.00	2.00	0.014	0.33	n/a	n/a	12.00	300.52

On Grade Inlets Conmputation Data.

Inlet ID	Inlet Type	Total Q (cfs)	Intercept Capacity (cfs)	Q Bypass Allow (cfs)	Q Bypass Actual (cfs)	To Inlet ID	Required Length (ft)	Actual Length (ft)	Ponded Width
A-1	Curb	1.669	1.669	0.250	0.000	B-1	9.54	10.00	6.40
A-2	Curb	0.929	0.929	0.250	0.000	A-3	7.14	10.00	5.15
B-1	Curb	1.755	1.755	1.000	0.000	B-2	8.92	10.00	7.00
B-3	Curb	3.298	2.902	1.000	0.396	B-2	14.45	10.00	7.95
B-4	Curb	3.137	2.802	1.000	0.336	A-3	14.06	10.00	7.80

Sag Inlets Configuration Data.

Inlet ID	Inlet Type	Length/ Perim. (ft)	Grate Area (sf)	Left-Slope Long (%)	Left-Slope Trans (%)	Right-Slope Long (%)	Right-Slope Trans (%)	Gutter n	Gutter DeprW (ft)	Depth Allowed (ft)	Critic Elev.
A-3	Curb	10.00	n/a	0.75	2.00	0.75	2.00	0.014	1.50	0.50	294.23
B-2	Curb	10.00	n/a	0.87	2.00	1.46	2.00	0.014	1.50	0.50	294.23

Sag Inlets Computation Data.

Inlet ID	Inlet Type	Length (ft)	Grate Perim (ft)	Grate Area (sf)	Total Q (cfs)	Inlet Capacity (cfs)	Total Head (ft)	Ponded Width Left (ft)	Ponded Width Right (ft)
A-3	Curb	10.00	n/a	n/a	3.111	10.327	0.225	7.05	9.70
B-2	Curb	10.00	n/a	n/a	4.500	10.327	0.287	10.20	7.95

Cumulative Junction Discharge Computations

Node I.D.	Node Type	Weighted C-Value	Cumulat. Dr.Area (acres)	Cumulat. Tc (min)	Intens. (in/hr)	User Supply Q cfs)	Additional Q in Node (cfs)	Total Disch. (cfs)
A-1	Curb	0.700	0.31	10.00	7.71	0.000	0.00	1.669
A-3	Curb	0.700	0.51	10.00	7.71	0.000	0.00	2.776
JUNC1	JnctBx	0.709	3.23	10.73	7.49	0.000	0.00	17.146
A-2	Curb	0.700	0.48	10.12	7.68	0.000	0.00	2.584
JUNC2	JnctBx	0.713	2.24	10.48	7.56	0.000	0.00	12.053
B-1	Curb	0.700	0.33	10.00	7.71	0.000	0.00	1.755
B-2	Curb	0.715	1.91	10.47	7.57	0.000	0.00	10.337
B-3	Curb	0.725	1.15	10.10	7.68	0.000	0.00	6.408
B-4	Curb	0.700	0.58	10.00	7.71	0.000	0.00	3.137
OUT	Outlt	0.709	3.23	10.73	7.49	0.000	0.00	17.146

Conveyance Configuration Data

Run#	Node I.D. US	Node I.D. DS	Flowline Elev. US (ft)	Flowline Elev. DS (ft)	Shape	#	Span (ft)	Rise (ft)	Length (ft)	Slope (%)	n_value
1	A-1	A-2	297.06	295.29	Circ	1	0.00	1.25	50.00	3.54	0.013
2	A-2	JUNC1	295.29	288.10	Circ	1	0.00	1.25	159.75	4.51	0.013
3	A-3	JUNC1	288.46	288.10	Circ	1	0.00	1.25	38.45	0.94	0.013
4	B-1	JUNC2	293.50	288.78	Circ	1	0.00	1.25	99.08	4.77	0.013
5	B-4	B-3	297.50	295.78	Circ	1	0.00	1.25	50.00	3.44	0.013
6	B-3	B-2	295.78	288.98	Circ	1	0.00	1.25	212.76	3.20	0.013
7	B-2	JUNC2	288.98	288.78	Circ	1	0.00	1.25	6.52	3.07	0.013
8	JUNC2	JUNC1	288.28	288.10	Box	1	4.00	3.00	61.50	0.29	0.013
9	JUNC1	OUT	287.60	287.19	Box	1	4.00	3.00	33.24	1.23	0.013

Conveyance Hydraulic Computations. Tailwater = 0.000 (ft)

Run#	Hydraulic Gradeline US Elev (ft)	Hydraulic Gradeline DS Elev (ft)	Fr.Slope (%)	Depth Unif. (ft)	Depth Actual (ft)	Velocity Unif. (f/s)	Velocity Actual (f/s)	Q (cfs)	Cap (cfs)	Junc Loss (ft)
1	297.37	295.66	0.067	0.31	0.37	6.94	5.53	1.67	12.16	0.000
2	295.66	288.47	0.160	0.37	0.37	8.57	8.57	2.58	13.71	0.000
3	289.04	288.68	0.185	0.58	0.58	4.94	4.94	2.78	6.25	0.000
4	293.80	289.08	0.074	0.30	0.30	7.83	7.83	1.75	14.11	0.000
5	297.94	296.45	0.236	0.44	0.67	8.22	4.73	3.14	11.99	0.000
6	296.45	289.92	0.984	0.67	0.94	9.65	6.47	6.41	11.55	0.000
7	289.92	289.72	2.560	0.94	0.94	10.44	10.44	10.34	11.32	0.000
8	289.02	288.76	0.009	0.74	0.74	4.08	4.08	12.05	66.96	0.000
9	288.18	287.77	0.019	0.58	0.58	7.43	7.43	17.15	137.47	0.000

STORMDRAIN SYSTEMS "C"

Hydrologic Design for Storm Drain Line "C"
Design Frequency of 5 Years

Runoff Computation for Design Frequency.

ID	C Value	Area (acre)	Tc (min)	Tc Used (min)	Intensity (in/hr)	Supply Q (cfs)	Total Q
C-1	0.5	0.53	10.00	10.00	6.93	0.000	1.830
C-2	0.6	0.48	10.00	10.00	6.93	0.000	1.976
C-3	0.7	0.63	10.00	10.00	6.93	0.000	3.077
C-4	0.8	0.25	10.00	10.00	6.93	0.000	1.375
C-5	0.85	0.27	10.00	10.00	6.93	0.000	1.579

On Grade Inlet Configuration Data

Inlet ID	Inlet Type	Inlet Length (ft)	Slopes Long (%)	Slopes Trans (%)	Gutter n	Gutter Depr. (ft)	Grate Width (ft)	Grate Type	Pond Width Allowed (ft)	Critic Elev.
C-1	Curb	10.00	5.00	2.00	0.014	0.33	n/a	n/a	12.00	313.13
C-2	Curb	10.00	5.50	2.00	0.014	0.33	n/a	n/a	12.00	296.62
C-3	Curb	10.00	5.50	2.00	0.014	0.33	n/a	n/a	12.00	296.62

On Grade Inlets Conmputation Data.

Inlet ID	Inlet Type	Total Q (cfs)	Intercept Capacity (cfs)	Q Bypass Allow (cfs)	Q Bypass Actual (cfs)	To Inlet ID	Required Length (ft)	Actual Length (ft)	Ponded Width
C-1	Curb	1.830	1.820	1.000	0.010	C-2	10.59	10.00	6.35
C-2	Curb	1.986	1.944	1.000	0.041	C-5	11.32	10.00	6.45
C-3	Curb	3.077	2.730	1.000	0.347	C-4	14.23	10.00	7.60

Sag Inlets Configuration Data.

Inlet ID	Inlet Type	Length/ Perim. (ft)	Grate Area (sf)	Left-Slope Long (%)	Left-Slope Trans (%)	Right-Slope Long (%)	Right-Slope Trans (%)	Gutter n	Gutter DeprW (ft)	Depth Allowed (ft)	Critic Elev.
C-4	Curb	10.00	n/a	1.00	2.00	1.00	2.00	0.014	1.50	0.50	290.61
C-5	Curb	10.00	n/a	1.00	2.00	1.00	2.00	0.014	1.50	0.50	290.98

Sag Inlets Computation Data.

Inlet ID	Inlet Type	Length (ft)	Grate Perim (ft)	Grate Area (sf)	Total Q (cfs)	Inlet Capacity (cfs)	Total Head (ft)	Ponded Width Left (ft)	Ponded Width Right (ft)
C-4	Curb	10.00	n/a	n/a	1.722	10.327	0.151	6.50	6.50
C-5	Curb	10.00	n/a	n/a	1.620	10.327	0.145	6.35	6.35

Cumulative Junction Discharge Computations

Node I.D.	Node Type	Weighted C-Value	Cumulat. Dr.Area (acres)	Cumulat. Tc (min)	Intens. (in/hr)	User Supply Q cfs)	Additional Q in Node (cfs)	Total Disch. (cfs)
C-1	Curb	0.500	0.53	10.00	6.93	0.000	0.00	1.830
C-2	Curb	0.547	1.00	10.44	6.81	0.000	0.00	3.736
C-3	Curb	0.606	1.64	10.53	6.78	0.000	0.00	6.731
C-4	Curb	0.826	0.52	10.16	6.89	0.000	0.00	2.935
C-5	Curb	0.850	0.27	10.00	6.93	0.000	0.00	1.579
JNCT	JnctBx	0.659	2.15	10.65	6.75	0.000	0.00	9.573
OUT	Outlt	0.659	2.15	10.65	6.75	0.000	0.00	9.573

Conveyance Configuration Data

Run#	Node I.D. US	Node I.D. DS	Flowline Elev. US (ft)	Flowline Elev. DS (ft)	Shape	#	Span (ft)	Rise (ft)	Length (ft)	Slope (%)	n_value
1	C-1	C-2	309.90	292.98	Circ	1	0.00	1.25	240.00	7.07	0.013
2	C-2	C-3	292.98	288.64	Circ	1	0.00	1.25	60.00	7.25	0.013
3	C-3	JNCT	288.64	280.10	Circ	1	0.00	1.25	102.00	8.40	0.013
4	C-5	C-4	287.81	286.13	Circ	1	0.00	1.25	60.00	2.80	0.013
5	C-4	JNCT	286.13	280.10	Circ	1	0.00	1.25	58.77	10.31	0.013
6	JNCT	OUT	278.10	277.53	Box	1	4.00	3.00	1.00	69.37	0.013

Conveyance Hydraulic Computations. Tailwater = 0.000 (ft)

Run#	Hydraulic Gradeline US Elev (ft)	Hydraulic Gradeline DS Elev (ft)	Fr.Slope (%)	Depth Unif. (ft)	Depth Actual (ft)	Velocity Unif. (f/s)	Velocity Actual (f/s)	Q (cfs)	Cap (cfs)	Junc Loss (ft)
1	310.18	293.38	0.080	0.28	0.40	9.13	5.48	1.83	17.18	0.000
2	293.38	289.16	0.334	0.39	0.52	11.28	7.77	3.74	17.40	0.000
3	289.16	280.62	1.086	0.52	0.52	14.00	14.00	6.73	18.73	0.000
4	288.13	286.45	0.060	0.32	0.32	6.29	6.29	1.58	10.81	0.000
5	286.45	280.42	0.206	0.32	0.32	11.94	11.94	2.93	20.75	0.000
6	278.21	277.64	0.006	0.11	0.11	21.36	21.36	9.57	1030.91	0.000

Analysis Frequency of 10 Years

Runoff Computation for Analysis Frequency.

ID	C Value	Area (acre)	Tc (min)	Tc Used (min)	Intensity (in/hr)	Supply Q (cfs)	Total Q
C-1	0.5	0.53	10.00	10.00	7.71	0.000	2.037
C-2	0.6	0.48	10.00	10.00	7.71	0.000	2.199
C-3	0.7	0.63	10.00	10.00	7.71	0.000	3.424
C-4	0.8	0.25	10.00	10.00	7.71	0.000	1.530
C-5	0.85	0.27	10.00	10.00	7.71	0.000	1.757

On Grade Inlet Configuration Data

Inlet ID	Inlet Type	Inlet Length (ft)	Slopes Long (%)	Slopes Trans (%)	Gutter n	Gutter Depr. (ft)	Grate Width (ft)	Grate Type	Pond Width Allowed (ft)	Critic Elev.
C-1	Curb	10.00	5.00	2.00	0.014	0.33	n/a	n/a	12.00	313.13
C-2	Curb	10.00	5.50	2.00	0.014	0.33	n/a	n/a	12.00	296.62
C-3	Curb	10.00	5.50	2.00	0.014	0.33	n/a	n/a	12.00	296.62

On Grade Inlets Conmputation Data.

Inlet ID	Inlet Type	Total Q (cfs)	Intercept Capacity (cfs)	Q Bypass Allow (cfs)	Q Bypass Actual (cfs)	To Inlet ID	Required Length (ft)	Actual Length (ft)	Ponded Width
C-1	Curb	2.037	2.001	1.000	0.036	C-2	11.18	10.00	6.60
C-2	Curb	2.234	2.143	1.000	0.091	C-5	12.03	10.00	6.75
C-3	Curb	3.424	2.941	1.000	0.482	C-4	15.07	10.00	7.90

Sag Inlets Configuration Data.

Inlet ID	Inlet Type	Length/ Perim. (ft)	Grate Area (sf)	Left-Slope Long (%)	Left-Slope Trans (%)	Right-Slope Long (%)	Right-Slope Trans (%)	Gutter n	Gutter DeprW (ft)	Depth Allowed (ft)	Critic Elev.
C-4	Curb	10.00	n/a	1.00	2.00	1.00	2.00	0.014	1.50	0.50	290.61
C-5	Curb	10.00	n/a	1.00	2.00	1.00	2.00	0.014	1.50	0.50	290.98

Sag Inlets Computation Data.

Inlet ID	Inlet Type	Length (ft)	Grate Perim (ft)	Grate Area (sf)	Total Q (cfs)	Inlet Capacity (cfs)	Total Head (ft)	Ponded Width Left (ft)	Ponded Width Right (ft)
C-4	Curb	10.00	n/a	n/a	2.013	10.327	0.168	6.85	6.85
C-5	Curb	10.00	n/a	n/a	1.848	10.327	0.159	6.65	6.65

Cumulative Junction Discharge Computations

Node I.D.	Node Type	Weighted C-Value	Cumulat. Dr.Area (acres)	Cumulat. Tc (min)	Intens. (in/hr)	User Supply Q cfs)	Additional Q in Node (cfs)	Total Disch. (cfs)
C-1	Curb	0.500	0.53	10.00	7.71	0.000	0.00	2.037
C-2	Curb	0.547	1.00	10.43	7.58	0.000	0.00	4.161
C-5	Curb	0.850	0.27	10.00	7.71	0.000	0.00	1.757
C-3	Curb	0.606	1.64	10.51	7.55	0.000	0.00	7.498
C-4	Curb	0.826	0.52	10.15	7.66	0.000	0.00	3.267
JNCT	JnctBx	0.659	2.15	10.63	7.52	0.000	0.00	10.666
OUT	Outlt	0.659	2.15	10.63	7.52	0.000	0.00	10.666

Conveyance Configuration Data

Run#	Node I.D. US	Node I.D. DS	Flowline Elev. US (ft)	Flowline Elev. DS (ft)	Shape	#	Span (ft)	Rise (ft)	Length (ft)	Slope (%)	n_value
1	C-1	C-2	309.90	292.98	Circ	1	0.00	1.25	240.00	7.07	0.013
2	C-2	C-3	292.98	288.64	Circ	1	0.00	1.25	60.00	7.25	0.013
3	C-3	JNCT	288.64	280.10	Circ	1	0.00	1.25	102.00	8.40	0.013
4	C-5	C-4	287.81	286.13	Circ	1	0.00	1.25	60.00	2.80	0.013
5	C-4	JNCT	286.13	280.10	Circ	1	0.00	1.25	58.77	10.31	0.013
6	JNCT	OUT	278.10	277.53	Box	1	4.00	3.00	1.00	69.37	0.013

Conveyance Hydraulic Computations. Tailwater = 0.000 (ft)

Run#	Hydraulic Gradeline US Elev (ft)	Hydraulic Gradeline DS Elev (ft)	Fr.Slope (%)	Depth Unif. (ft)	Depth Actual (ft)	Velocity Unif. (f/s)	Velocity Actual (f/s)	Q (cfs)	Cap (cfs)	Junc Loss (ft)
1	310.19	293.40	0.099	0.29	0.42	9.38	5.63	2.04	17.18	0.000
2	293.40	289.19	0.415	0.42	0.55	11.64	8.00	4.16	17.40	0.000
3	289.19	280.65	1.347	0.55	0.55	14.42	14.42	7.50	18.73	0.000
4	288.15	286.47	0.074	0.34	0.34	6.49	6.49	1.76	10.81	0.000
5	286.47	280.44	0.256	0.34	0.34	12.34	12.34	3.27	20.75	0.000
6	278.22	277.65	0.007	0.12	0.12	22.34	22.34	10.67	1030.91	0.000

THE SEAL APPEARING ON THIS DOCUMENT WAS AUTHORIZED BY KAYLA R. WOOD, P.E. NO. 104859 ON 3/12/14. ALTERATION OF A SEALED DOCUMENT WITHOUT PRIOR NOTIFICATION TO THE RESPONSIBLE ENGINEER IS AN OFFENSE UNDER THE TEXAS ENGINEERING PRACTICE ACT.

STATE OF TEXAS
KAYLA R. WOOD
104859
REGISTERED
PROFESSIONAL ENGINEER

REVISIONS | DATE
1
2
3
4

MTG engineers & surveyors
TBPE FIRM NO. F-354
5930 SUMMERHILL RD. | P.O. BOX 3786
TEXARKANA TEXAS 75501
P 903.838.8533 | F 903.832.4700
www.mtgengineers.com

PROJECT: UNIVERSITY PH IV
DATE: 2/28/14
DESIGNED BY
CHECKED BY
APPROVED BY

DRAINAGE CALCULATIONS

PHASE IV UNIVERSITY
DEPART. OF ENGINEER & INFRASTRUCTURE
CITY OF TEXARKANA, TEXAS

DRAWING
SHEET 18 OF 50

X:\2011 Projects\116019 University Ave Phase 4, City of Texarkana, TX\05 Engineering Design\2014 Design\Design_07.pro
Wed Mar 12, 2014 9:43AM

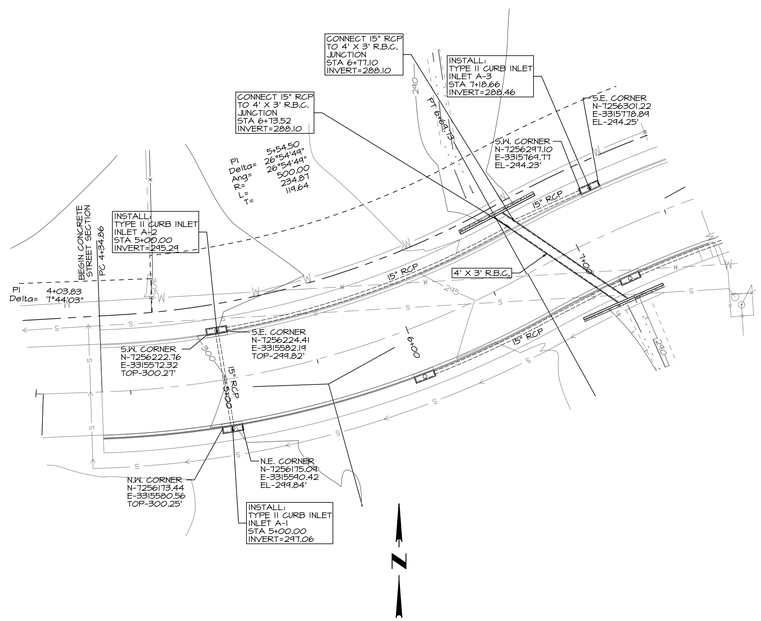

STORM DRAIN LINE "A" PLAN VIEW

Scale: 1" = 40'

ALL JOINTS SHALL BE WRAPPED.

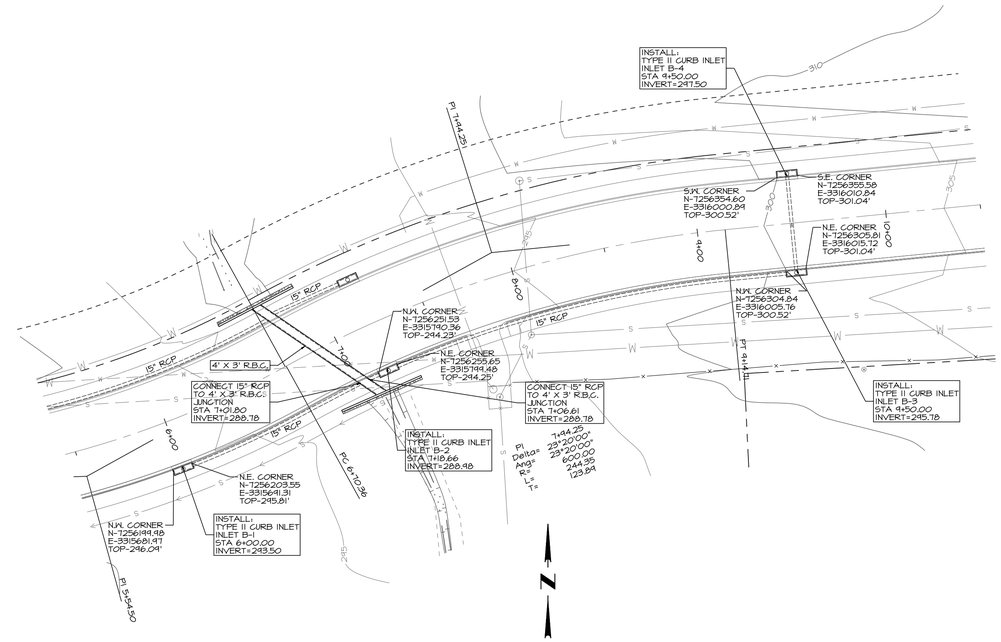

STORM DRAIN LINE "B" PLAN VIEW

Scale: 1" = 40'

ALL JOINTS SHALL BE WRAPPED.

LEGEND

- RIGHT-OF-WAY / PROPERTY LINE
- EASEMENT LINE
- ROAD CENTER LINE
- OE — OVERHEAD ELECTRIC LINE
- S — SEWER FORCE MAIN
- S — SEWER MAIN
- W — WATER MAIN
- S — SEWER MAIN (TO BE REMOVED)
- W — WATER MAIN (TO BE REMOVED)
- RETAINING WALL
- SF — SILT FENCE
- ROCK FILTER DAM
- TOP OF BANK / SLOPE
- TOE OF SLOPE
- UE — PROPOSED ELECTRIC CONDUIT
- 310 — PROPOSED CONTOUR
- G — GAS MAIN
- STORM DRAIN
- EXISTING SANITARY SEWER MANHOLE
- PROPOSED SANITARY SEWER MANHOLE
- POWER POLE
- PROPOSED LIGHT POLE

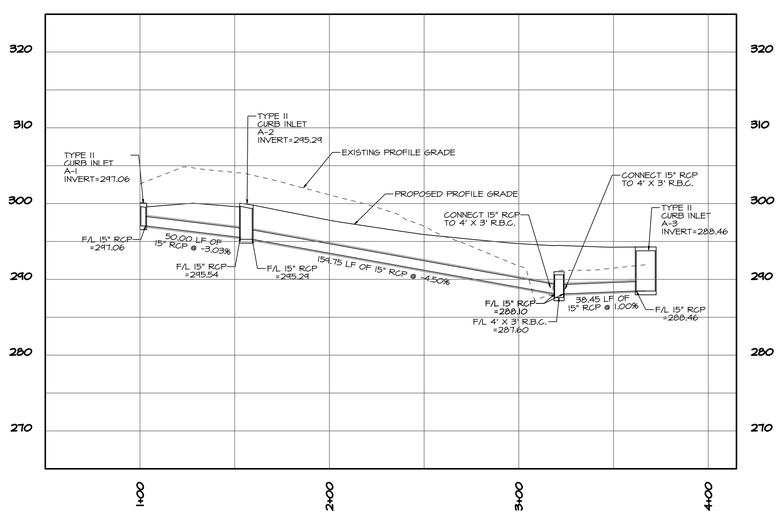

STORM DRAIN LINE "A" PROFILE VIEW

Horizontal Scale: 1" = 40'

Vertical Scale: 1" = 10'

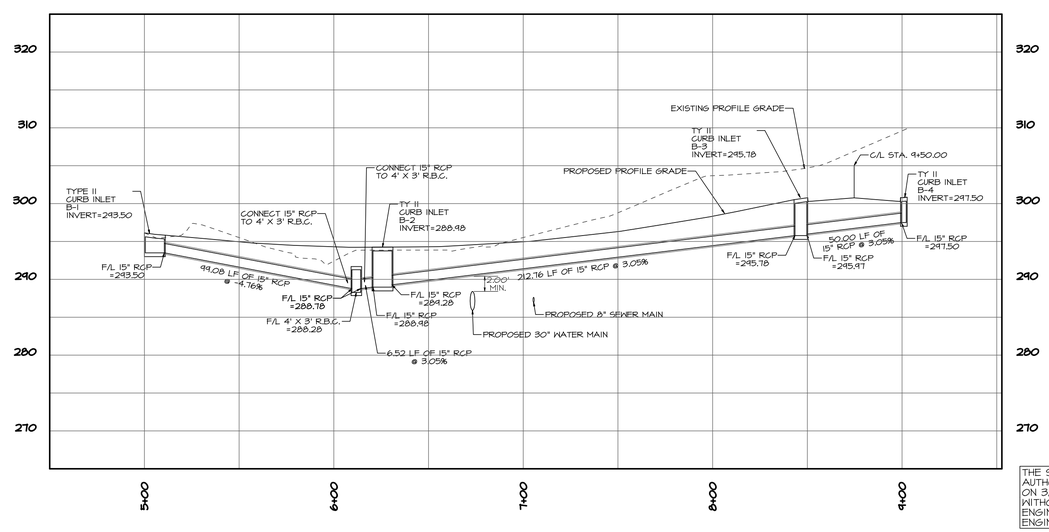

STORM DRAIN LINE "B" PROFILE VIEW

Horizontal Scale: 1" = 40'

Vertical Scale: 1" = 10'

THE SEAL APPEARING ON THIS DOCUMENT WAS AUTHORIZED BY KAYLA R. WOOD, P.E. NO. 104859 ON 3/12/14. ALTERATION OF A SEALED DOCUMENT WITHOUT PRIOR NOTIFICATION TO THE RESPONSIBLE ENGINEER IS AN OFFENSE UNDER THE TEXAS ENGINEERING PRACTICE ACT.

STATE OF TEXAS — KAYLA R. WOOD — 104859 — REGISTERED PROFESSIONAL ENGINEER

REVISIONS	DATE
1	
2	
3	
4	

MTG engineers & surveyors
TBPE FIRM F-1584 TBPLS FIRM 10194300
9450 SH 6 BRYAN, P.O. BOX 3166
BRYAN, TEXAS 77805
P. 979.268.0393 F. 979.268.0398
www.mtgengineers.com

PROJECT: UNIVERSITY PH IV
DATE: 2/28/14
DESIGNED BY
CHECKED BY
APPROVED BY

STORM DRAIN "A" & "B" PLAN AND PROFILE

PHASE IV UNIVERSITY

DEPART. OF ENGINEER & INFRASTRUCTURE
CITY OF TEXARKANA, TEXAS

DRAWING

SHEET 19 OF 50

X:\2011 Projects\116019 University Ave Phase 4, City of Texarkana, TX\05 Engineering Design\2014 Design\Design_07.pro
Wed Mar 12, 2014 9:44AM

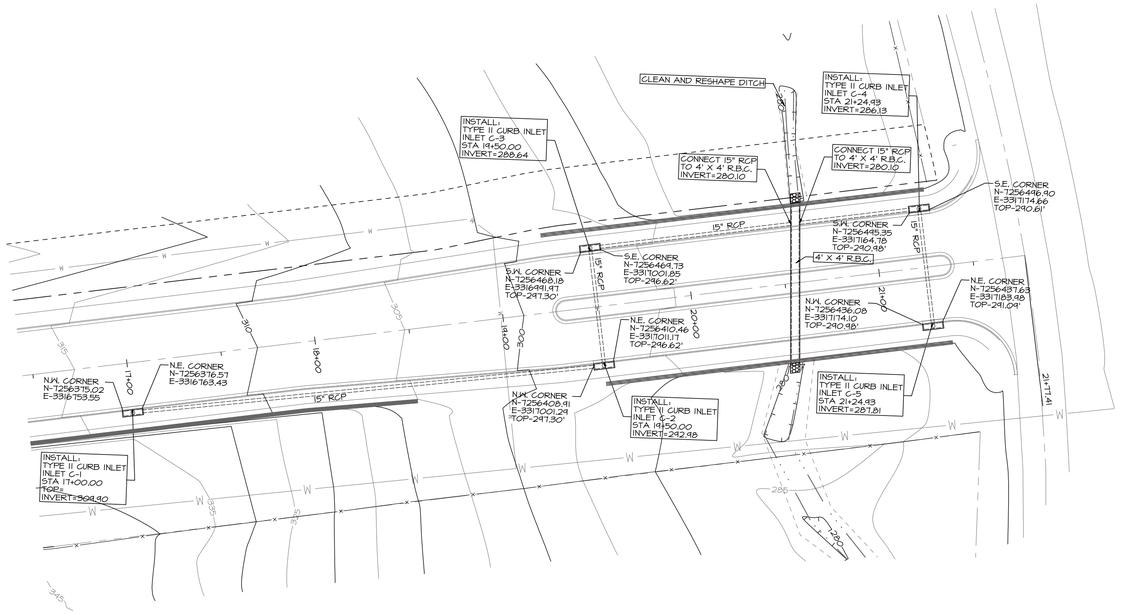

STORM DRAIN LINE "C"
PLAN VIEW

Scale: 1" = 40'
ALL JOINTS SHALL BE WRAPPED.

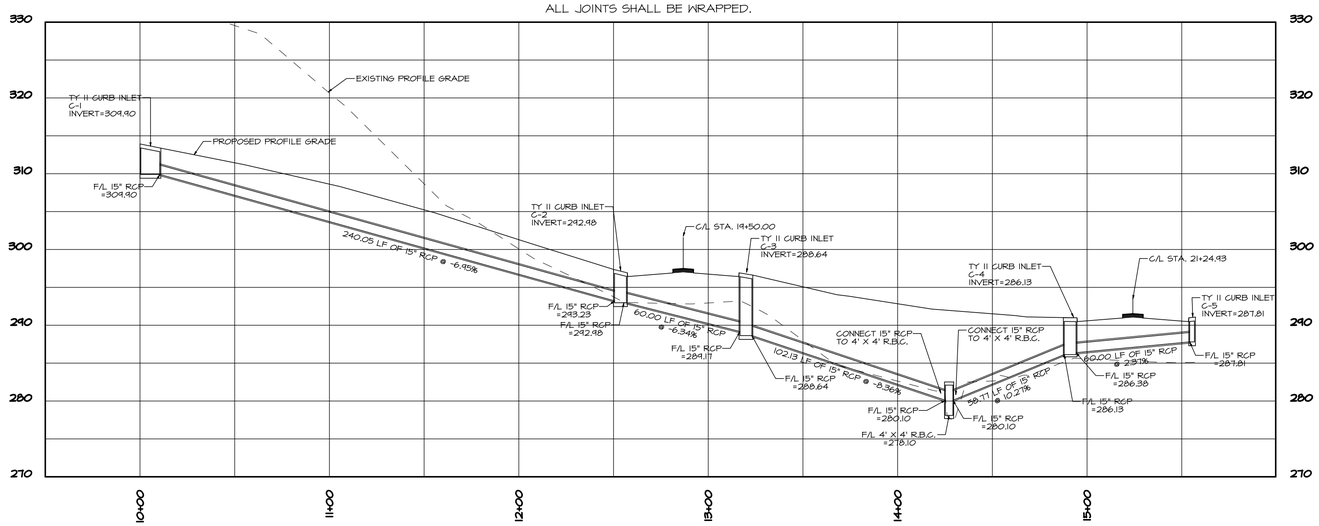

STORM DRAIN LINE "C"
PROFILE VIEW

Horizontal Scale: 1" = 40'
Vertical Scale: 1" = 10'

LEGEND

- RIGHT-OF-WAY / PROPERTY LINE
- EASEMENT LINE
- ROAD CENTER LINE
- OVERHEAD ELECTRIC LINE
- SEWER FORCE MAIN
- SEWER MAIN
- WATER MAIN
- SEWER MAIN (TO BE REMOVED)
- WATER MAIN (TO BE REMOVED)
- RETAINING WALL
- SILT FENCE
- ROCK FILTER DAM
- TOP OF BANK / SLOPE
- TOE OF SLOPE
- PROPOSED ELECTRIC CONDUIT
- PROPOSED CONTOUR
- GAS MAIN
- STORM DRAIN
- EXISTING SANITARY SEWER MANHOLE
- PROPOSED SANITARY SEWER MANHOLE
- POWER POLE
- PROPOSED LIGHT POLE

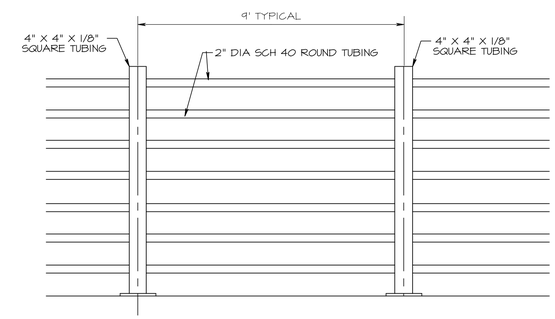

TYPICAL POST & RAILING TEMPLATE
NOT TO SCALE

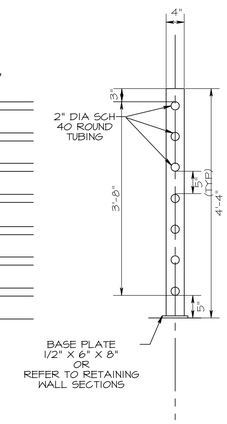

SECTION @ 4" POST
NOT TO SCALE

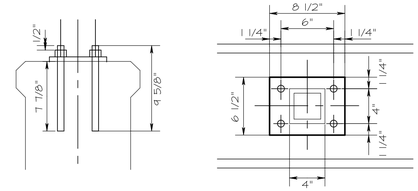

BASE PLATE DETAIL
NOT TO SCALE

ANCHOR BOLTS SHALL BE INSTALLED UTILIZING HILTI HIT-HY 150 MAX FAST CURE HYBRID ADHESIVE. ANCHOR ROD SHALL BE STAINLESS STEEL THREADED ROD (HAS-R 304 3/4 X 9 5/8) INSTALLED ACCORDING TO MANUFACTURER'S RECOMMENDATIONS.

CONTRACTOR MAY, AT THE APPROVAL BY THE CITY, REDUCE THE AMOUNT OF ANCHOR ROD ABOVE BOLT HEAD. THIS MUST BE ACCOMPLISHED BY INCREASING EMBEDMENT LENGTH. AT NO TIME SHALL THE ANCHOR BOLT BE CUT TO SHORTEN OR REDUCE EMBEDMENT LENGTH.

THE SEAL APPEARING ON THIS DOCUMENT WAS AUTHORIZED BY KAYLA R. WOOD, P.E. NO. 104859 ON 3/12/14. ALTERATION OF A SEALED DOCUMENT WITHOUT PRIOR NOTIFICATION TO THE RESPONSIBLE ENGINEER IS AN OFFENSE UNDER THE TEXAS ENGINEERING PRACTICE ACT.

STATE OF TEXAS
KAYLA R. WOOD
104859
REGISTERED PROFESSIONAL ENGINEER

REVISIONS

		DATE
1		
2		
3		
4		

MTG Engineers & Surveyors
TBPE FIRM F-10164
TBPLS FIRM 10194
9480 SUMMERHILL RD., P.O. BOX 3186
TEXARKANA, TEXAS 75504
P. 903.838.9939 F. 903.832.4700
www.mtgengineers.com

PROJECT: UNIVERSITY PH IV
DATE: 2/28/14
DESIGNED BY
CHECKED BY
APPROVED BY

STORM DRAIN "C" PLAN AND PROFILE

PHASE IV UNIVERSITY

DEPART. OF ENGINEER & INFRASTRUCTURE
CITY OF TEXARKANA, TEXAS

DRAWING
SHEET 20
OF 50

X:\2011 Projects\116019 University Ave Phase 4, City of Texarkana, TX\05 Engineering Design\2014 Design\Design_07.pro
Wed Mar 12, 2014 1:19PM

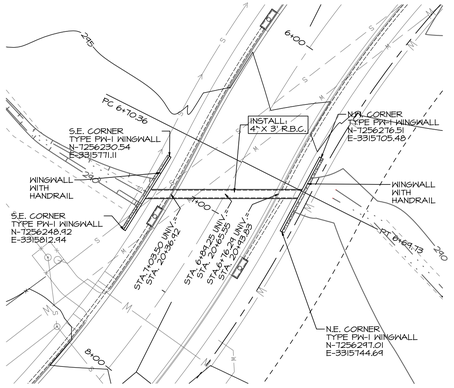

4' X 3' R.B.C.
PLAN VIEW

Scale: 1" = 40'

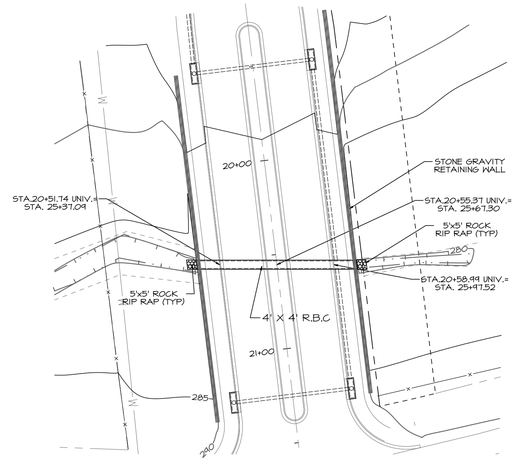

4' X 4' R.B.C.
PLAN VIEW

Scale: 1" = 40'

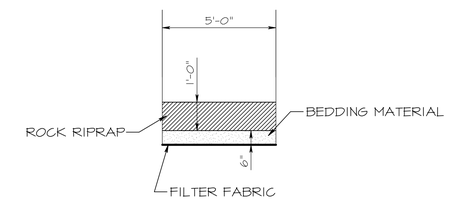

ROCK RIP RAP

N.T.S.

LEGEND

- RIGHT-OF-WAY / PROPERTY LINE
- EASEMENT LINE
- ROAD CENTER LINE
- OVERHEAD ELECTRIC LINE
- SEWER FORCE MAIN
- SEWER MAIN
- WATER MAIN
- SEWER MAIN (TO BE REMOVED)
- WATER MAIN (TO BE REMOVED)
- RETAINING WALL
- SILT FENCE
- ROCK FILTER DAM
- TOP OF BANK / SLOPE
- TOE OF SLOPE
- PROPOSED ELECTRIC CONDUIT
- PROPOSED CONTOUR
- GAS MAIN
- STORM DRAIN
- EXISTING SANITARY SEWER MANHOLE
- PROPOSED SANITARY SEWER MANHOLE
- POWER POLE
- PROPOSED LIGHT POLE

RIPRAP REQUIREMENTS

THE ROCK RIPRAP SHALL BE A DURABLE NATURAL STONE. THE WIDTH AND THICKNESS OF EACH STONE SHALL BE AT LEAST 1/3 OF THE LENGTH. BROKEN CONCRETE MAY BE USED FOR RIPRAP PROVIDED THAT GRADATIONS ARE MET AND ALL EXPOSED REINFORCEMENT IS CUT FLUSH WITH ALL SURFACES.

THE RIPRAP GRADATION REQUIREMENTS ARE AS FOLLOWS IN PERCENT OF TOTAL MASS SMALLER THAN THE PROVIDED MASS:
100% = 200 POUNDS
50% SIZE = 35 POUNDS
8% SIZE = 3 POUNDS

THE BEDDING MATERIAL GRADATION REQUIREMENTS ARE AS FOLLOWS:

SIEVE SIZE (SQUARE MESH)	% BY WEIGHT PASSING
3 INCH	100
1-1/2 INCH	50-80
3/4 INCH	20-60
NO. 4	0 -15
NO. 10	0-5

THE FILTER FABRIC SHALL MEET THE FOLLOWING REQUIREMENTS:
6 OZ./SQUARE YARD MINIMUM WEIGHT
0.5 LITERS/SECOND MINIMUM PERMITTIVITY
200 POUNDS MINIMUM TENSILE STRENGTH
80-120 APPARENT OPENING SIZE
20 - 100% ELONGATION AT YIELD
75 POUND MINIMUM TRAEZOIDAL TEAR STRENGHT

CONSTRUCTION

DRESS SLOPES AND PROTECTED AREAS TO THE LINE AND GRADE SHOWN ON THE PLANS BEFORE THE PLACEMENT OF RIPRAP. PLACE RIPRAP AND TOE WALLS ACCORDING TO THE DETAILS AND DIMENSIONS SHOWN ON THE PLANS OR AS DIRECTED. ALL EMBANKMENT PLACED SHALL BE COMPACTED TO A MINIMUM OF 95% DENSITY (STANDARD PROCTOR).

PLACE FILTER FABRIC WITH THE LENGTH RUNNING UP AND DOWN THE SLOPE. ENSURE FABRIC HAS A MINIMUM OVERLAP OF 2 FEET AT JOINTS. SECURE FABRIC WITH NAILS OR PINS. USE NAILS AT LEAST 2 INCHES LONG WITH WASHERS OR U-SHAPED PINS WITH LEGS AT LEAST 9 INCHES LONG. SPACE NAILS OR PINS AT A MAXIMUM SPACING OF 10 FEET IN EACH DIRECTION AND 5 FEET ALONG SEAMS. ALTERNATIVE ANCHORAGE AND SPACING MAY BE USED WHEN APPROVED.

PLACE STONE FOR RIPRAP ON THE BEDDING MATERIAL TO PRODUCE A REASONABLY WELL-GRADED MASS OF RIPRAP WITH THE MINIMUM PRACTICABLE PERCENTAGE OF VOIDS. AVOID DISPLACING THE BEDDING MATERIAL. ENSURE THAT THE ENTIRE MASS OF STONES IN THEIR FINAL POSITION IS FREE FROM OBJECTIONABLE POCKETS OF SMALL STONES AND CLUSTERS OF LARGER STONES. REARRANGE STONES BY MECHANICAL EQUIPMENT OR BY HAND IF NECESSARY TO OBTAIN A REASONABLY WELL-GRADED DISTRIBUTION OF STONE SIZES.

UPON COMPLETION OF RIPRAP PLACEMENT, ALL DISTURBED AREAS SHALL BE NEATLY GRADED AND REVEGETATED.

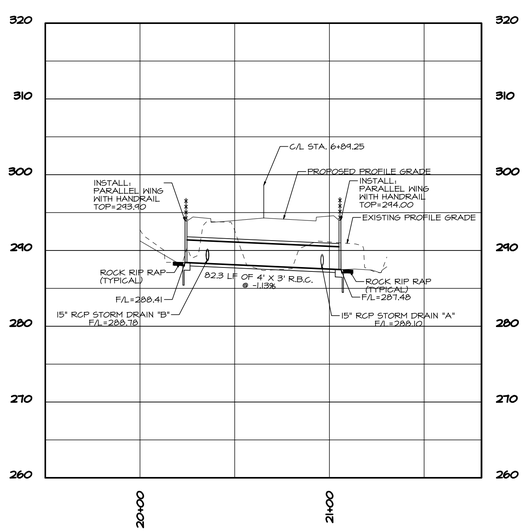

4' X 3' R.B.C.
PROFILE VIEW

Horizontal Scale: 1" = 40'
Vertical Scale: 1" = 10'

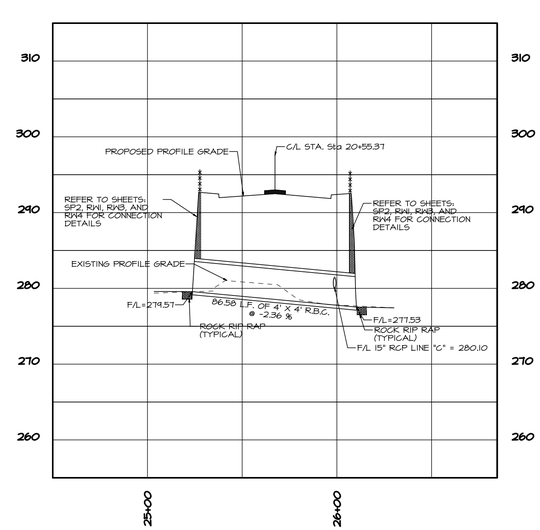

4' X 4' R.B.C.
PROFILE VIEW

Horizontal Scale: 1" = 40'
Vertical Scale: 1" = 10'

NOTE:

ADJUSTMENT TO CULVERT LENGTH MAY BE REQUIRED BASED ON RETAINING WALL DESIGN AND SHALL REQUIRE APPROVAL OF THE ENGINEER.

THE SEAL APPEARING ON THIS DOCUMENT WAS AUTHORIZED BY KAYLA R. WOOD, P.E. NO. 104859 ON 3/12/14. ALTERATION OF A SEALED DOCUMENT WITHOUT PRIOR NOTIFICATION TO THE RESPONSIBLE ENGINEER IS AN OFFENSE UNDER THE TEXAS ENGINEERING PRACTICE ACT.

STATE OF TEXAS
KAYLA R. WOOD
104859
REGISTERED
PROFESSIONAL ENGINEER

REVISIONS	DATE
1	
2	
3	
4	

MTG engineers & surveyors
TBPE FIRM F-10964
TBPLS FIRM 10194300
9480 SH-6 BRYAN RD., P.O. BOX 3166
BRYAN, TEXAS 77805-3166
P. 979.268.1933 F. 979.268.1700
www.mtgengineers.com

PROJECT: UNIVERSITY PH IV
DATE: 2/28/14
DESIGNED BY
CHECKED BY
APPROVED BY

PHASE IV UNIVERSITY

DEPART. OF ENGINEER & INFRASTRUCTURE
CITY OF TEXARKANA, TEXAS

4' X 3' R.B.C.& 4' X 4' R.B.C. PLAN AND PROFILE

DRAWING

SHEET 21 OF 50

X:\2011 Projects\116019 University Ave Phase 4, City of Texarkana, TX\05 Engineering Design\2014 Design\Design_07.pro
Wed Mar 12, 2014 1:44PM

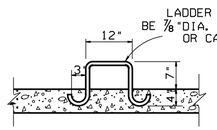

DETAIL OF LADDER RUNGS

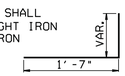

BARS F

BARS J

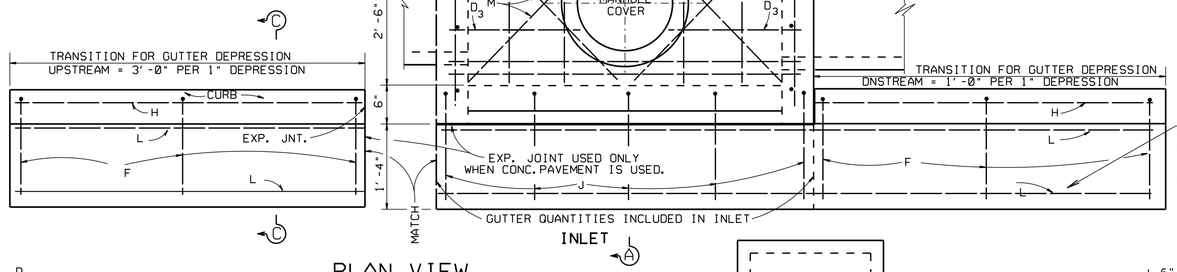

INLET

PLAN VIEW

NOTE:
WHEN AN INLET IS PLACED ADJACENT TO CONCRETE PAVEMENT, THE GUTTER DEPRESSION SHALL BE FORMED IN THE CONCRETE PAVEMENT. PAYMENT SHALL BE AS CONCRETE PAVEMENT.

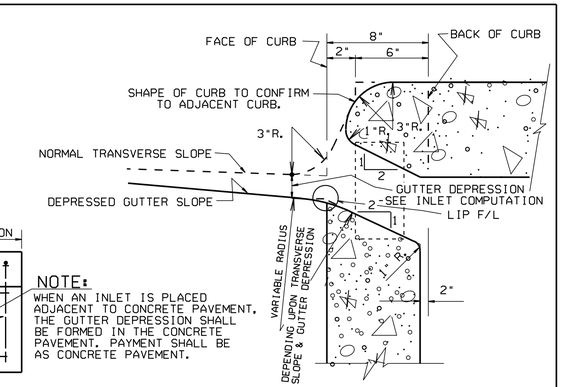

THROAT DETAIL

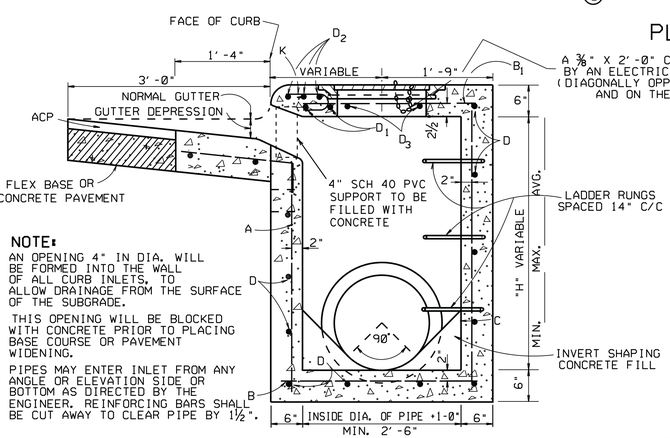

A ⅜" X 2'-0" CHAIN SHALL BE ATTACHED BY AN ELECTRIC ARC WELD ON THE COVER (DIAGONALY OPPOSITE THE DRILLED HOLE) AND ON THE FACE OF THE RING.

NOTE:
AN OPENING 4" IN DIA. WILL BE FORMED INTO THE WALL OF ALL CURB INLETS, TO ALLOW DRAINAGE FROM THE SURFACE OF THE SUBGRADE.

THIS OPENING WILL BE BLOCKED WITH CONCRETE PRIOR TO PLACING BASE COURSE OR PAVEMENT WIDENING.

PIPES MAY ENTER INLET FROM ANY ANGLE OR ELEVATION SIDE OR BOTTOM AS DIRECTED BY THE ENGINEER. REINFORCING BARS SHALL BE CUT AWAY TO CLEAR PIPE BY 1½".

SECTION A-A

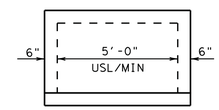

TY I INLET

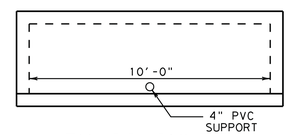

TY II INLET

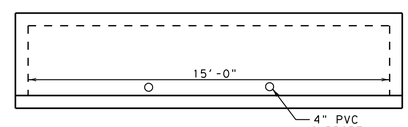

TY III INLET

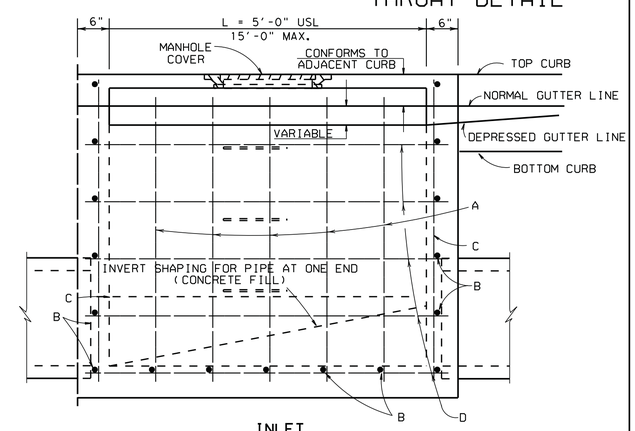

INLET

GENERAL NOTES

ALL CONCRETE SHALL BE CLASS "A". ALL EXPOSED CORNERS SHALL BE CHAMFERED ¾".
STEPS LOCATED AS DIRECTED SHALL BE PROVIDED AND INSTALLED IN ALL INLETS WHERE "H" IS 5'-0" OR OVER.
LADDER RUNGS SHALL BE SUBSIDIARY OF "INLET COMPLETE".
PAYMENT OF CURB INLETS WILL BE MADE AT THE UNIT PRICE BID FOR "INLETS COMPLETE".
PAYMENT OF EXTENSIONS TO INLETS WILL BE MADE AT THE UNIT PRICE BID FOR "INLET EXTENSIONS".
PAYMENT FOR CURB TRANSITION FOR GUTTER DEPRESSION WILL BE PAID FOR UNDER PERTINENT BID ITEMS.
INLETS AND EXTENSIONS ON CURVED SECTIONS SHALL CONFORM TO THE CURVATURE OF THE CURVE.
EXPANSION JOINT MATERIAL SHALL BE ¾" PREFORMED FIBER.
PAYMENT FOR ⅜"X1'-0" CHAIN ATTACHED TO RING AND COVER TO BE PROVIDED AND INSTALLED SUBSIDIARY TO RING AND COVER.
PIPES MAY ENTER BOX FROM ANY ANGLE OR ELEVATION AS SHOWN ON THE PLANS OR AS DIRECTED BY THE ENGINEER.
REINFORCING BARS SHALL BE BENT OR ADJUSTED TO CLEAR PIPE BY 1½".

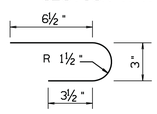

BARS K

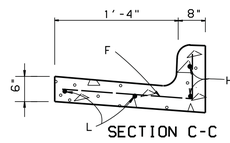

SECTION C-C

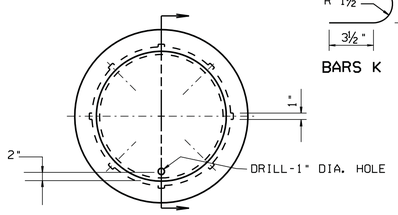

PLAN

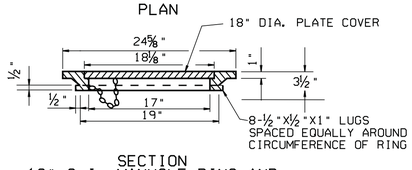

SECTION
18" C.I. MANHOLE RING AND STEEL PLATE COVER

REINFORCING STEEL

ONE 5' INLET

BAR	NO.	SIZE	SPACING	LENGTH
A	5	4	11"	
B		4	11"	
B_1	4	4	11"	
C		4	11"	
D		4	11"	5'-8"
D_1	2 MIN.	4☆	3"	5'-8"
D_2	3	4		5'-8"
D_3	4 MIN.	4	11"	2'-0"
H	4	4		
J	5	4	17"	2'-4"
K	13	4	6"	1'-3¼"
L	2	4	12"	6'-0"
M	4	4		

☆FOR OPENINGS GREATER THAN 5'0", BARS D_1 SHALL BE #6

**ESTIMATED QUANTITIES FOR L=5'

REGULAR INLET WIDTH FT.	H=3'-0" CL. "A" CONC. C.Y.	H=3'-0" REINF. STEEL LB.	PER ADD'L FT.-"H" CL. "A" CONC. C.Y.	PER ADD'L FT.-"H" REINF. STEEL LB.
2'-6"	1.91	183	.315	30.22
2'-9"	2.00	188	.324	35.34
3'-0"	2.08	193	.333	40.46
3'-3"	2.17	198	.343	49.37
3'-6"	2.25	203	.352	54.49
3'-9"	2.34	209	.361	63.39
4'-0"	2.43	214	.370	68.51
4'-3"	2.51	219	.380	73.63
4'-6"	2.60	224	.389	78.75
5'-0"	2.77	234	.398	92.78

DEDUCT FROM QUANTITY COMPUTED ABOVE FOR EACH PIPE ENTERING INLET

DIA. PIPE IN.	CL. "A" CONC. C.Y.	REINF. STEEL LB.	DIA. PIPE IN.	CL. "A" CONC. C.Y.	REINF. STEEL LB.
15	0.035	2.09	33	0.151	6.47
18	0.049	2.45	36	0.178	7.01
21	0.065	2.84	42	0.242	8.18
24	0.086	3.25	48	0.316	12.47
27	0.105	3.59			
30	0.127	3.95			

**QUANTITIES ARE APPROXIMATE AND ARE SHOWN FOR BIDDERS INFORMATION ONLY.

Texas Department of Transportation
©1999 ATLANTA DISTRICT STANDARD

CURB INLET DETAILS

TYPE I, II & III

FILE: cbinltdt.std	DN:	CK:	DW:	CK:	NEG:
ORIG DATE:	DIST	FED REG	FEDERAL AID PROJECT #		SHEET
REVISIONS 04-99 ADDED TY II & TY III	ATL	6			
	COUNTY		CONTROL	SECT	JOB	HIGHWAY

DISCLAIMER
The use of this standard is governed by the "Texas Engineering Practice Act". No warranty of any kind is made by TxDOT for any purpose whatsoever. TxDOT assumes no responsibility for the conversion of this standard to other formats or for incorrect results or damages resulting from its use.

USERNAME:
FILE:
REF-FILE:
REF-FILE:
DATE:

LEVELS DISPLAYED
1 2 3 4 5 6 7 8 9 10 11 12 13 14 15 16
17 18 19 20 21 22 23 24 25 26 27 28 29 30 31 32
33 34 35 36 37 38 39 40 41 42 43 44 45 46 47 48
49 50 51 52 53 54 55 56 57 58 59 60 61 62 63

REVISIONS
DATE
1
2
3
4

MTG engineers & surveyors
TBPE FIRM F-1094
TBPLS FIRM 10194600
9480 SH-6 BRYAN, P.O. BOX 3166
BRYAN, TEXAS 77805-3166
P 409.268.4093 F 409.268.4700
www.mtgengineers.com

UNIVERSITY PH IV 2/28/14
PROJECT
DATE
DESIGNED BY
CHECKED BY
DRAWN BY
APPROVED BY

CURB INLET DETAILS

PHASE IV UNIVERSITY
DEPART. OF ENGINEER & INFRASTRUCTURE
CITY OF TEXARKANA, TEXAS

DRAWING
SHEET 22 OF 50

X:\2011 Projects\116019 University Ave Phase 4, City of Texarkana, TX\05 Engineering Design\2014 Design\Design_07.pro
Thu Mar 6, 2014 8:55AM

BOX DATA

SECTION DIMENSIONS S (ft)	H (ft)	T_T (in)	T_B (in)	T_S (in)	Fill Height (ft)	M (Min) (in)	REINFORCING (in²/ft) ② A_{S1}	A_{S2}	A_{S3}	A_{S4}	A_{S5}	A_{S6}	A_{S7}	A_{S8}	① Lift Weight (Tons)
4	2	7.5	6	5	<2	-	0.18	0.27	0.15	0.12	0.18	0.18	0.18	0.14	4.5
4	2	5	5	5	2<3	38	0.18	0.19	0.17	0.12	-	-	-	-	3.6
4	2	5	5	5	3-5	38	0.13	0.13	0.13	0.12	-	-	-	-	3.6
4	2	5	5	5	10	38	0.12	0.12	0.12	0.12	-	-	-	-	3.6
4	2	5	5	5	15	38	0.14	0.16	0.16	0.12	-	-	-	-	3.6
4	2	5	5	5	20	38	0.18	0.20	0.21	0.12	-	-	-	-	3.6
4	2	5	5	5	25	38	0.23	0.25	0.25	0.12	-	-	-	-	3.6
4	2	5	5	5	30	38	0.28	0.30	0.30	0.12	-	-	-	-	3.6
4	3	7.5	6	5	<2	-	0.18	0.31	0.18	0.12	0.18	0.18	0.18	0.14	5.0
4	3	5	5	5	2<3	38	0.15	0.23	0.20	0.12	-	-	-	-	4.1
4	3	5	5	5	3-5	38	0.12	0.16	0.16	0.12	-	-	-	-	4.1
4	3	5	5	5	10	38	0.12	0.14	0.14	0.12	-	-	-	-	4.1
4	3	5	5	5	15	38	0.12	0.18	0.18	0.12	-	-	-	-	4.1
4	3	5	5	5	20	38	0.14	0.23	0.24	0.12	-	-	-	-	4.1
4	3	5	5	5	25	38	0.17	0.29	0.29	0.12	-	-	-	-	4.1
4	3	5	5	5	30	38	0.21	0.35	0.35	0.12	-	-	-	-	4.1
4	4	7.5	6	5	<2	-	0.18	0.33	0.20	0.12	0.18	0.18	0.18	0.14	5.5
4	4	5	5	5	2<3	38	0.12	0.26	0.23	0.12	-	-	-	-	4.6
4	4	5	5	5	3-5	38	0.12	0.18	0.18	0.12	-	-	-	-	4.6
4	4	5	5	5	10	38	0.12	0.15	0.15	0.12	-	-	-	-	4.6
4	4	5	5	5	15	38	0.12	0.19	0.20	0.12	-	-	-	-	4.6
4	4	5	5	5	20	38	0.12	0.25	0.25	0.12	-	-	-	-	4.6
4	4	5	5	5	25	38	0.14	0.31	0.31	0.12	-	-	-	-	4.6
4	4	5	5	5	30	38	0.17	0.37	0.37	0.12	-	-	-	-	4.6

① For Box Length = 8'-0"

② A_{S1} thru A_{S4}, A_{S7} and A_{S8} are minimum required areas of reinforcement per linear foot of box length. A_{S6} and A_{S5} are minimum required areas of reinforcement per linear foot of box width.

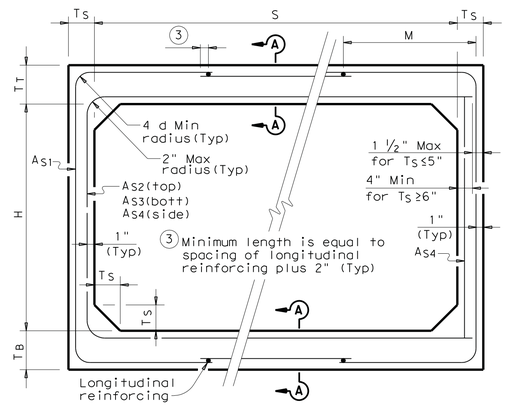

CORNER OPTION "A" CORNER OPTION "B"

FILL HEIGHT 2 FT AND GREATER

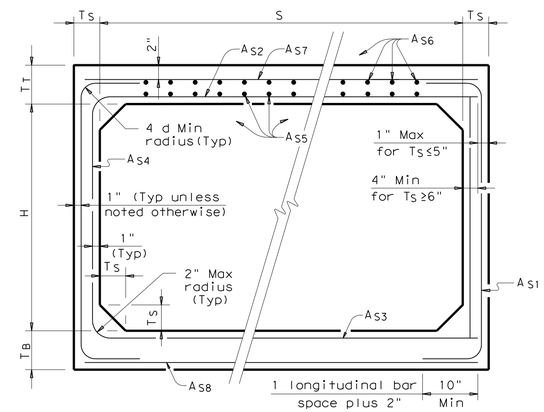

CORNER OPTION "A" CORNER OPTION "B"

FILL HEIGHT LESS THAN 2 FT

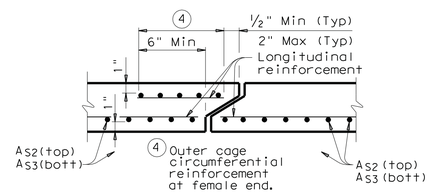

SECTION A-A

(TOP AND BOTTOM SLAB JOINT REINFORCEMENT)

GENERAL NOTES:

Designs shown conform to ASTM C1577.
Refer to ASTM C1577 for information or details not shown.
All concrete shall be Class "H" Concrete with a minimum compressive strength of 5,000 psi.
See SCP-MD standard sheet for miscellaneous details and notes not shown.
In lieu of furnishing the designs shown on this sheet, the contractor may furnish an alternate design that is equal to or exceeds the box design for the design fill height in the table. Shop plans for alternate designs shall be submitted in accordance with Item "Precast Concrete Structures".

HL93 LOADING

Texas Department of Transportation
Bridge Division

SINGLE BOX CULVERTS PRECAST
4'-0" SPAN

SCP-4

FILE: scp04ste.dgn	DN: GAF	CK: LMW	DW: BWH/TxDOT	CK: GAF
©TxDOT February 2010	DISTRICT	FEDERAL AID PROJECT		SHEET
REVISIONS				
	COUNTY		CONTROL SECT JOB	HIGHWAY

DISCLAIMER:
The use of this standard is governed by the "Texas Engineering Practice Act". No warranty of any kind is made by TxDOT for any purpose whatsoever. TxDOT assumes no responsibility for the conversion of this standard to other formats or for incorrect results or damages resulting from its use.

LEVELS DISPLAYED
ACC:

REVISIONS
1
2
3
4
DATE

MTG engineers & surveyors
TBPE FIRM F-3199
TBPLS FIRM 10194300
9480 SH-6 BRYAN HILL RD., P.O. BOX 3166
BRYAN, TEXAS 77805-3166
P: 979.268.4333 F: 979.268.4700
www.mtgengineers.com

PROJECT UNIVERSITY PH IV
DATE 2/28/14
DESIGNED BY
CHECKED BY
APPROVED BY

4' SPAN BOX CULVERT DETAILS

PHASE IV UNIVERSITY
DEPART. OF ENGINEER & INFRASTRUCTURE
CITY OF TEXARKANA, TEXAS

DRAWING
SHEET 23
OF 50

X:\2011 Projects\116019 University Ave Phase 4, City of Texarkana, TX\05 Engineering Design\2014 Design\Design_07.pro
Thu Mar 6, 2014 8:55AM

DISCLAIMER:
The use of this standard is governed by the "Texas Engineering Practice Act". No warranty of any kind is made by TxDOT for any purpose whatsoever. TxDOT assumes no responsibility for the conversion of this standard to other formats or for incorrect results or damages resulting from its use.

TABLE OF DIMENSIONS & REINFORCING STEEL
(Wings for One Structure End)

Dimensions					Variable Reinforcing				Estimated Quantities (4) per ft of wing (2~Wings)		Estimated Quantities per ft of Toewall (1~Toewall)	
Maximum Wingwall Height Hw	W	X	Y	Z	Bars J1 Size	Bars J1 Spa	Bars J2 Size	Bars J2 Spa	Reinf (Lb/Ft)	Conc (CY/Ft)	Reinf (Lb/Ft)	Conc (CY/Ft)
2′-6"	2′-10"	10"	1′- 0"	7"	#4	1′-0"	#4	1′-0"	48.64	0.406	6.85	0.071
2′-9"	2′-10"	10"	1′- 0"	7"	#4	1′-0"	#4	1′-0"	49.31	0.424	6.85	0.071
3′-0"	2′-10"	10"	1′- 0"	7"	#4	1′-0"	#4	1′-0"	49.98	0.444	6.85	0.071
3′-3"	2′-10"	10"	1′- 0"	7"	#4	1′-0"	#4	1′-0"	53.32	0.462	6.85	0.071
3′-6"	2′-10"	10"	1′- 0"	7"	#4	1′-0"	#4	1′-0"	53.98	0.480	6.85	0.071
4′-0"	3′- 2"	1′- 2"	1′- 0"	7"	#4	1′-0"	#4	1′-0"	55.77	0.532	6.85	0.071
4′-6"	3′- 2"	1′- 2"	1′- 0"	7"	#4	1′-0"	#4	1′-0"	59.77	0.568	6.85	0.071
5′-0"	3′- 9"	1′- 7"	1′- 2"	7"	#4	1′-0"	#4	1′-0"	63.45	0.632	6.96	0.075
5′-6"	3′- 9"	1′- 7"	1′- 2"	7"	#4	1′-0"	#4	1′-0"	67.46	0.668	6.96	0.075
6′-0"	4′- 4"	2′- 0"	1′- 4"	7"	#5	1′-0"	#5	1′-0"	80.67	0.730	7.07	0.078
6′-6"	4′- 4"	2′- 0"	1′- 4"	7"	#5	1′-0"	#5	1′-0"	85.05	0.768	7.07	0.078
7′-0"	5′- 0"	2′- 3"	1′- 9"	8"	#5	1′-0"	#5	1′-0"	92.15	0.864	8.07	0.093
7′-6"	5′- 0"	2′- 3"	1′- 9"	8"	#5	1′-0"	#5	1′-0"	96.54	0.902	8.07	0.093
8′-0"	5′- 6"	2′- 8"	1′-10"	8"	#5	6"	#5	6"	139.04	0.962	8.13	0.095
8′-6"	5′- 6"	2′- 8"	1′-10"	8"	#5	6"	#5	6"	144.47	1.000	8.13	0.095
9′-6"	6′- 0"	2′-10"	2′- 2"	9"	#5	6"	#5	6"	156.93	1.136	8.41	0.110
10′-6"	6′- 5"	3′- 0"	2′- 5"	9"	#6	6"	#5	6"	196.27	1.234	8.57	0.117
11′-6"	7′- 2"	3′- 6"	2′- 8"	11"	#6	6"	#6	6"	230.13	1.438	9.52	0.140
12′-6"	7′- 8"	3′- 9"	2′-11"	1′- 0"	#7	6"	#6	6"	283.41	1.592	9.74	0.157
13′-6"	8′- 2"	4′- 0"	3′- 2"	1′- 2"	#8	6"	#6	6"	348.72	1.804	10.02	0.186
14′-6"	8′-10"	4′- 5"	3′- 5"	1′- 4"	#9	6"	#6	6"	432.94	2.046	10.30	0.218
15′-6"	9′- 6"	4′-10"	3′- 8"	1′- 6"	#9	6"	#7	6"	489.52	2.302	11.24	0.253
16′-0"	9′-11"	5′- 0"	3′-11"	1′- 7"	#9	6"	#7	6"	505.72	2.448	11.47	0.279

TABLE OF WINGWALL REINFORCING (2~Wings)

Bar	Size	No.	Spa
D1	#6	~	1′-0"
D2	#6	~	1′-0"
E1	#4	~	1′-0"
F	#4	~	1′-0"
G	#6	~	8"
M1	#4	4	~
P	#4	~	1′-0"
V	#4	~	1′-0"

TABLE OF TOEWALL REINFORCING

Bar	Size	No	Spa
J3	#4	~	1′-0"
M2	#4	2	~
E2	#4	~	1′-0"

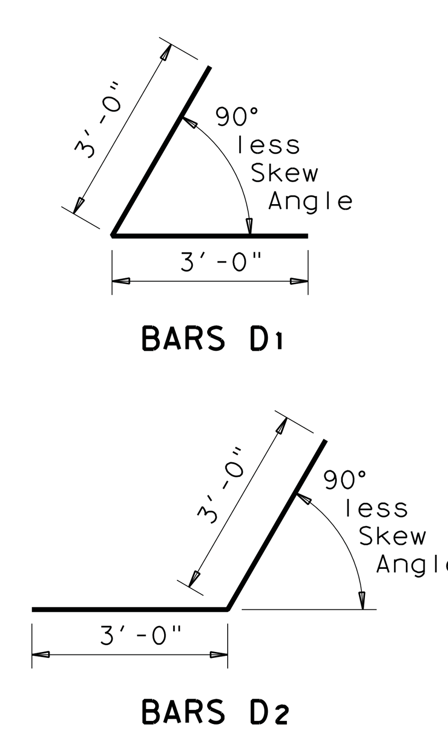

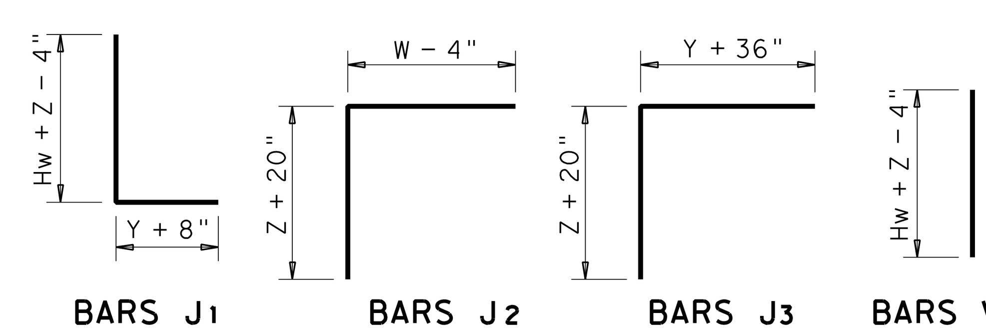

WING DIMENSION CALCULATIONS:

Formulas: (All values are in Feet)

Hw = H + T + C
Lw = (Hw) (SL) ÷ Cosine θ for Ty PW-1
= (Hw - 1′) (SL) ÷ Cosine θ for Ty PW-2 and Hw ≥ 4′
= (Hw - 0.5′) (SL) ÷ Cosine θ for Ty PW-2 and Hw < 4′

For Cast-in-place culverts:
Ltw = [(N) (S) + (N + 1) (U)] ÷ Cosine θ

For Precast culverts:
Ltw = [(N) (2 U + S) + (N - 1) (0.5′)] ÷ Cosine θ
Total Wingwall Area (Two Wings ~ SF)
= (2)(Hw)(Lw) for Ty PW-1
= (2)(Hw)(Lw) - 6 SF for Ty PW-2 and Hw ≥ 4′
= (2)(Hw)(Lw) - 1.5 SF for Ty PW-2 and Hw < 4′

Hw = Height of Wingwall
Lw = Length of Wingwall
Ltw = Culvert Toewall Length
N = Number of Culvert Spans
SL:1 = Channel Slope ratio. (Horizontal: 1 Vertical, Usual value is 2:1)
θ = Culvert Skew

See applicable box culvert standard for S, H, T and U values.

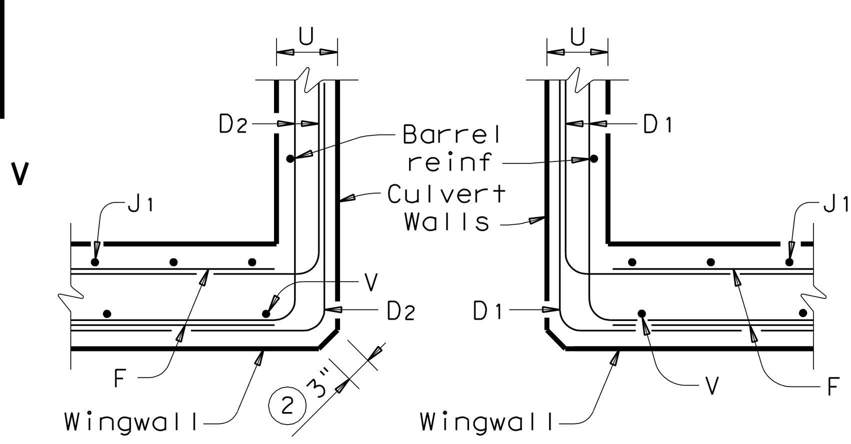

SECTION C-C

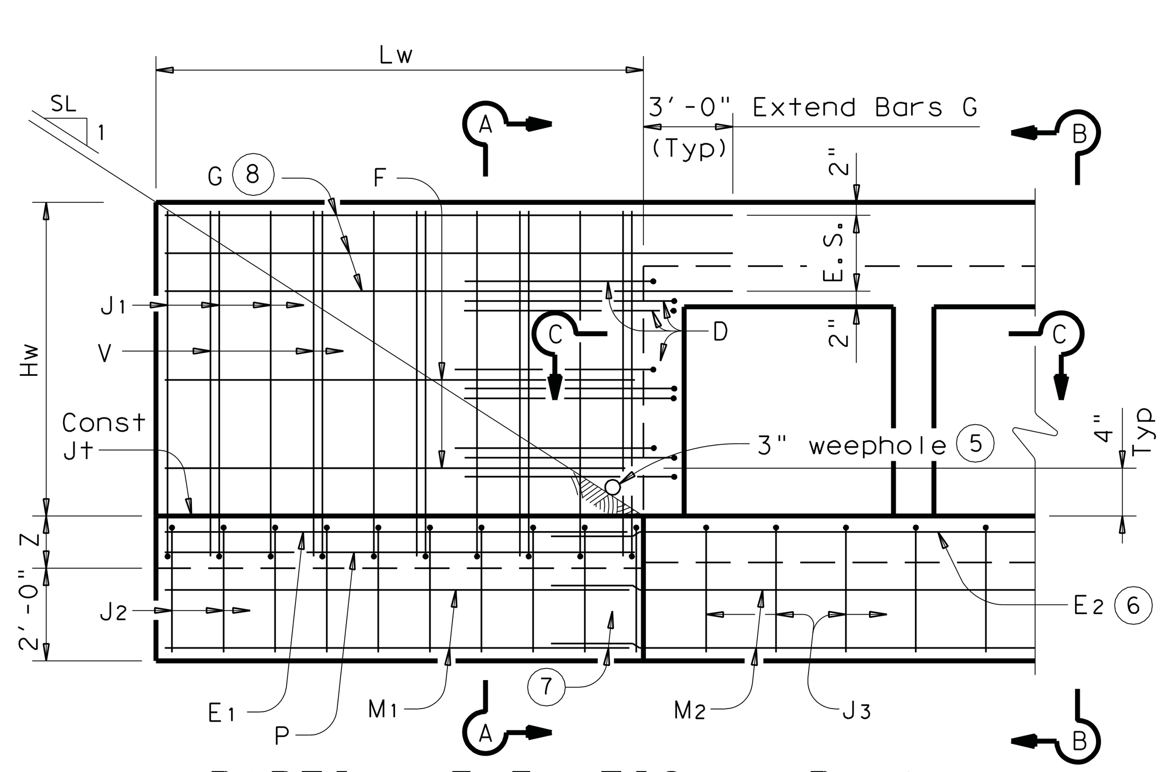

PARTIAL ELEVATION - PW-1

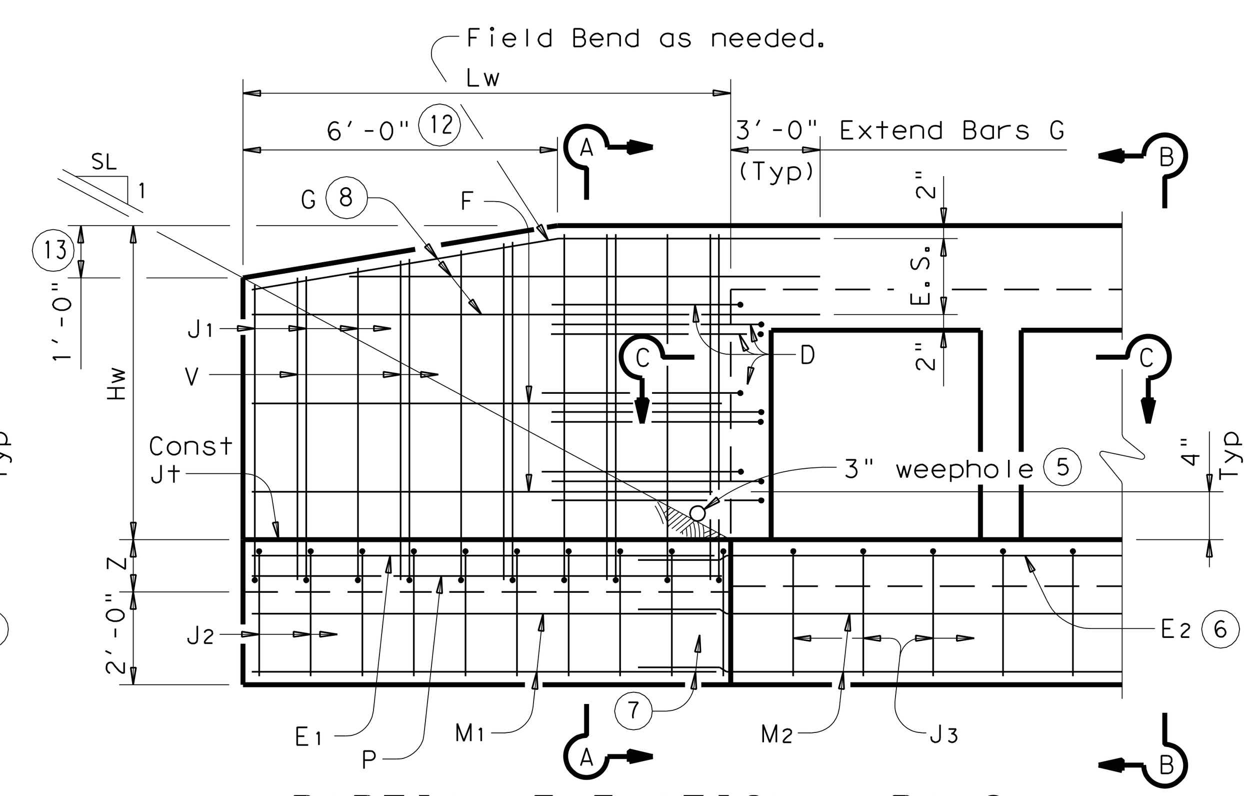

PARTIAL ELEVATION - PW-2

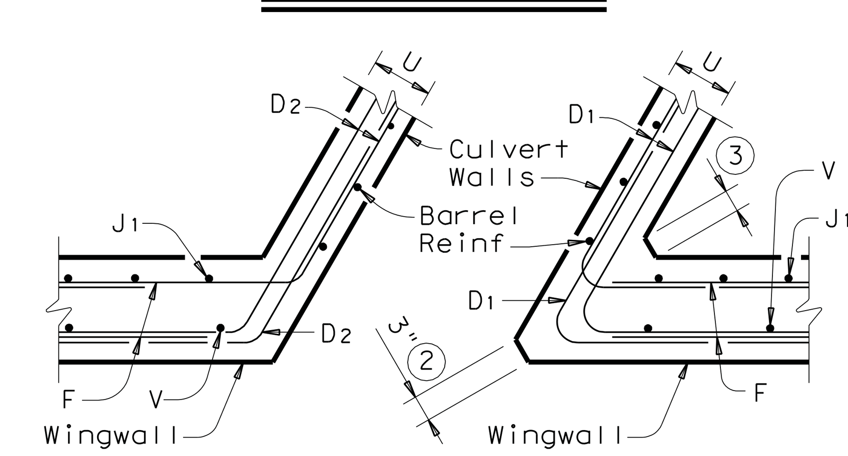

SECTION C-C

1. Skew Angle = 0°
2. At discharge end, chamfer may be ¾".
3. For 15° Skew ~ 1"
For 30° Skew ~ 2"
For 45° Skew ~ 3"
4. Quantities shown are for two Type PW-1 wings. Adjust concrete volume for Type PW-2 wings. To determine estimated quantities for two wings, multiply the tabulated values by Lw. Quantities shown do not include weight of Bars D.
5. Provide weepholes for Hw = 5′-0" and greater. Fill around weepholes with coarse gravel.
6. Extend Bars E2 1′-6" minimum into the wingwall footing.
7. Lap Bars M1 1′-6" minimum with Bars M2.
8. Bars G equally spaced at 8" maximum, place as shown. Provide at least two pair Bars G per wing.
9. 0" min to 5′-0" max. Estimated curb heights are shown elsewhere in the plans. For structures with pedestrian rail, bicycle rail or curbs taller than 1′-0", refer to ECD standard. For structures with T6 bridge rail, refer to T6-CM standard. For structures with traffic rail, other than T6, refer to RAC standard.
10. For vehicle safety, the following requirements must be met:
 - For structures without bridge rail, curbs cannot project more than 3" above finished grade.
 - For structures with bridge rail, build curbs flush with finished grade.
 Reduce curb heights, if necessary, to meet the above requirements. No changes will be made in quantities and no additional compensation will be allowed for this work.
11. 1′-0" typical. 2′-0" typical when RAC standard is referenced elsewhere in the plans.
12. 3′-0" for Hw < 4′.
13. 6" for Hw < 4′.

GENERAL NOTES:
Designed in accordance with AASHTO LRFD Bridge Design Specifications.
Provide Class "C" Concrete (f′c = 3,600 psi Min) and Grade 60 reinforcing steel.
Provide 1 ¼" Min clear cover to reinforcing steel.
Depth of toewalls for wingwalls and culverts may be reduced or eliminated when founded on solid rock, when directed by the Engineer.
See BCS sheet for wingwall type and additional dimensions and information.
The quantities for concrete and reinforcing steel resulting from the formulas given on this sheet are for the Contractor′s information only.

DESIGNER NOTES:
Type PW-1 can be used for all applications and must be used if railing is to be mounted to the wingwall.
Type PW-2 can only be used for applications without a railing mounted to the wingwall.

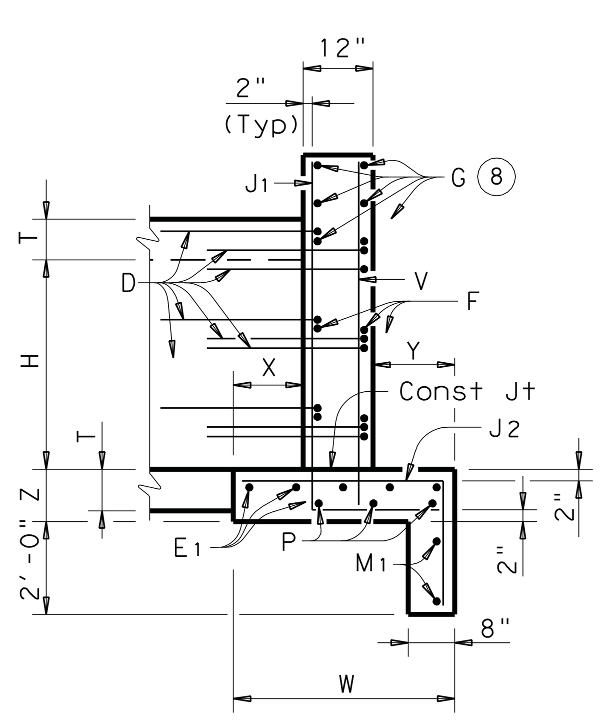

SECTION A-A
(Showing Wing Reinf)

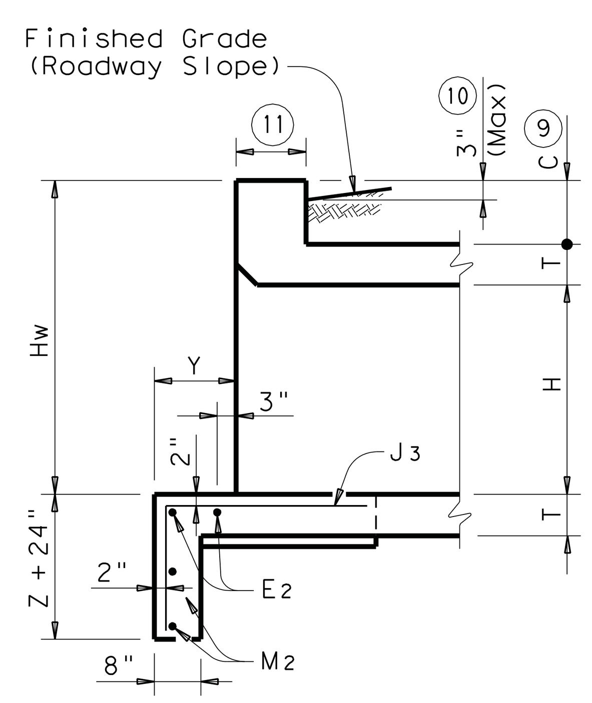

SECTION B-B
(Showing Wing Reinf)

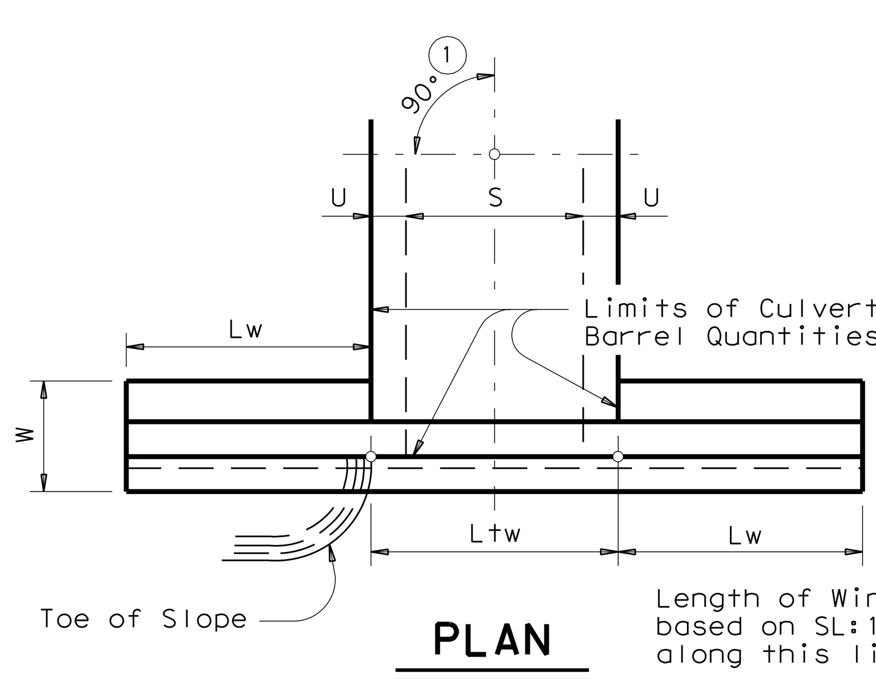

PLAN

DETAILS FOR NON-SKEWED BOX CULVERTS

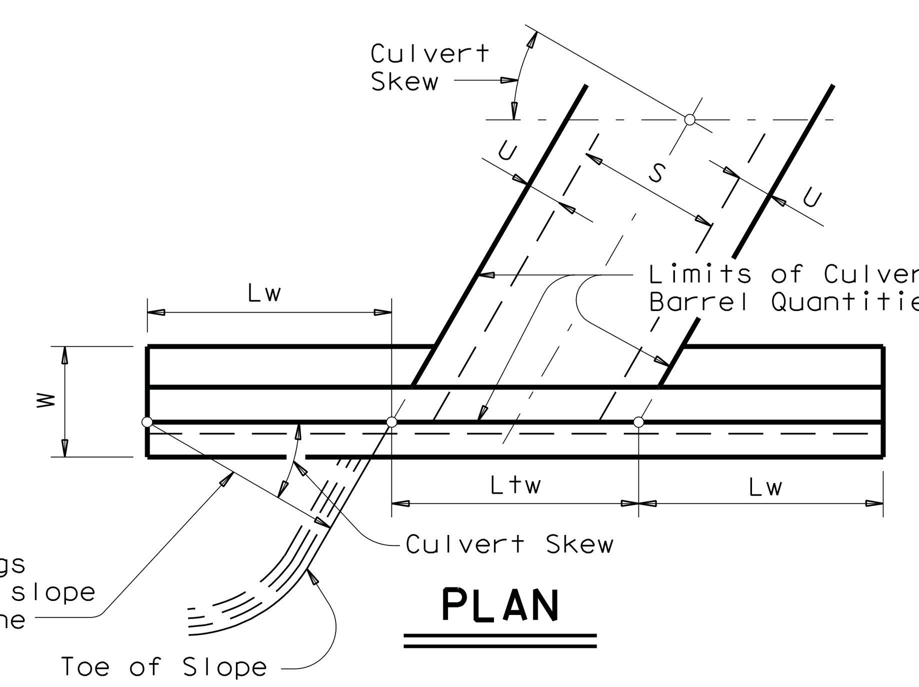

PLAN

DETAILS FOR SKEWED BOX CULVERTS
(Showing 30° Skew)

Texas Department of Transportation
Bridge Division

CONCRETE WINGWALLS WITH PARALLEL WINGS FOR BOX CULVERTS TYPES PW-1 AND PW-2

PW

FILE: pwstde01.dgn	DN: GAF	CK: CAT	DW: TxDOT	CK: GAF
©TxDOT February 2010	DISTRICT	FEDERAL AID PROJECT		SHEET
REVISIONS 11-10: Reinforcing Quantities. 01-12: PW-1 & PW-2.	COUNTY	CONTROL	SECT	JOB / HIGHWAY

REVISIONS | DATE
1
2
3
4

MTG engineers & surveyors
TBPE FIRM NO. F-354
5930 SUMMERHILL RD. | P.O. BOX 3786
TEXARKANA TEXAS 75501
P 903.838.8533 | F 903.832.4700
www.mtgengineers.com

PROJECT UNIVERSITY PH IV
DATE 2/28/14
DESIGNED BY
CHECKED BY
APPROVED BY

CONCRETE WINGWALL DETAILS

PHASE IV UNIVERSITY
DEPART. OF ENGINEER & INFRASTRUCTURE
CITY OF TEXARKANA, TEXAS

DRAWING
SHEET 24 OF 50

ACC:
LEVELS DISPLAYED
1

X:\2011 Projects\116019 University Ave Phase 4, City of Texarkana, TX\05 Engineering Design\2014 Design\Design_07.pro
Thu Mar 6, 2014 8:56AM

GENERAL NOTES:

1. LOCATE ALL EXISTING SERVICES BEFORE CONSTRUCTION BEGINS TO KNOW WHERE AND AT WHAT ELEVATION TO INSTALL PROPOSED SERVICES.

2. ALL WATER SERVICES THAT CROSS UNDER THE EXISTING PAVEMENT SHALL BE BORED. BORE LENGTH SHALL EXTEND FROM THE MAIN, UNDER THE EXISTING PAVEMENT, TO 10' BEYOND THE PROPOSED BACK OF CURB.

3. ALL PROP WATER MAINS THAT CROSS THE EXISTING PAVEMENT SHALL BE DIP AND BORED

4. ALL ABANDONED UTILITIES ARE TO BE REMOVED IF THEY ARE WITHIN 1' OF FINISHED SUBGRADE ELEVATION AND WITHIN 1' OF THE PROPOSED BACK OF CURB. IF NOT, THEY MAY BE CUT AND PLUGGED WITH CONCRETE. PAYMENT IS SUBSIDIARY TO PREP ROW.

5. SPECIFICATIONS FOR WATER AND SEWER SHALL BE PICKED UP AT TEXARKANA WATER UTILITIES OFFICE AT 801 WOOD STREET, TEXARKANA, TEXAS.

6. All WATER PIPE SHALL BE PVC C-900 (CLASS 235, DR-15) OR DUCTILE IRON PIPE AND ALL FITTINGS SHALL BE DUCTILE IRON PIPE AND SHALL BE LOCKED ON WITH MECHANICAL JOINT RESTRAINTS WITH THE REQUIRED THRUST BLOCKING.

7. WATER PIPE SHALL HAVE MINIMUM COVER OF 48". IN CUT SECTIONS, THE PIPE SHALL BE 48" BELOW TOP OF CURB. IN FILL SECTIONS, PIPE SHALL BE 48" BELOW FINISH GRADE OF SLOPE. IN DITCH/SWALE SECTION, PIPE SHALL BE 48" BELOW FLOWLINE OF DITCH/SWALE. FORCE MAIN PIPE SHALL BE 36" BELOW FINISH GRADE. THE WATER AND SEWER MUST BE PLACED AT A DEPTH SO WHEN THE BANK IS CUT DOWN FOR FUTURE DRIVEWAYS THE MINIMUM COVER WILL BE MAINTAINED. IT IS THE CONTRACTORS RESPONSIBILITY TO ENSURE THIS MINIMUM COVER WILL BE MAINTAINED.

8. WATER LINES AND FITTINGS (TAPPING SLEEVES) SHALL BE HYDROSTATICALLY TESTED.

9. ALL FIRE HYDRANTS SHALL BE TESTED AND PAINTED TO MEET FIRE FLOW COLOR CODE AS PER TEXARKANA WATER UTILITIES STANDARDS. THE BARRELS OF THE HYDRANTS SHALL BE PAINTED "SAFETY YELLOW" AND THE CAPS AND BONNET SHALL BE PAINTED ACCORDING TO THE RESULTS OF THE FLOW TEST. RED - 0 TO 499 GPM, ORANGE - 500 TO 999 GPM, AND GREEN - > 1000 GPM.

10. PLACE #10 GAUGE SOLID TRACER WIRE AND LOCATOR TAPE WITH THE WATER PIPE. THE TRACER WIRE SHALL BE ATTACHED TO THE TOP OF THE PIPE AND BE CONTINUOUS BETWEEN TRACER WIRE AND TEST STATIONS AND SECURED TO TEST STATION. THE TEST STATIONS SHALL BE AS MANFACTURED BY SNAKE PIT OR AN APPROVED EQUAL AND LOCATED ADJACENT TO ALL FIRE HYDRANTS AND AT ALL WATER MAIN INTERSECTIONS. THE TEST STATIONS SHALL BE INSTALLED IN A 2' X 2' X 6" CONCRETE PAD. THE LOCATOR TAPE SHALL BE PLACED 24" BELOW FINISHED GRADE. THE CONTRACTOR WILL BE REQUIRED TO DEMONSTRATE TO THE UTILITY, THE ABILITY TO CONNECT THE TRACER WIRE INSTALLED ON THE WATER MAIN, PRIOR TO ACCEPTANCE OF THE PROPOSED IMPROVEMENTS.

11. PLACE THE NECESSARY FITTINGS REQUIRED TO ENSURE THAT THE WATER LINES PLACED IN A RADIUS MEET MINIMUM PVC STANDARDS.

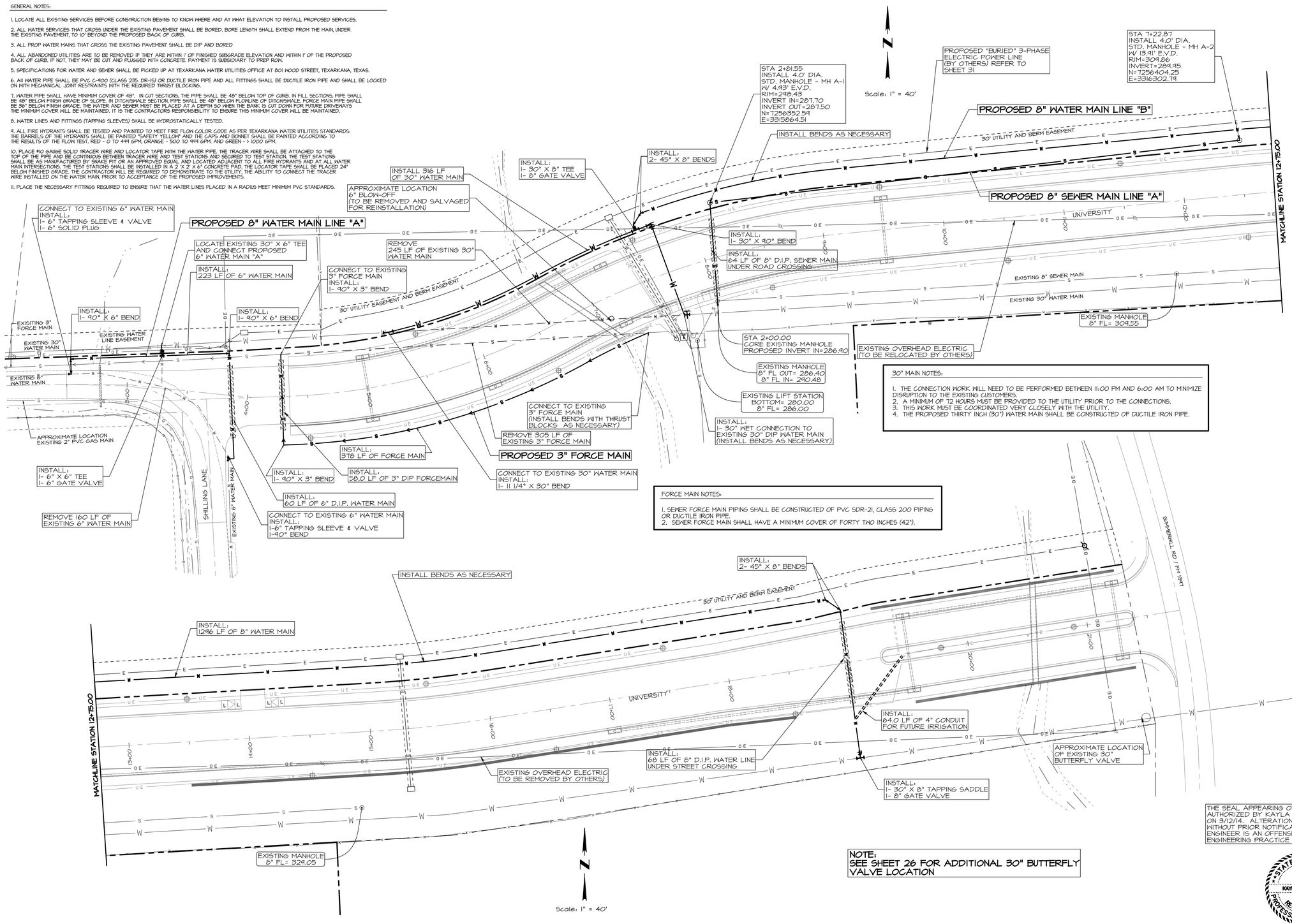

30" MAIN NOTES:

1. THE CONNECTION WORK WILL NEED TO BE PERFORMED BETWEEN 11:00 PM AND 6:00 AM TO MINIMIZE DISRUPTION TO THE EXISTING CUSTOMERS.
2. A MINIMUM OF 72 HOURS MUST BE PROVIDED TO THE UTILITY PRIOR TO THE CONNECTIONS.
3. THIS WORK MUST BE COORDINATED VERY CLOSELY WITH THE UTILITY.
4. THE PROPOSED THIRTY INCH (30") WATER MAIN SHALL BE CONSTRUCTED OF DUCTILE IRON PIPE.

FORCE MAIN NOTES:

1. SEWER FORCE MAIN PIPING SHALL BE CONSTRUCTED OF PVC SDR-21, CLASS 200 PIPING OR DUCTILE IRON PIPE.
2. SEWER FORCE MAIN SHALL HAVE A MINIMUM COVER OF FORTY TWO INCHES (42").

NOTE:
SEE SHEET 26 FOR ADDITIONAL 30" BUTTERFLY VALVE LOCATION

THE SEAL APPEARING ON THIS DOCUMENT WAS AUTHORIZED BY KAYLA R. WOOD, P.E. NO. 104859 ON 3/12/14. ALTERATION OF A SEALED DOCUMENT WITHOUT PRIOR NOTIFICATION TO THE RESPONSIBLE ENGINEER IS AN OFFENSE UNDER THE TEXAS ENGINEERING PRACTICE ACT.

STATE OF TEXAS
KAYLA R. WOOD
104859
REGISTERED PROFESSIONAL ENGINEER

REVISIONS	DATE
1	
2	
3	
4	

MTG engineers & surveyors
TBPE FIRM F-10164 TBPLS FIRM 10194600
9480 SUMMERHILL RD., P.O. BOX 3166 TEXARKANA, TEXAS 75504
P: 903.838.9939 F: 903.832.1700
www.mtgengineers.com

PROJECT: UNIVERSITY PH IV
DATE: 2/28/14
DESIGNED BY
CHECKED BY
DRAWN BY
APPROVED BY

UTILITY PLAN

PHASE IV UNIVERSITY

DEPART. OF ENGINEER & INFRASTRUCTURE
CITY OF TEXARKANA, TEXAS

DRAWING
SHEET 25
OF 50

X:\2011 Projects\116019 University Ave Phase 4, City of Texarkana, TX\05 Engineering Design\2014 Design\Design_07.pro
Wed Mar 12, 2014 10:19AM

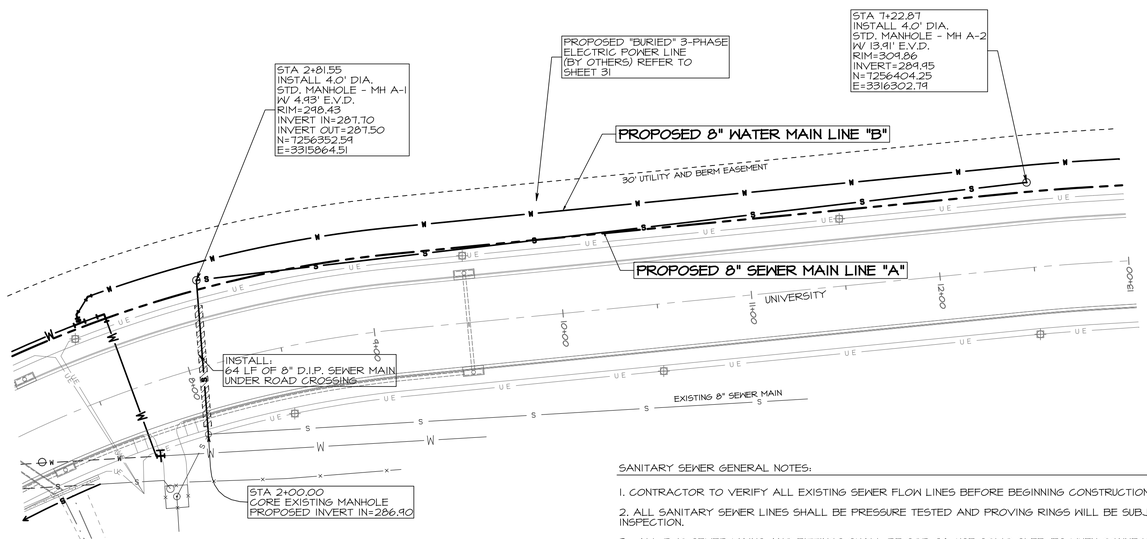

PLAN VIEW

Scale: 1" = 40'

SANITARY SEWER GENERAL NOTES:

1. CONTRACTOR TO VERIFY ALL EXISTING SEWER FLOW LINES BEFORE BEGINNING CONSTRUCTION.
2. ALL SANITARY SEWER LINES SHALL BE PRESSURE TESTED AND PROVING RINGS WILL BE SUBJECT TO VIDEO INSPECTION.
3. ALL PVC SEWER MAINS AND FITTINGS SHALL BE SDR-26. USE SOLID SLEEVES WHEN CONNECTING PVC TO DIP.
4. ALL WASTEWATER MAINS LOCATED UNDER CITY STREETS SHALL BE CONSTRUCTED OF DUCIILE IRON PIPE.
5. IF REQUIRED DUE TO CONSTRUCTION, POWER POLES TO BE BRACED AND OTHER EXISTING UTILITIES PROTECTED OR RELOCATED AT CONTRACTORS EXPENSE.
6. A MINIMUM OF 4" OF WASHED GRAVEL OR FIELD SAND SHALL BE PLACED BENEATH THE SEWER PIPES AND UP TO THE SPRING LINE OF THE PIPES.
7. SEWER SERVICE LINES 4" AND SMALLER CANNOT CONNECT TO A MANHOLE. THEY MUST CONNECT TO THE SEWER MAIN.
8. THE TEXARKANA WATER UTILITIES' ENGINEERING DEPARTIMENT MUST BE NOTIFIED AT LEAST TWENTY-FOUR (24) HOURS PRIOR TO ANY CONSTRUCTION BEING STARTED SO THAT AN INSPECTOR CAN BE ASSIGNED TO THE PROJECT.
9. WHERE STORM DRAIN PIPING IS PLACED OVER SEWER MAINS, USE DUCTILE IRON PIPE FOR THE MAINS AND MAINTAIN A MINIMUM COVER OF TWO FEET.
10. "DOG HOUSE" MANHOLES ARE NOT ALLOWED.

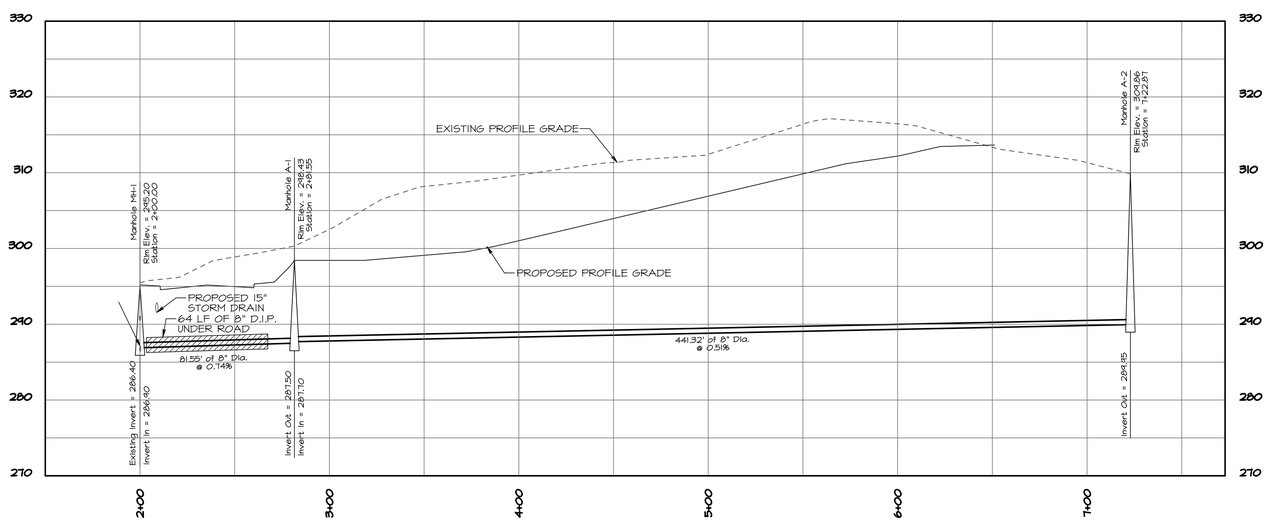

PROFILE VIEW

Horizontal Scale: 1" = 40'
Vertical Scale: 1" = 10'

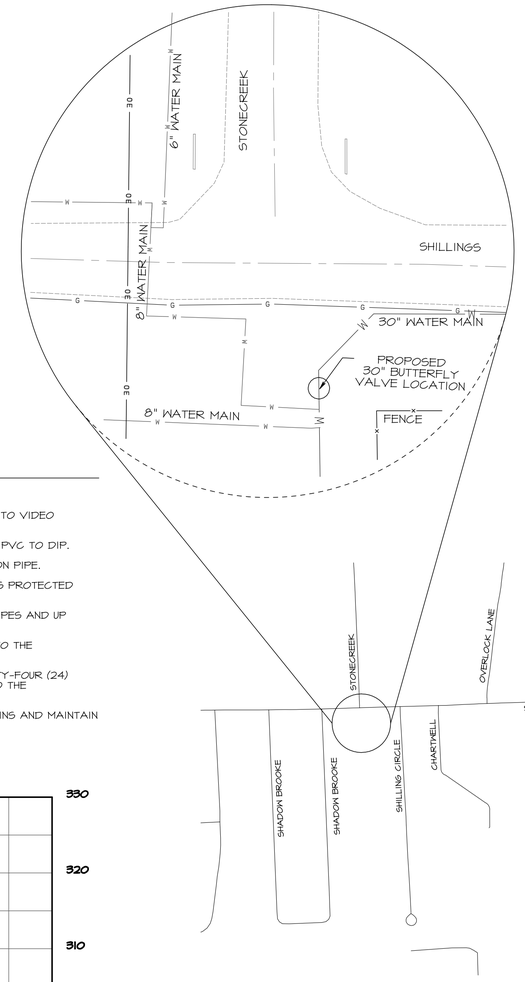

LEGEND

- RIGHT-OF-WAY / PROPERTY LINE
- EASEMENT LINE
- ROAD CENTER LINE
- OVERHEAD ELECTRIC LINE
- SEWER FORCE MAIN
- SEWER MAIN
- WATER MAIN
- SEWER MAIN (TO BE REMOVED)
- WATER MAIN (TO BE REMOVED)
- RETAINING WALL
- SILT FENCE
- ROCK FILTER DAM
- TOP OF BANK / SLOPE
- TOE OF SLOPE
- PROPOSED ELECTRIC CONDUIT
- PROPOSED CONTOUR
- GAS MAIN
- STORM DRAIN
- EXISTING SANITARY SEWER MANHOLE
- PROPOSED SANITARY SEWER MANHOLE
- POWER POLE
- PROPOSED LIGHT POLE

BUTTERFLY VALVE LOCATION

Scale: 1" = 40'

NOTES:

1. THE 30" BUTTERFLY VALVE WILL NEED TO BE INSTALLED BEFORE ANY WORK IS PERFORMED ON THE 30" MAIN.
2. THE 30" BUTTERFLY VALVE WILL NEED TO BE INSTALLED BETWEEN 11:00PM AND 6:00 AM TO MINIMIZE DISRUPTION TO THE EXISTING CUSTOMERS.
3. THERE IS AN EXISTING VALVE NEAR THE INTERSECTION OF UNIVERSITY AND SUMMERHILL ROAD AS SHOWN ON THE PREVIOUS SHEET. DRAINING OF THE LINE IS SUBSIDIARY TO THE WATER LINE INSTALLATION WORK.
4. A MINIMUM OF 72 HOURS MUST BE PROVIDED TO THE UTILITY PRIOR TO THE CONNECTIONS.
5. THIS WORK MUST BE COORDINATED VERY CLOSELY WITH THE UTILITY.

THE SEAL APPEARING ON THIS DOCUMENT WAS AUTHORIZED BY KAYLA R. WOOD, P.E. NO. 104859 ON 3/12/14. ALTERATION OF A SEALED DOCUMENT WITHOUT PRIOR NOTIFICATION TO THE RESPONSIBLE ENGINEER IS AN OFFENSE UNDER THE TEXAS ENGINEERING PRACTICE ACT.

STATE OF TEXAS
KAYLA R. WOOD
104859
REGISTERED PROFESSIONAL ENGINEER

REVISIONS | DATE
1
2
3
4

MTG engineers & surveyors
TOM E. FISH
KAYLA R. WOOD
5480 SUMMERHILL RD., P.O. BOX 3186
TEXARKANA, TEXAS 75501
P. 903.838.4593 F. 903.832.4700
www.mtgengineers.com

PROJECT: UNIVERSITY PH IV
DATE: 2/28/14
DESIGNED BY
CHECKED BY
APPROVED BY

SEWER PLAN & PROFILE

PHASE IV UNIVERSITY

DEPART. OF ENGINEER & INFRASTRUCTURE
CITY OF TEXARKANA, TEXAS

DRAWING

SHEET 26
OF 50

X:\2011 Projects\116019 University Ave Phase 4, City of Texarkana, TX\05 Engineering Design\2014 Design\Design_07.pro
Wed Mar 12, 2014 10:20AM

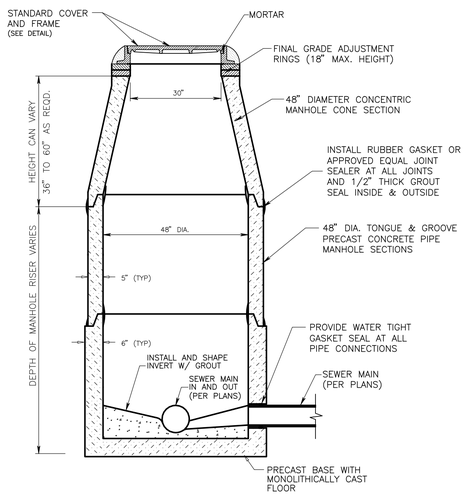

STANDARD PRECAST CONCRETE PIPE MANHOLE

SCALE: NONE

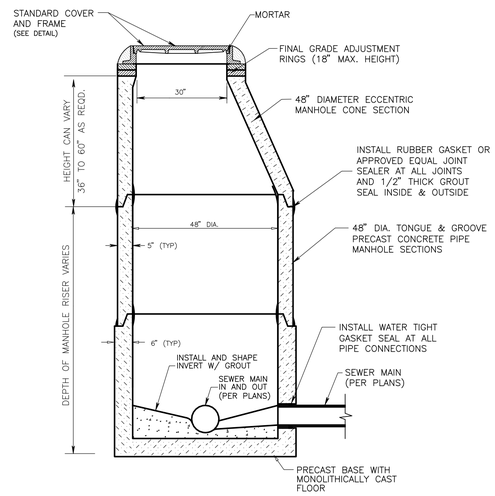

ECCENTRIC PRECAST CONCRETE PIPE MANHOLE

SCALE: NONE

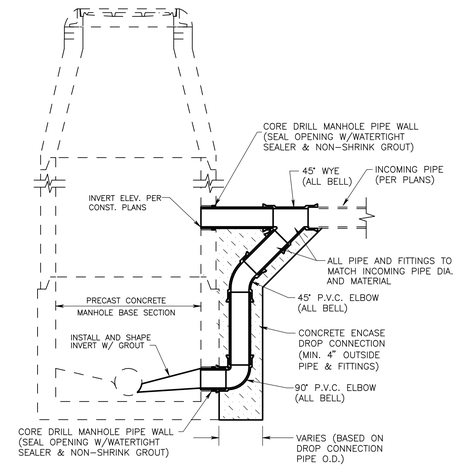

DROP CONNECTION TO PRECAST CONCRETE PIPE MANHOLE

SCALE: NONE

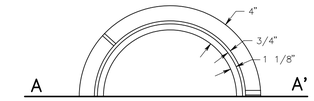

PLAN OF FRAME

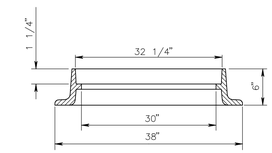

SECTION A–A'

STANDARD MANHOLE FRAME

SCALE: NONE

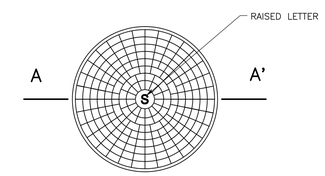

PLAN OF COVER

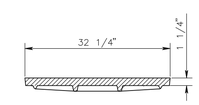

SECTION A–A'

STANDARD MANHOLE COVER

SCALE: NONE

NOTES:

1. PRECAST MANHOLES SHALL BE INSTALLED IN ACCORDANCE WITH ASTM C478.
2. MANHOLE FRAME AND COVER SHALL COMPLY WITH ASTM A48.
3. MANHOLE TESTING SHALL BE IN ACCORDANCE WITH ASTM C497. (MAXIMUM LEAKAGE OF 0.025 GALLONS PER HOUR PER FOOT OF JOINT @ 3 FEET OF HEAD)
4. SUBMITTALS SHALL BE SUBMITTED FOR COVER, FRAME, AND PRECAST MANHOLE.
5. SIX INCHES OF WASHED GRAVEL SHALL BE PLACED BENEATH ALL MANHOLES. (ASTM D2487 GP MATERIALS) 100% PASSING 1 1/2" SIEVE.

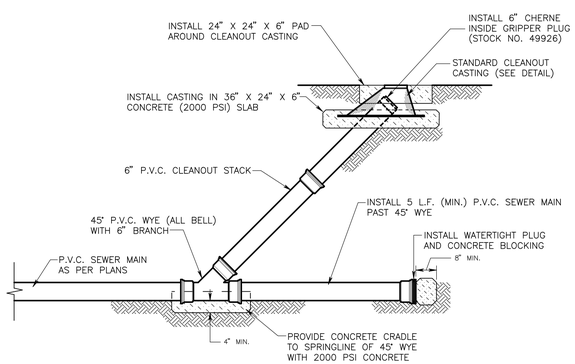

STANDARD CLEANOUT

SCALE: NONE

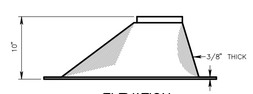

ELEVATION

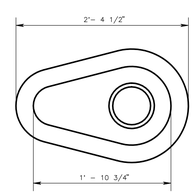

TOP VIEW

CLEANOUT CASTING

SCALE: NONE

CONSTRUCTION REQUIREMENTS:

1. THIS MANHOLE COVER SHALL NOT BE USED IN LOCATIONS SUBJECT TO INFLOW.

THE SEAL APPEARING ON THIS DOCUMENT WAS AUTHORIZED BY KAYLA R. WOOD, P.E. NO. 104859 ON 3/12/14. ALTERATION OF A SEALED DOCUMENT WITHOUT PRIOR NOTIFICATION TO THE RESPONSIBLE ENGINEER IS AN OFFENSE UNDER THE TEXAS ENGINEERING PRACTICE ACT.

REVISIONS | DATE
1
2
3
4

MTG engineers & surveyors
TBPE FIRM F-1439
TBPLS FIRM 10194
9480 SH 6 BRYAN, P.O. BOX 3166
TEXAS 77802-3166
P. 979.268.0293 F. 979.268.0297
www.mtgengineers.com

PROJECT: UNIVERSITY PH IV
DATE: 2/28/14
DESIGNED BY
CHECKED BY
APPROVED BY

WATER SYSTEM STANDARD DETAILS

PHASE IV UNIVERSITY

DEPART. OF ENGINEER & INFRASTRUCTURE
CITY OF TEXARKANA, TEXAS

DRAWING

SHEET 27 OF 50

X:\2011 Projects\116019 University Ave Phase 4, City of Texarkana, TX\05 Engineering Design\2014 Design\Design_07.pro
Wed Mar 12, 2014 9:47AM

TABLE 1 – QUANTITIES OF SAND, GRAVEL OR CONCRETE IN CUBIC YARD PER 100 LINEAR FEET, BASED ON MAXIMUM TRENCH WIDTH

INSIDE DIAMETER OF PIPE IN INCHES	KIND OF PIPE*	OUTSIDE DIAMETER OF PIPE IN INCHES D	TRENCH WIDTH W		EMBEDMENT	EMBEDMENT	ENCASEMENT
			MIN.	MAX.	SAND/GRAVEL	CONCRETE	CONCRETE
4"	P.V.C. SEWER PIPE	4.215	20"	28"	2.44	4.67	9.88
6"	P.V.C. SEWER PIPE	6.275	24"	28"	2.56	4.83	10.93
8"	P.V.C. SEWER PIPE	8.400	24"	28"	2.68	4.97	11.83
10"	P.V.C. SEWER PIPE	10.500	24"	28"	2.78	5.10	12.54
12"	P.V.C. SEWER PIPE	12.500	24"	28"	2.86	5.20	13.05
15"	P.V.C. SEWER PIPE	15.300	28"	39"	4.24	7.57	20.65
18"	D.I.P. SEWER MAIN	19.50	30"	42"	4.86	8.52	24.19
20"	D.I.P. SEWER MAIN	21.60	35"	44"	5.24	9.12	26.34
24"	D.I.P. SEWER MAIN	25.80	40"	48"	6.04	10.35	30.75
30"	D.I.P. SEWER MAIN	32.00	44"	60"	8.26	13.83	44.13
36"	D.I.P. SEWER MAIN	38.30	48"	66"	9.72	16.01	52.36

* OR AS SPECIFIED

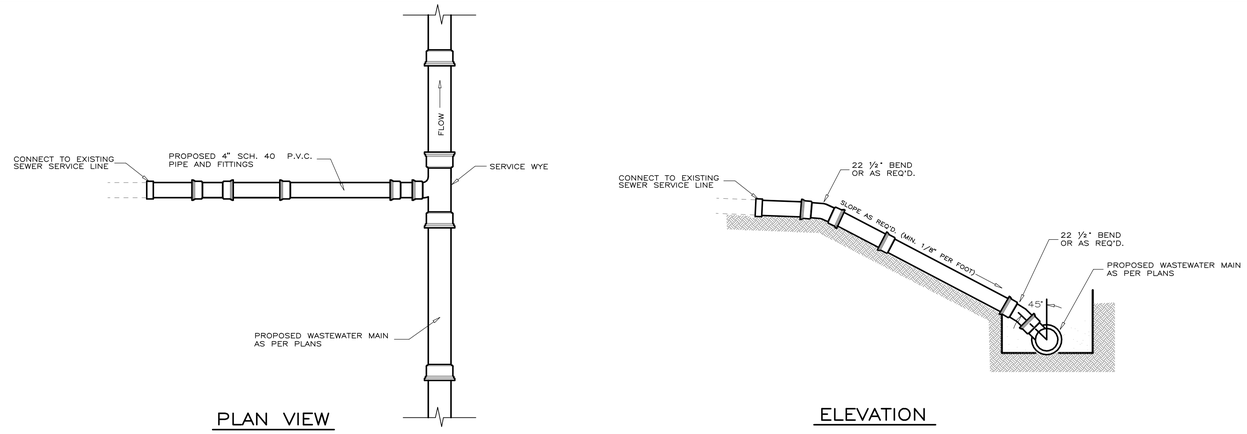

TYPICAL 4" WASTEWATER SERVICE CONNECTION

SCALE: NONE

MINIMUM SEPARATION REQUIREMENTS

1. DURING WASTEWATER MAIN CONSTRUCTION, THE CONTRACTOR SHALL MAINTAIN AT LEAST THE MINIMUM REQUIRED SEPARATION DISTANCES BETWEEN WATER MAINS AND WASTEWATER MAINS AS SPECIFIED BY THE TEXAS COMMISSION ON ENVIRONMENTAL QUALITY IN CHAPTER 217, SUBCHAPTER C: CONVENTIONAL COLLECTION SYSTEMS, RULE 217.53(d), SEPARATION DISTANCES BETWEEN PUBLIC WATER SUPPLY PIPES AND WASTEWATER COLLECTION SYSTEM PIPES OR MANHOLES.
2. WHEN NEW WASTEWATER MAINS ARE INSTALLED, THEY SHALL NOT BE INSTALLED CLOSER THAN 9 FEET (IN ANY DIRECTION) TO EITHER EXISTING OR PROPOSED WATER MAINS, AND PARALLEL WASTEWATER AND WATER MAINS MUST BE INSTALLED IN SEPARATE TRENCHES. SHOULD THERE BE ANY DOUBT OR WHEN THE 9 FOOT SEPARATION DISTANCE CANNOT BE ACHIEVED, CONTACT THE ENGINEER IMMEDIATELY.

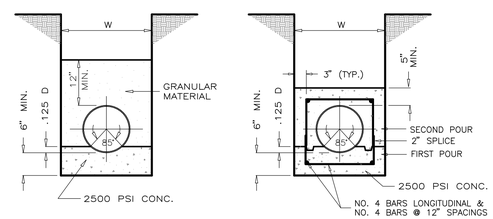

WASTEWATER MAIN EMBEDMENT DETAILS

(CONFORMING TO ASTM D–2321)

NOTES:

1. ALL SEWER MAINS LOCATED UNDER CITY/COUNTY ROADS SHALL BE CONSTRUCTED OF DUCTILE IRON PIPE OR PROTECTED BY STEEL ENCASEMENT. ALL MAINS LOCATED UNDER HIGHWAYS SHALL BE PROTECTED BY STEEL ENCASEMENT.
2. SEWER MAINS SHALL BE CONSTRUCTED WITH THE FOLLOWING:
   A) SDR 26 PIPE
   B) SOLID SLEEVES WHEN CONNECTING TO DIP OR PVC
   C) LOCATOR TAPE
3. ALL TRENCHING SHALL BE IN ACCORDANCE WITH OSHA REGULATIONS.

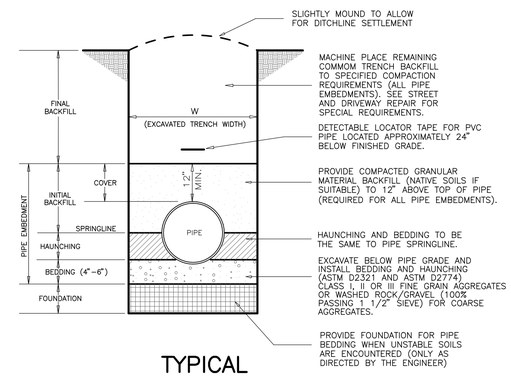

TYPICAL TRENCH CONSTRUCTION AND PIPE INSTALLATION

SCALE: NONE

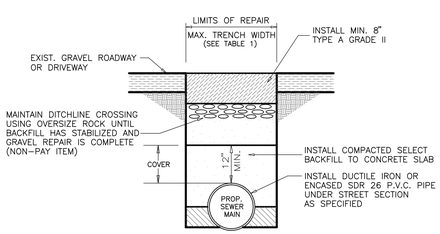

TYPICAL SECTION FOR GRAVEL STREET OR DRIVEWAY REPAIR

SCALE: NONE

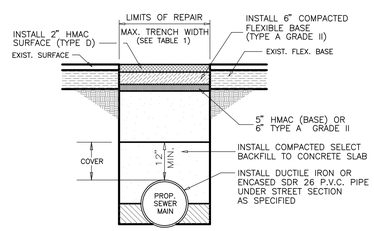

TYPICAL SECTION FOR ASPHALT SURFACE/FLEXIBLE BASE STREET OR DRIVEWAY REPAIR

SCALE: NONE

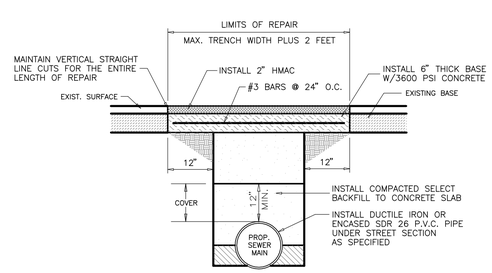

NOTE: LIMITS OF INITIAL PAVEMENT REMOVAL SHALL BE TO MAXIMUM TRENCH WIDTH ONLY. AFTER OPTIMUM TRENCH SETTLEMENT HAS BEEN OBTAINED, REMOVE ADDITIONAL PAVEMENT AND ACCOMPLISH REPAIR SECTION AS SHOWN.

TYPICAL SECTION FOR ASPHALT SURFACE/CONCRETE BASE STREET OR DRIVEWAY REPAIR

SCALE: NONE

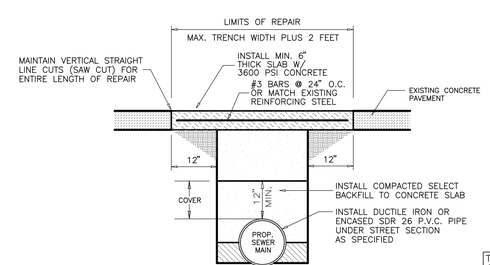

NOTE: LIMITS OF INITIAL PAVEMENT REMOVAL SHALL BE TO MAXIMUM TRENCH WIDTH ONLY. AFTER OPTIMUM TRENCH SETTLEMENT HAS BEEN OBTAINED, SAW CUT AND REMOVE ADDITIONAL PAVEMENT AND ACCOMPLISH REPAIR SECTION AS SHOWN.

TYPICAL SECTION FOR CONCRETE STREET OR DRIVEWAY REPAIR

SCALE: NONE

THE SEAL APPEARING ON THIS DOCUMENT WAS AUTHORIZED BY KAYLA R. WOOD, P.E. NO. 104859 ON 3/12/14. ALTERATION OF A SEALED DOCUMENT WITHOUT PRIOR NOTIFICATION TO THE RESPONSIBLE ENGINEER IS AN OFFENSE UNDER THE TEXAS ENGINEERING PRACTICE ACT.

STATE OF TEXAS
KAYLA R. WOOD
104859
REGISTERED
PROFESSIONAL ENGINEER

REVISIONS	DATE
1	
2	
3	
4	

MTG engineers & surveyors
TBPE FIRM F-1386 TBPLS FIRM 10194004
9480 SH-6 BRYAN RD., P.O. BOX 3186 BRYAN, TEXAS 77805
P. 979.268.0293 F. 979.268.0217
www.mtgengineers.com

PROJECT: UNIVERSITY PH IV
DATE: 2/28/14
DESIGNED BY
CHECKED BY
APPROVED BY

WATER SYSTEM STANDARD DETAILS

PHASE IV UNIVERSITY

DEPART. OF ENGINEER & INFRASTRUCTURE
CITY OF TEXARKANA, TEXAS

DRAWING

SHEET 28 OF 50

X:\2011 Projects\116019 University Ave Phase 4, City of Texarkana, TX\05 Engineering Design\2014 Design\Design_07.pro
Wed Mar 12, 2014 9:48AM

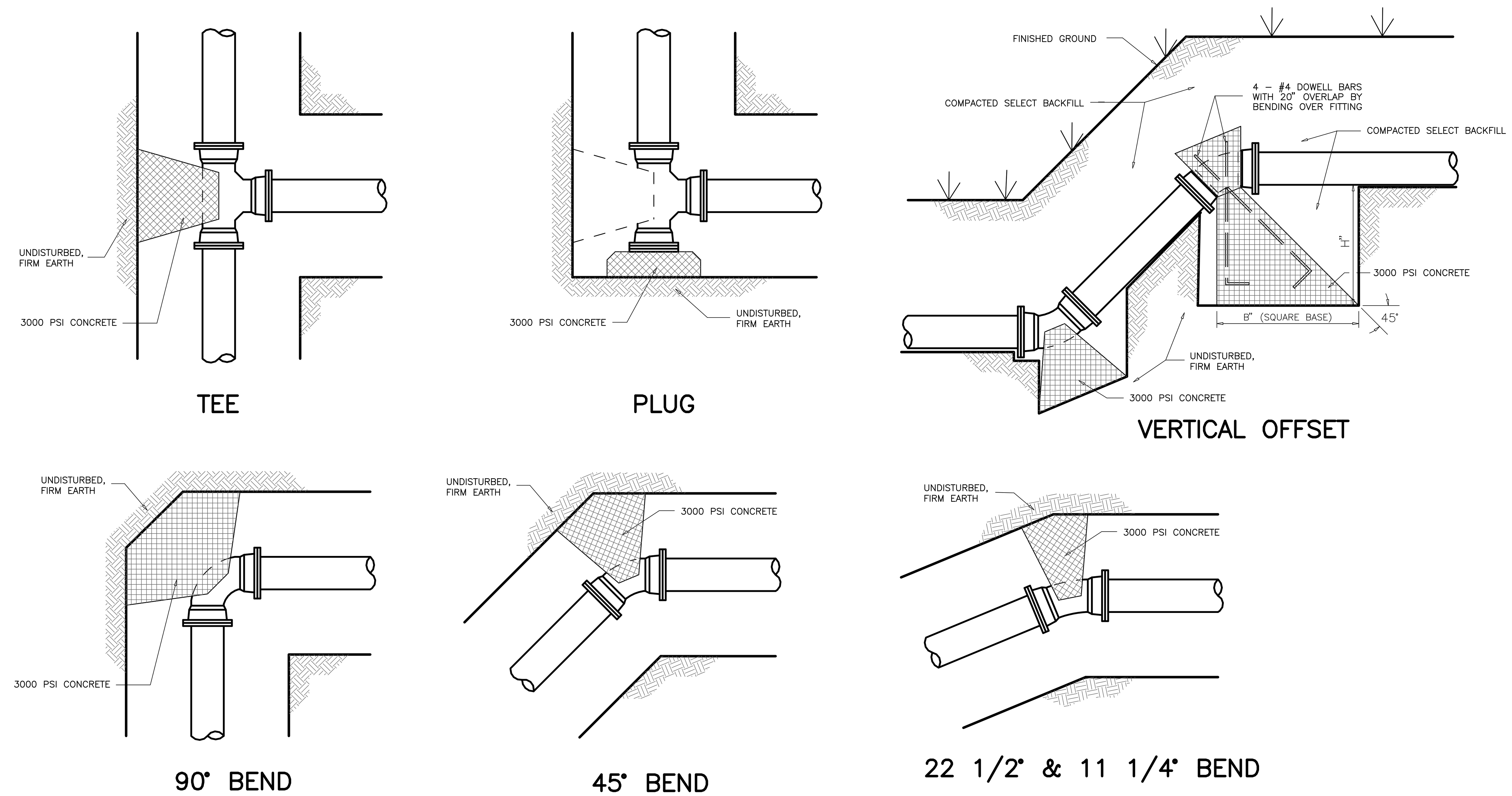

THRUST BLOCKING FOR STANDARD FITTINGS

TABLE 1 – QUANTITIES OF SAND, GRAVEL OR CONCRETE IN CUBIC YARD PER 100 LINEAR FEET, BASED ON AVERAGE TRENCH WIDTH							
INSIDE DIAMETER OF PIPE IN INCHES	KIND OF PIPE*	OUTSIDE DIAMETER OF PIPE IN INCHES D	TRENCH WIDTH W		EMBEDMENT	EMBEDMENT	ENCASEMENT
			MIN.	MAX.	SAND/GRAVEL	CONCRETE	CONCRETE
4"	D.I.P. WATER MAIN	4.80	18"	22"	1.76	3.36	7.14
6"	D.I.P. WATER MAIN	6.90	24"	28"	2.41	4.52	10.34
8"	D.I.P. WATER MAIN	9.05	24"	28"	2.50	4.64	11.09
10"	D.I.P WATER MAIN	11.10	24"	28"	2.58	4.75	11.62
12"	D.I.P. WATER MAIN	13.20	24"	28"	2.66	4.84	11.99
16"	D.I.P. WATER MAIN	17.40	28"	32"	3.25	5.84	15.02
18"	D.I.P. WATER MAIN	19.50	30"	36"	3.69	6.56	17.36
20"	D.I.P. WATER MAIN	21.60	35"	40"	4.35	7.66	21.05
24"	D.I.P. WATER MAIN	25.80	40"	44"	5.14	8.93	25.22
30"	D.I.P. WATER MAIN	32.00	44"	48"	5.96	10.23	29.00
36"	D.I.P. WATER MAIN	38.30	48"	52"	6.81	11.57	32.48

* OR P.V.C. OR AS SPECIFIED

TABLE 2 – GENERAL DATA FOR BLOCKING STANDARD FITTINGS *												
PIPE SIZE	MINIMUM SURFACE AREA (S.F.) FOR CONCRETE THRUST BLOCKING AGAINST UNDISTURBED EARTH WITH WITH 2,000 LBS./S.F. BEARING LOAD						MINIMUM DIMENSIONS FOR CONCRETE ANCHORING BLOCK FOR OFFSET BENDS (INCHES)					
	PLUG	TEE	90° BEND	45° BEND	22 1/2° BEND	11 1/4° BEND	45° BEND		22 1/2° BEND		11 1/4° BEND	
							B	H	B	H	B	H
4"	1.50	1.50	2.00	1.50	1.00	1.00						
6"	2.50	2.50	3.50	2.00	1.50	1.00						
8"	4.50	4.50	6.00	3.50	2.50	1.50						
10"	7.00	7.00	10.00	5.50	4.00	2.00						
12"	10.00	10.00	14.00	8.00	5.50	3.00						
16"	18.00	18.00	25.00	14.00	9.50	5.00						
18"	23.00	23.00	32.00	17.50	12.00	6.00						
20"	28.50	28.50	39.00	21.50	15.00	7.50						
24"	41.00	41.00	56.50	31.00	21.50	11.00						
30"	64.00	64.00	88.50	48.50	34.00	17.00						
36"	92.00	92.00	127.00	70.00	49.00	25.00						

* BASED ON 100 PSI WORKING PRESSURE x 2.5 SAFETY FACTOR

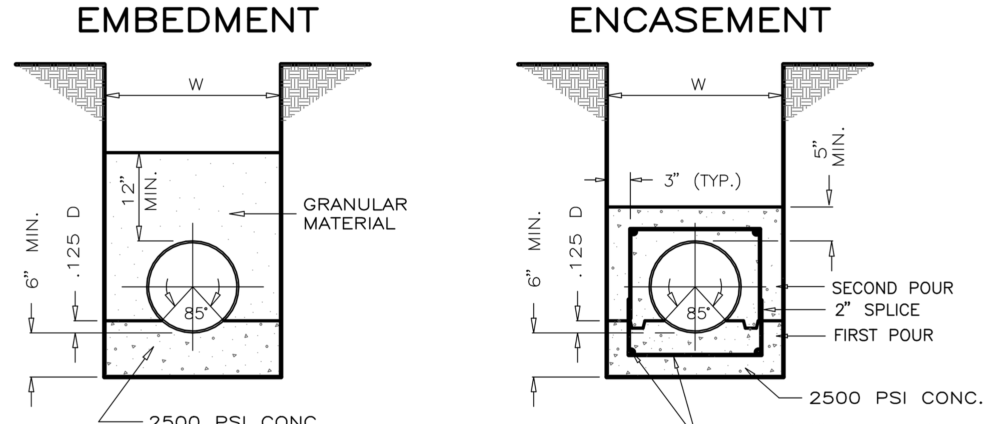

WATER MAIN EMBEDMENT DETAILS

NOTES:

1. ALL WATER MAINS SHALL BE PVC C–900 (CLASS 235, DR–18) OR DUCTILE IRON PIPE AND ALL FITTINGS SHALL BE DUCTILE IRON PIPE (DIP). WATER MAINS AND FITTINGS (TAPPING SLEEVES) MUST BE HYDROSTATICALLY TESTED. WATER PIP SHALL HAVE A MINIMUM COVER OF FORTY TWO (42") INCHES AFTER FINAL GRADING.

2. ALL MECHANICAL JOINTS, BENDS, FITTINGS, VALVES, ETC., MUST BE LOCKED ON THE MECHANICAL JOINT RESTRAINTS SUCH AS MEGA–LUGS, RESTRAINED JOINTS, OR RESTRAINED GASKETS WITH THE REQUIRED THRUST BLOCKING.

3. ALL WATER AND SEWER MAINS LOCATED UNDER CITY STREETS SHALL BE CONSTRUCTED OF DUCTILE IRON PIPE (DIP).

4. ALL FIRE HYDRANTS SHALL BE TESTED AND PAINTED TO MEET THE FIRE FLOW COLOR CODE AS PER TEXARKANA WATER UTILITIES STANDARDS. THE BARRELS OF THE HYDRANTS SHALL BE PAINTED "SAFETY YELLOW" AND THE CAPS AND BONNET SHALL BE PAINTED ACCORDING TO THE RESULTS OF THE FLOW TEST: RED – 0 499 GALLONS PER MINUTE (GPM); ORANGE 500 – 999 GPM; AND GREEN –> 1000 GPM.

5. PLACE #10 GAUGE SOLID TRACER WIRE AND LOCATOR TAPE WITH THE WATER PIPE. THE TRACER WIRE SHALL BE ATTACHED TO THE TOP OF THE PIPE AND BE CONTINUOUS BETWEEN TRACER WIRE TEST STATIONS AND SECURED TO THE TEST STATION. THE TEST STATIONS SHALL BE MANUFACTURED BY SNAKE PIT OR AN APPROVED EQUAL AND LOCATED ADJACENT TO ALL FIRE HYDRANTS AND AT ALL WATER MAIN INTERSECTIONS. THE TEST STATIONS SHALL BE INSTALLED IN A 2'X2'X6' CONCRETE PAD. THE LOCATOR TAPE SHALL BE PLACED TWENTY FOUR (24") INCHES BELOW FINISHED GRADE.

6. WHERE WATER LINES AND SEWER LINES CROSS USE DUCTILE IRON PIPE. MUST MAINTAIN A MINIMUM VERTICAL CLEARANCE BETWEEN WATER AND SEWER PIPE OF 18" AND HORIZONTAL CLEARANCE OF 10'.

7. FOR ALL TEXARKANA WATER UTILITY PROJECTS, VALVES SHALL OPEN RIGHT.

8. TESTING SHALL BE DONE IN ACCORDANCE WITH AWWA C600 AND TCEQ REGULATIONS.

9. DISINFECTION SHALL BE DONE IN ACCORDANCE WITH AWWA C651 AND TCEQ REGULATIONS.

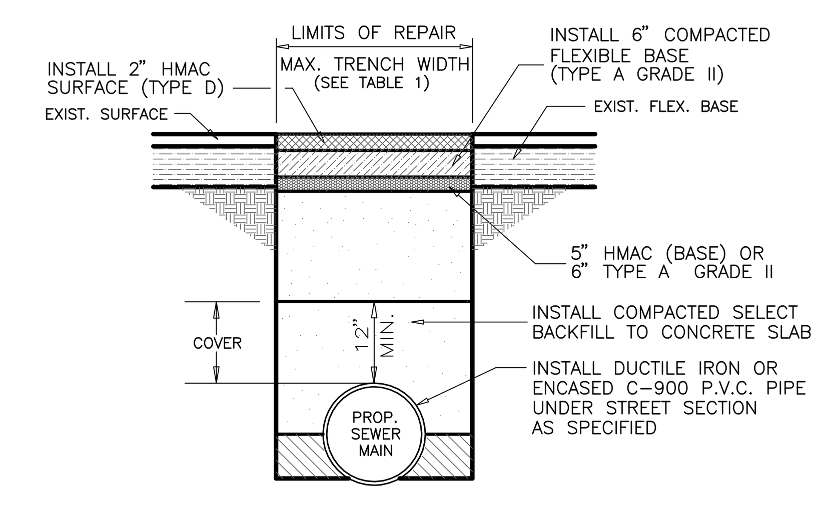

TYPICAL SECTION FOR ASPHALT SURFACE/FLEXIBLE BASE STREET OR DRIVEWAY REPAIR

SCALE: NONE

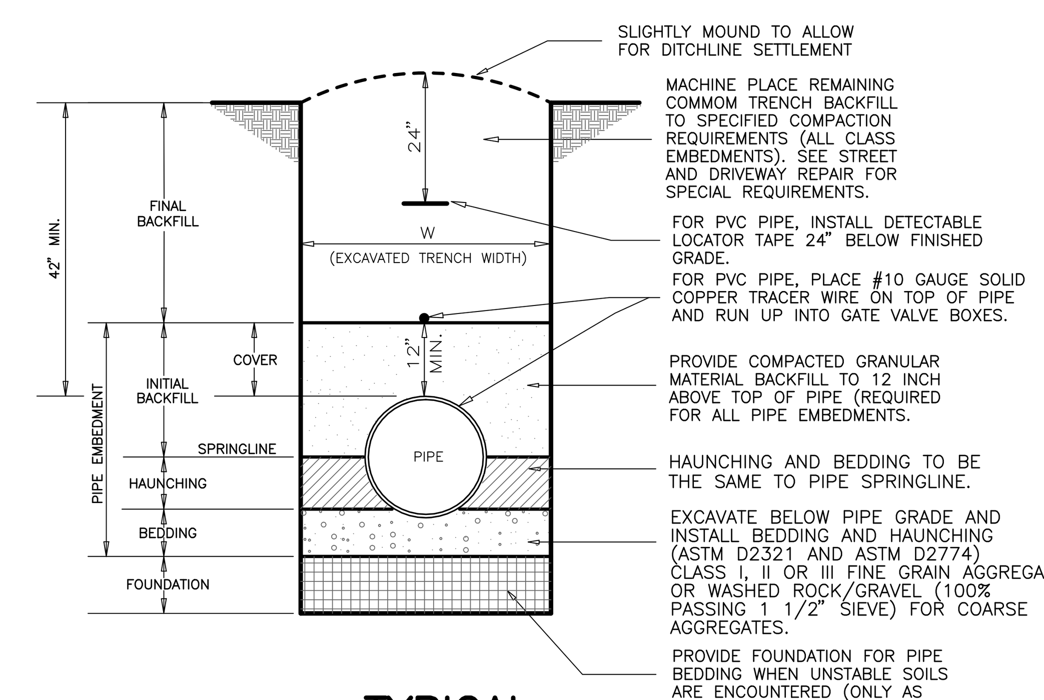

TYPICAL TRENCH CONSTRUCTION AND PIPE INSTALLATION

SCALE: NONE

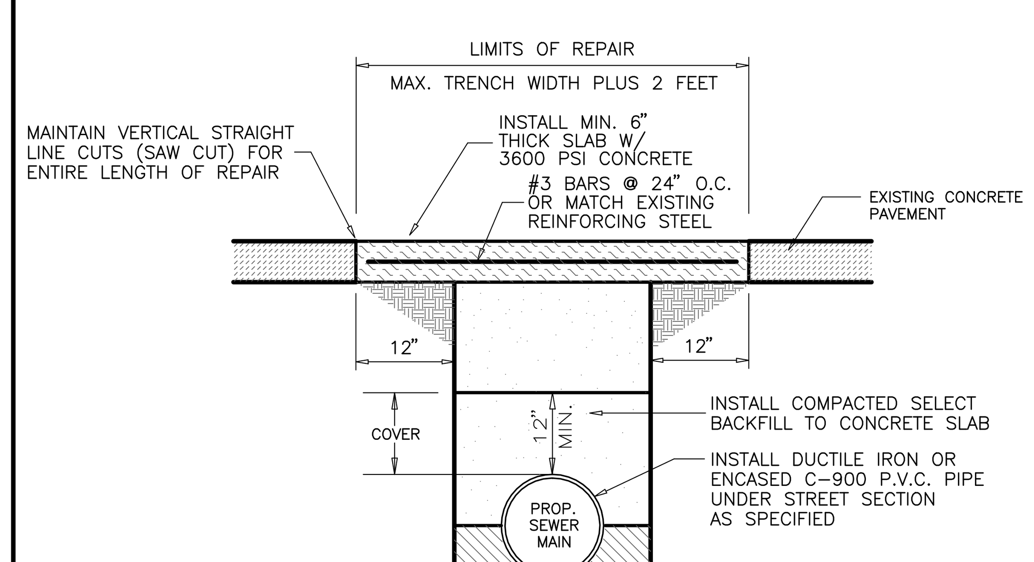

NOTE: LIMITS OF INITIAL PAVEMENT REMOVAL SHALL BE TO MAXIMUM TRENCH WIDTH ONLY. AFTER OPTIMUM TRENCH SETTLEMENT HAS BEEN OBTAINED, SAW CUT AND REMOVE ADDITIONAL PAVEMENT AND ACCOMPLISH REPAIR SECTION AS SHOWN.

TYPICAL SECTION FOR CONCRETE STREET OR DRIVEWAY REPAIR

SCALE: NONE

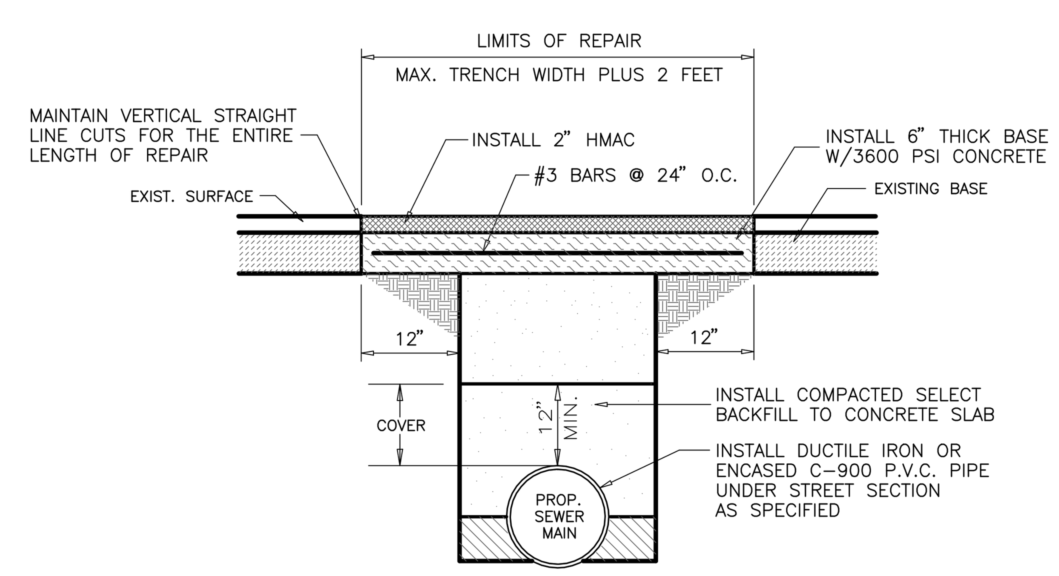

NOTE: LIMITS OF INITIAL PAVEMENT REMOVAL SHALL BE TO MAXIMUM TRENCH WIDTH ONLY. AFTER OPTIMUM TRENCH SETTLEMENT HAS BEEN OBTAINED, REMOVE ADDITIONAL PAVEMENT AND ACCOMPLISH REPAIR SECTION AS SHOWN.

TYPICAL SECTION FOR ASPHALT SURFACE/CONCRETE BASE STREET OR DRIVEWAY REPAIR

SCALE: NONE

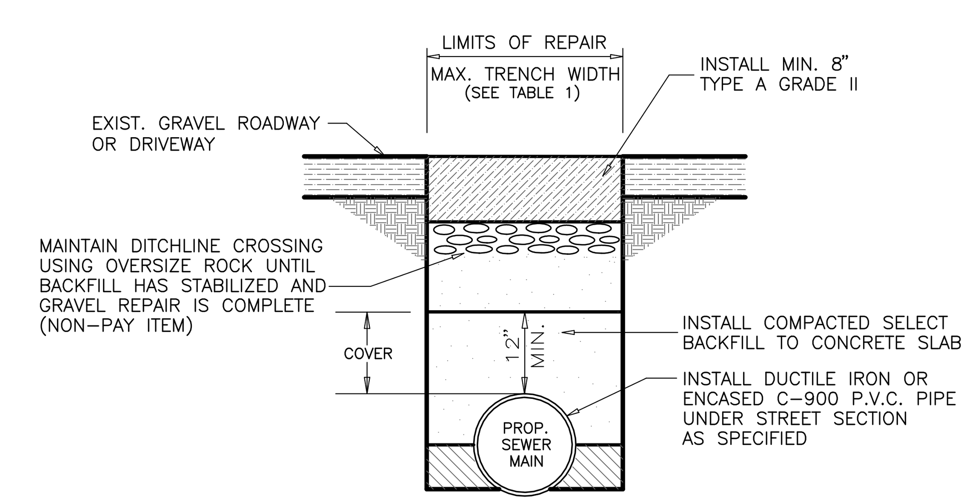

TYPICAL SECTION FOR GRAVEL STREET OR DRIVEWAY REPAIR

SCALE: NONE

THE SEAL APPEARING ON THIS DOCUMENT WAS AUTHORIZED BY KAYLA R. WOOD, P.E. NO. 104859 ON 3/12/14. ALTERATION OF A SEALED DOCUMENT WITHOUT PRIOR NOTIFICATION TO THE RESPONSIBLE ENGINEER IS AN OFFENSE UNDER THE TEXAS ENGINEERING PRACTICE ACT.

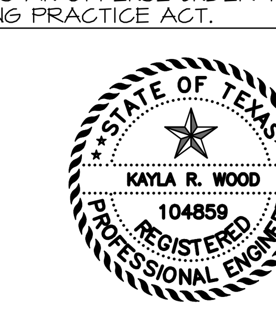

REVISIONS	DATE
1	
2	
3	
4	

MTG engineers & surveyors
TBPE FIRM NO. F-354
5930 SUMMERHILL RD. | P.O. BOX 3786
TEXARKANA TEXAS 75501
P 903.838.8533 | F 903.832.4700
www.mtgengineers.com

PROJECT: UNIVERSITY PH IV
DATE: 2/28/14
DESIGNED BY
CHECKED BY
APPROVED BY

WASTEWATER SYSTEM STANDARD DETAILS

PHASE IV UNIVERSITY

DEPART. OF ENGINEER & INFRASTRUCTURE
CITY OF TEXARKANA, TEXAS

DRAWING
SHEET 29 OF 50

X:\2011 Projects\116019 University Ave Phase 4, City of Texarkana, TX\05 Engineering Design\2014 Design\Design_07.pro
Wed Mar 12, 2014 9:48AM

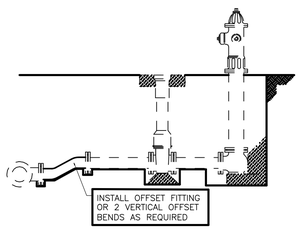

OPTION 3

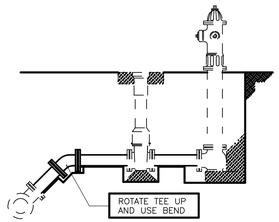

OPTION 2

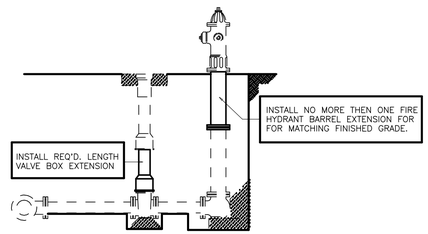

OPTION 1 (PREFERRED)

NOTE:

1. OPTION 3 IS THE PREFERRED INSTALLATION METHOD, HOWEVER COMBINATIONS OF OPTIONS 1, 2 AND 3 MAY BE USED WHEN WATER MAIN IS INSTALLED AT EXCESSIVE DEPTHS AND WHEN APPROVED BY THE ENGINEER.
2. LOCATE VALVES BEHIND CURBS OR OUTSIDE PAVED ROADWAYS WHEN POSSIBLE.

TYPICAL FIRE HYDRANT GRADE ADJUSTMENTS

SCALE: NONE

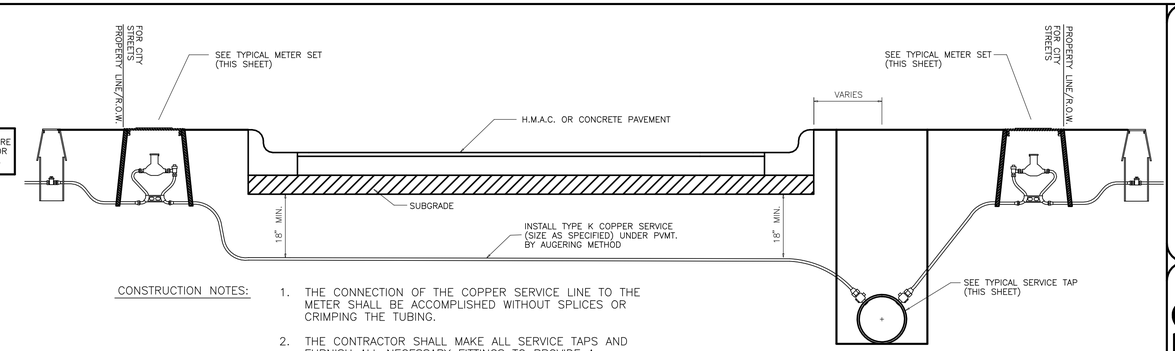

CONSTRUCTION NOTES:

1. THE CONNECTION OF THE COPPER SERVICE LINE TO THE METER SHALL BE ACCOMPLISHED WITHOUT SPLICES OR CRIMPING THE TUBING.
2. THE CONTRACTOR SHALL MAKE ALL SERVICE TAPS AND FURNISH ALL NECESSARY FITTINGS TO PROVIDE A COMPLETE SERVICE CONNECTION.
3. THE WATER METER SHALL BE FURNISHED BY OTHERS UNLESS SPECIFICALLY NOTED OTHERWISE.

TYPICAL WATER SERVICE TRANSFER/INSTALLATION

SCALE: NONE

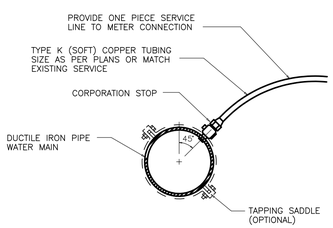

TYPICAL SERVICE TAP TO DUCTILE IRON WATER MAIN

SCALE: NONE

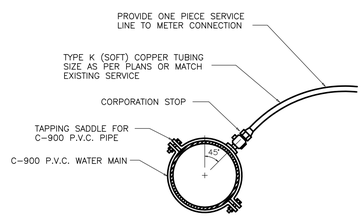

TYPICAL SERVICE TAP TO P.V.C. WATER MAIN

SCALE: NONE

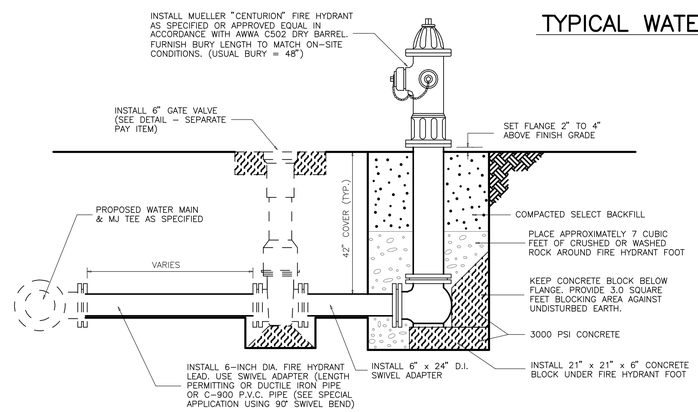

TYPICAL FIRE HYDRANT INSTALLATION

SCALE: NONE

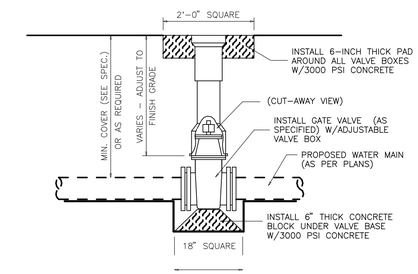

TYPICAL GATE VALVE INSTALLATION

SCALE: NONE

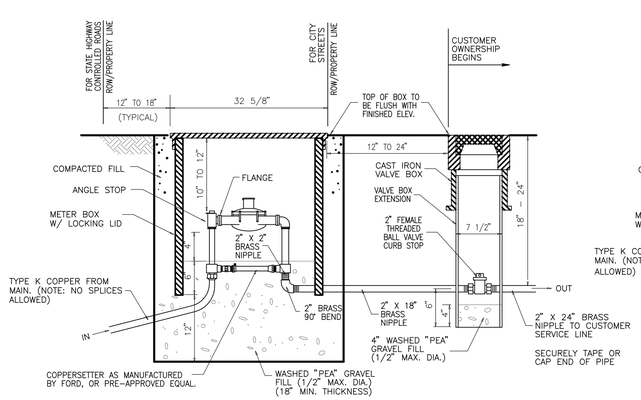

TYPICAL 2" VERTICAL INLET METER SET

SCALE: NONE

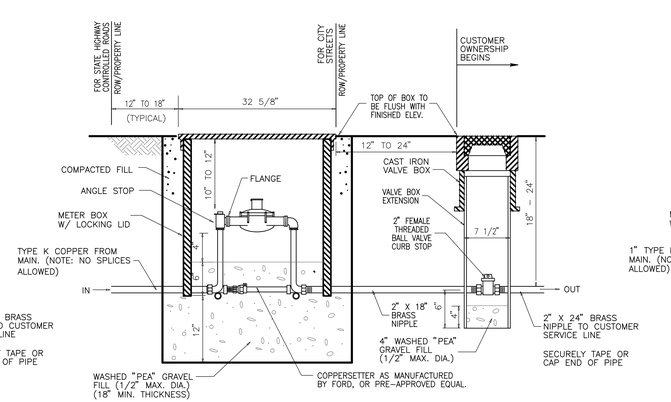

TYPICAL 2" HORIZONTAL INLET METER SET

SCALE: NONE

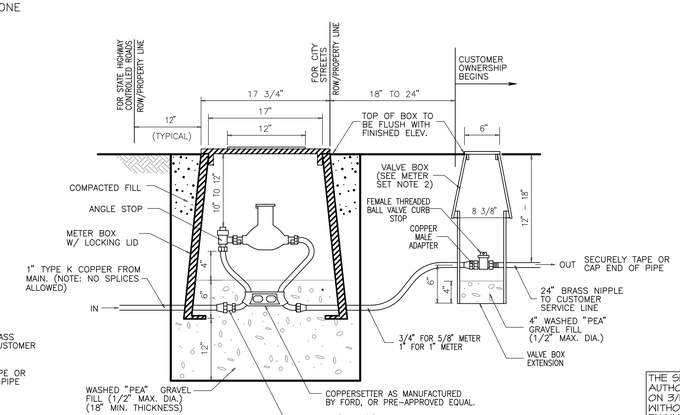

TYPICAL 5/8" & 1" METER SET

SCALE: NONE

METER SET NOTES:

1. ALL METERS TO BE FURNISHED AND INSTALLED BY TEXARKANA WATER UTILITIES.
2. CAST IRON VALVE BOXES ARE REQUIRED WHEN INSTALLED IN CONCRETE.
3. MINIMUM SERVICE TAP SIZE FOR 5/8" METER SET SHALL BE 1" FROM MAIN TO METER.
4. ALL VALVE BOX EXTENSIONS SHALL BE 6" PVC PIPE (SDR 26 OR GREATER) AND SHALL BE NOTCHED TO SET OVER PIPES TO PROVIDE 6" DIMENSION AS SHOWN.
5. ALL METER BOXES SHALL BE PLASTIC WITH PLASTIC RING AND LID AS MANUFACTURED BY EAST JORDAN IRON WORKS, INC.

THE SEAL APPEARING ON THIS DOCUMENT WAS AUTHORIZED BY KAYLA R. WOOD, P.E. NO. 104859 ON 3/12/14. ALTERATION OF A SEALED DOCUMENT WITHOUT PRIOR NOTIFICATION TO THE RESPONSIBLE ENGINEER IS AN OFFENSE UNDER THE TEXAS ENGINEERING PRACTICE ACT.

STATE OF TEXAS
KAYLA R. WOOD
104859
REGISTERED PROFESSIONAL ENGINEER

REVISIONS	DATE
1	
2	
3	
4	

MTG engineers & surveyors
TBPE FIRM F-10084
TBPLS FIRM 10194
9480 SUMMERHILL RD., P.O. BOX 3166
TEXARKANA, TEXAS 75504
P. 903.838.4939 F. 903.832.1700
www.mtgengineers.com

PROJECT: UNIVERSITY PH IV
DATE: 2/28/14
DESIGNED BY
CHECKED BY
APPROVED BY

WASTEWATER SYSTEM STANDARD DETAILS

PHASE IV UNIVERSITY

DEPART. OF ENGINEER & INFRASTRUCTURE
CITY OF TEXARKANA, TEXAS

DRAWING

SHEET 30 OF 50

X:\2011 Projects\116019 University Ave Phase 4, City of Texarkana, TX\05 Engineering Design\2014 Design\Design_07.pro
Wed Mar 12, 2014 9:49AM

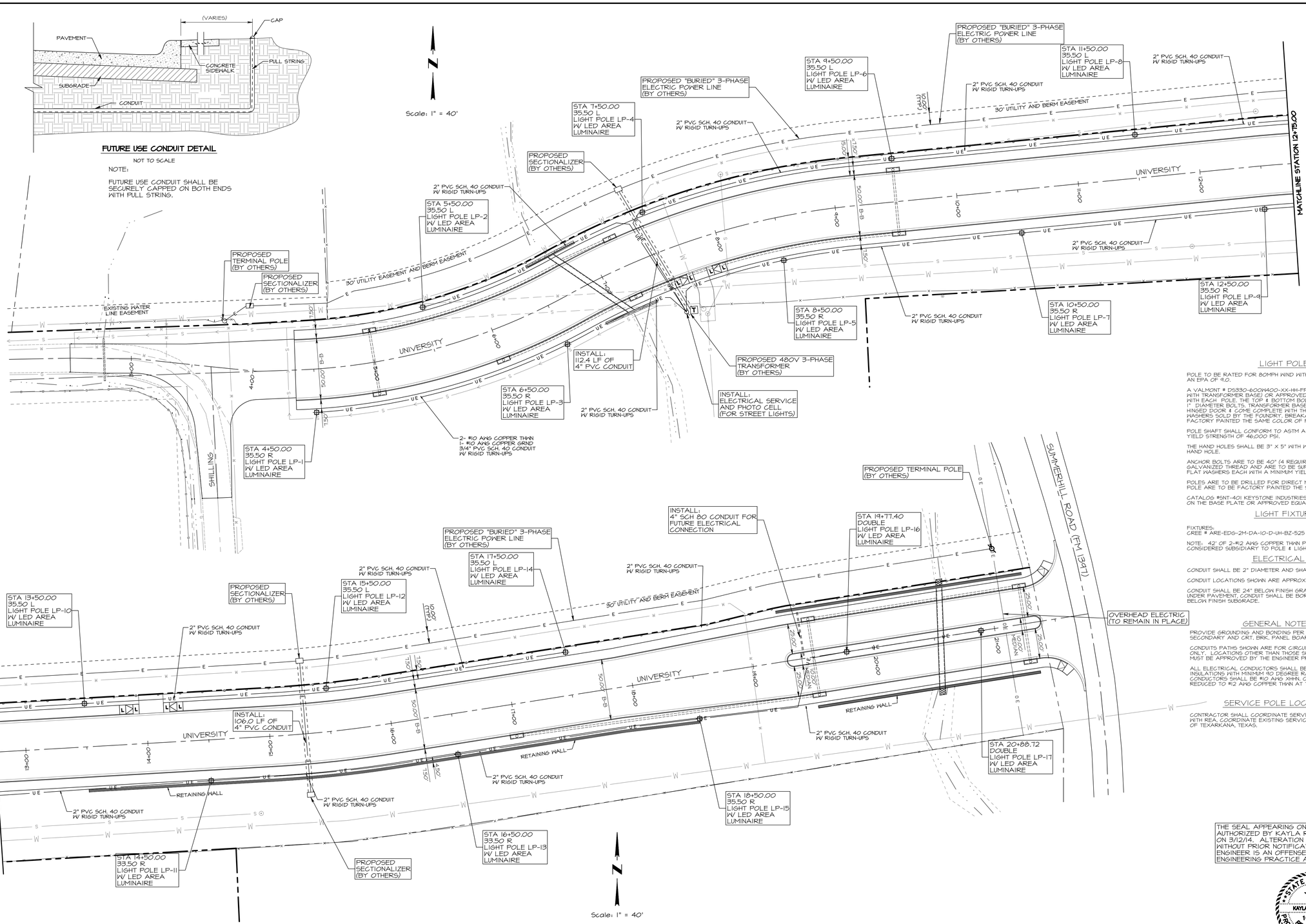

FUTURE USE CONDUIT DETAIL

NOT TO SCALE

NOTE:

FUTURE USE CONDUIT SHALL BE SECURELY CAPPED ON BOTH ENDS WITH PULL STRING.

LIGHT POLES

POLE TO BE RATED FOR 80MPH WIND WITH 1.3 GUST FACTOR AND HAVE AN EPA OF 9.0.

A VALMONT # DS330-600X400-XX-HH-FP-FBC-AB-M093-TB1-17 (POLE WITH TRANSFORMER BASE) OR APPROVED EQUAL, SHALL BE INSTALLED WITH EACH POLE. THE TOP & BOTTOM BOLT CIRCLE SHALL BE 12 3/4" WITH 1" DIAMETER BOLTS. TRANSFORMER BASE SHALL BE SUPPLIED WITH A HINGED DOOR & COVE COMPLETE WITH THE ZINC MECHANICAL DEPOSIT WASHERS SOLD BY THE FOUNDRY. BREAKAWAY TRANSFORMER TO BE FACTORY PAINTED THE SAME COLOR OF POLES AND FIXTURES.

POLE SHAFT SHALL CONFORM TO ASTM A-500 GRADE B WITH A MINIMUM YIELD STRENGTH OF 46,000 PSI.

THE HAND HOLES SHALL BE 3" X 5" WITH WELDED GROUND LUGS OPPOSITE HAND HOLE.

ANCHOR BOLTS ARE TO BE 40" (4 REQUIRED) LONG WITH A MINIMUM OF 4" GALVANIZED THREAD AND ARE TO BE SUPPLIED WITH 2 HEX NUTS AND 2 FLAT WASHERS EACH WITH A MINIMUM YIELD STRENGTH OF 55,000 PSI.

POLES ARE TO BE DRILLED FOR DIRECT MOUNTING AND THE FIXTURE AND POLE ARE TO BE FACTORY PAINTED THE SAME COLOR.

CATALOG #SNT-401 KEYSTONE INDUSTRIES WITH A 12 3/4" BOLT CIRCLE ON THE BASE PLATE OR APPROVED EQUAL.

LIGHT FIXTURES

FIXTURES:
CREE # ARE-EDG-2M-DA-10-D-UH-BZ-525 OR APPROVED EQUAL.

NOTE: 42' OF 2-#12 AWG COPPER THWN PER LIGHT FIXTURE REQUIRED & CONSIDERED SUBSIDIARY TO POLE & LIGHT FIXTURES.

ELECTRICAL CONDUIT

CONDUIT SHALL BE 2" DIAMETER AND SHALL BE NEC APPROVED.

CONDUIT LOCATIONS SHOWN ARE APPROXIMATE LOCATIONS.

CONDUIT SHALL BE 24" BELOW FINISH GRADE. WHEN CROSSING UNDER PAVEMENT, CONDUIT SHALL BE BORED IN AND BE 24" BELOW FINISH SUBGRADE.

GENERAL NOTES

PROVIDE GROUNDING AND BONDING PER N.E.C. FOR TRANSFORMER SECONDARY AND CKT. BRK. PANEL BOARDS.

CONDUITS PATHS SHOWN ARE FOR CIRCUIT DEFINITION PURPOSES ONLY. LOCATIONS OTHER THAN THOSE SHOWN ON THE PLANS MUST BE APPROVED BY THE ENGINEER PRIOR TO CONSTRUCTION.

ALL ELECTRICAL CONDUCTORS SHALL BE COPPER AND WILL HAVE XHHN INSULATIONS WITH MINIMUM 90 DEGREE RATING. ALL UNDERGROUND CONDUCTORS SHALL BE #10 AWG XHHN. CONDUCTORS SHALL BE REDUCED TO #12 AWG COPPER THWN AT THE POLE.

SERVICE POLE LOCATIONS

CONTRACTOR SHALL COORDINATE SERVICE POLE LOCATIONS WITH REA. COORDINATE EXISTING SERVICES WITH THE CITY OF TEXARKANA, TEXAS.

THE SEAL APPEARING ON THIS DOCUMENT WAS AUTHORIZED BY KAYLA R. WOOD, P.E. NO. 104859 ON 3/12/14. ALTERATION OF A SEALED DOCUMENT WITHOUT PRIOR NOTIFICATION TO THE RESPONSIBLE ENGINEER IS AN OFFENSE UNDER THE TEXAS ENGINEERING PRACTICE ACT.

STATE OF TEXAS
KAYLA R. WOOD
104859
REGISTERED PROFESSIONAL ENGINEER

REVISIONS	DATE
1	
2	
3	
4	

MTG engineers & surveyors
TBPE FIRM F-10164 TBPLS FIRM 10194800
9480 SUMMERHILL RD., P.O. BOX 3166 TEXARKANA, TEXAS 75504
P. 903.838.9393 F. 903.832.1700
www.mtgengineers.com

PROJECT: UNIVERSITY PH IV
DATE: 2/28/14
DESIGNED BY
CHECKED BY
APPROVED BY

ELECTRICAL & LIGHTING PLAN

PHASE IV UNIVERSITY

DEPART. OF ENGINEER & INFRASTRUCTURE
CITY OF TEXARKANA, TEXAS

DRAWING

SHEET 31 OF 50

X:\2011 Projects\116019 University Ave Phase 4, City of Texarkana, TX\05 Engineering Design\2014 Design\Design_07.pro
Wed Mar 12, 2014 9:49AM

GENERAL:

I. SCOPE

Details herein apply to roadway lighting installations bid under the following Specification Items: Roadway Illumination Assemblies, Relocate Roadway Illumination Assemblies, Foundations for Signs, Traffic Signals and Roadway Illumination Assemblies, and Special Specifications relating to roadway lighting. All work, materials and services not shown on the plans which may be necessary for complete and proper construction shall be performed, furnished and installed by the Contractor. Faulty fabrication or poor workmanship in any material, equipment or installation will be considered justification for rejection. Material and installation shall comply with the applicable provisions of the National Electrical Code, National Electrical Manufacturers Association and, when required, Underwriters Laboratories standards. Where manufacturer's provide warranties or guarantees as a customary trade practice, Contractor shall furnish to the State such warranties or guarantees. (1)

The location of poles and fixtures are diagrammatic only and may be shifted by the Engineer to accommodate local conditions. Erection and/or removal of poles and luminaires located near overhead electrical lines shall be accomplished using established industry and utility safety practices and in accordance with laws governing such work. The Contractor shall consult with the appropriate utility company prior to beginning such work.

II. ROADWAY ILLUMINATION ASSEMBLIES

A. General

1. Structural Support Design for Luminaires. Lighting standards shall be designed in accordance with the latest issue of the AASHTO "Standard Specifications for Structural Supports for Highway Signs, Luminaires and Traffic Signals." All poles shall be designed for 80 mph wind loads. An additional 1.3 gust factor shall be applied to the wind loads. For transformer base poles, fabricator shall include transformer base and connecting hardware in design calculations and shop drawing submittals. Manufacturer's shop drawings shall include the ASTM designations for all material to be used. See paragraph II. B. for additional requirements for the transformer base.

2. Slip Joint Poles. Poles may be fabricated in two sections and field-assembled by the lap-joint method. The two sections shall telescope together with a lap length of not less than 1-1/2 times the shaft diameter at the lap joint. The longitudinal seam weld on the outer shaft at the slip joint end shall be a full penetration weld for a minimum of the slip joint length plus 6 inches.

3. Mast Arm Attachments. All poles and attachments shall be structurally designed to support two 12-foot mast arms and luminaires. Poles shall be supplied with mast arm combinations as shown in the plans. All mast arms shall be designed for a 55-pound luminaire having an effective projected area of 1.4 square feet.

4. Minor Damage Repair. The finished pole shall have a smooth, uniform finish free of pits, blisters, or other defects. Scratched, chipped, or damaged areas on galvanized poles and mast arms shall be thoroughly cleaned by wire brushing. The cleaned area shall be painted with two coats of zinc rich paint containing a minimum of 84% metallic zinc.

5. Pole Bonding Means. All shoe base poles, including poles on concrete traffic barriers, shall have a grounding lug with 1/2-13 NC female threads inside the pole near the hand hole, minimum of 3 full threads.

6. Hand Holes. All shoe base poles shall have hand holes with reinforcing frames and covers. The openings on all poles shall be approximately 4 inches x 10 inches located approximately 10 inches from the bottom of the pole and, except for poles mounted on concrete traffic barrier, shall be placed 90 degrees to mast arm unless otherwise noted on the plans. For poles mounted on concrete median barrier, all hand holes shall be on the same side of the median.

7. CTB Poles. Poles installed on concrete traffic barrier shall also meet the requirements of CTB details.

8. J-Hooks. All poles shall be equipped with a J-hook inside the pole, near the top for supporting vertical conductors.

9. Base Plate Bolt Circle. Bolt circles for poles mounted on CTB, see CTBI (4) or SSCB (4). Poles placed on existing bridge brackets or existing foundations, bolt circle shall be coordinated with anchor bolts in place. For other bolt circles, See RID (3).

10. Steel Poles.

a. Steel poles shall be fabricated in accordance with the Item "Steel Structures." Longitudinal seam welds for pole sections shall have 60% minimum penetration, except that weld shall be full penetration within 6 inches of circumferential base plate welds. All welding shall be in accordance with the ANSI/AWS Structural Code D1.1. Two-section poles joined by circumferential welds will not be permitted, unless otherwise shown on the plans. Unless otherwise shown on the plans, poles and hardware shall be galvanized in accordance with Item 445, "Galvanizing".

b. Pole components shall be constructed using the following materials:

Shaft: ASTM A-572 Grade 50 or ASTM A-595 Grade A (50 KSI min. yield) or ASTM A36M50.

Base Plate: ASTM A-27 Grade 65-35 or ASTM A-36.

Mast Arm Connector: ASTM A-27 Grade 65-35.

Mast Arms: Steel pipe ASTM A-53 Grade A or B or ASTM A-501 with 20% elongation in 2 inches or A-513 TY I with minimum 30 KSI yield and 15% elongation in 2 inches.

Pole Cap: Pole cap shall be zinc die-cast, aluminum, or galvanized metal, secured by three stainless steel or galvanized screws.

Pole Hardware: All bolts except mast arm connection bolts shall be stainless steel or standard steel galvanized ASTM A-153 Class C or D, or B-695 Class 50. Mast arm connection bolts shall be ASTM A-325, ASTM A-321 or ASTM A-193 Grade B-7, galvanized as above. Nuts and washers shall be compatible with the bolts and shall be stainless steel or steel, galvanized as above. Lock washers shall be provided on all bolted connections.

11. Aluminum Poles.

a. Aluminum poles shall be fabricated in accordance with "Structural Welding, Aluminum" ANSI/AWS D1.2.

b. Pole components shall be constructed using the following material:

Shaft: ASTM B-221 or B-241 Alloy 6063-T6, ASTM B-209 Alloy 5086-H34, ASTM B-221 Alloy 6005-T5.

Base Flange: ASTM B-26 Alloy 356.0-T6 or ASTM B-108 Alloy A356.0-T6 (Structural strength test required).

Mast Arm Fitting: ASTM B-209 Alloy 6061-T6 or ASTM B-221 Alloy 6005-T5.

Mast Arms: ASTM B-241 Alloy 6061-T6 or Alloy 6063-T6.

Pole Cap: ASTM B-209 Alloy 5086-H32 or ASTM B-108 or B-26 Alloy 356.0-T6.

Bolts: Stainless Steel AISI 300. Bolts threading into aluminum threads shall be treated with anti-seize compound, Never-Seez Compound, Permatex 133K or equal.

12. Alternate material equal to or better than material specified may be substituted with the approval of the Engineer.

13. Installation of high strength bolts. The tightening of nuts on high strength bolts shall be in accordance with the Item "Structural Bolting."

14. (1) Roadway Illumination Assembly poles shall be erected plumb and true. Top of foundation shall be struck level so the pole will be plumb. Shoe base poles may use leveling nuts to plumb pole. Shims and leveling nuts shall not be used under transformer bases. Grout shall not be placed between base plate or flange and the foundation.

15. In each pole, continuous color-coded stranded No. 12 AWG copper Type XHHW or other approved XLP conductors shall be connected to the line side of each ballast.

16. Acorn nuts will not be allowed for attaching pole to transformer base or foundation. Nut covers will not be allowed.

17. Fabrication tolerances shall be as shown on Fabrication Tolerances Table.

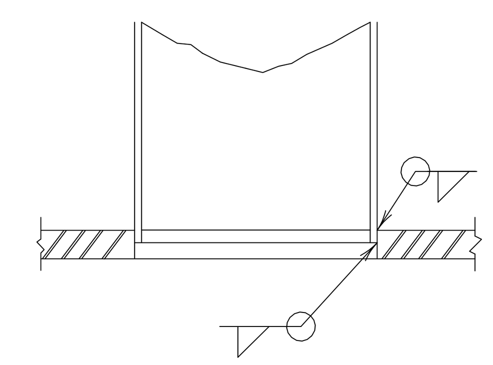

SECTION
POLE SHAFT TO BASE PLATE

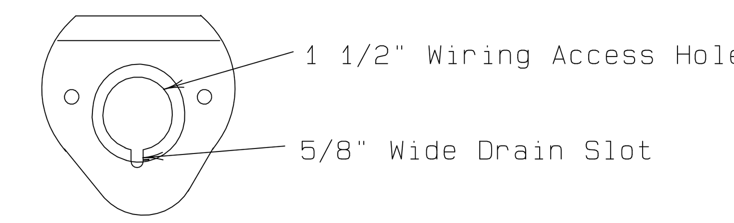

MAST ARM CONNECTOR

Steel Poles Only
Aluminum Pole Connector
Shall Be Clamp-on Type

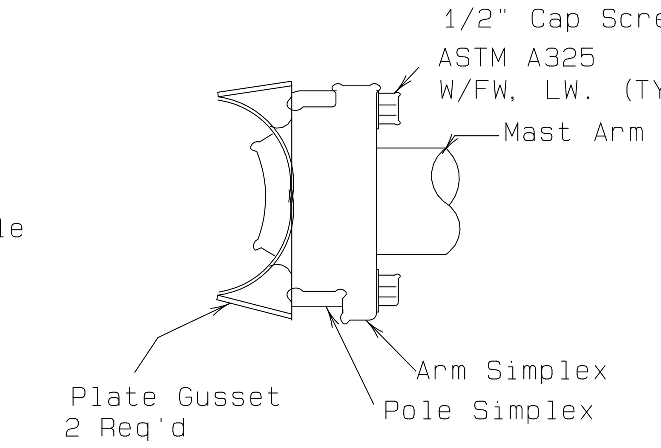

MAST ARM TO POLE
SHAFT CONNECTION

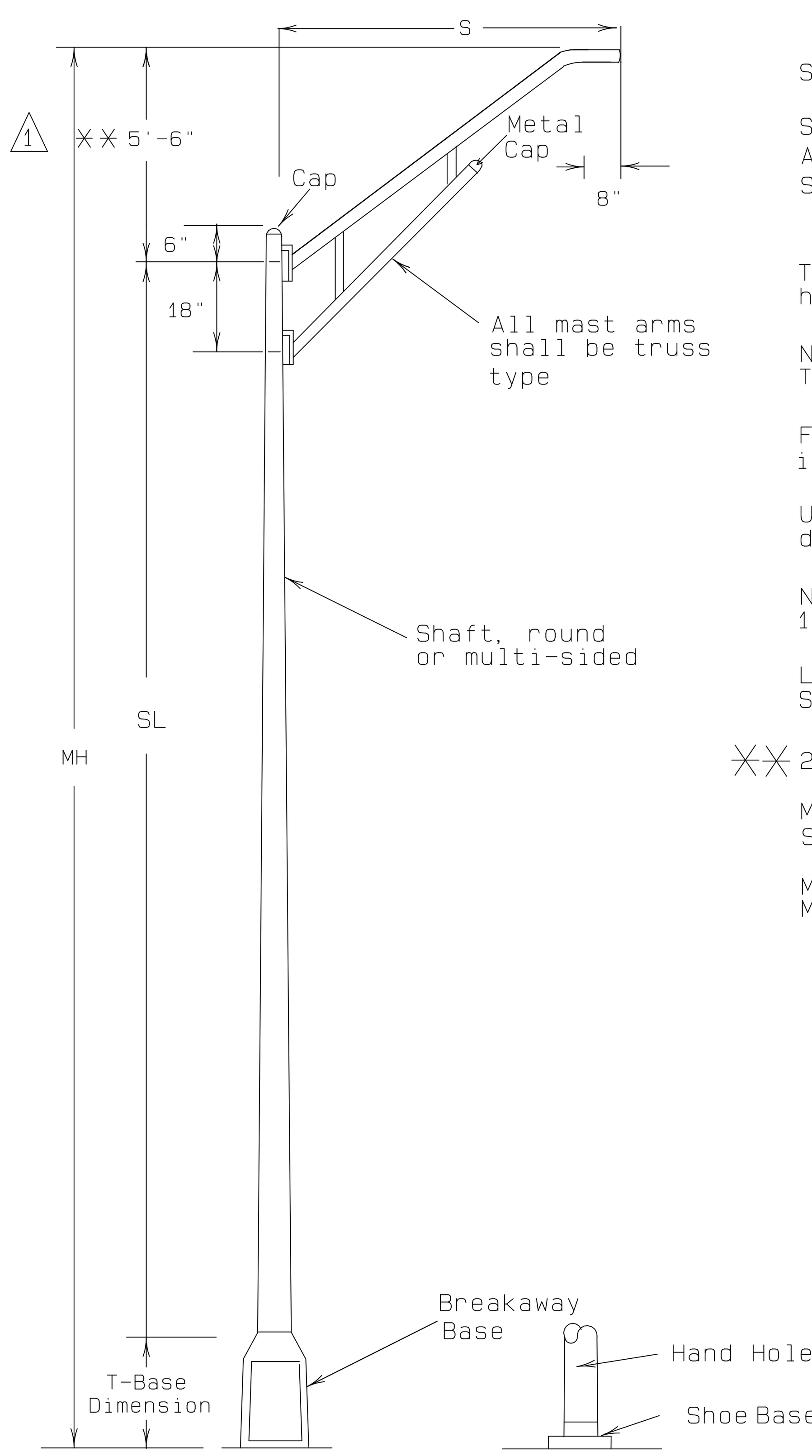

ROADWAY ILLUMINATION ASSEMBLY

EXPLANATION OF ROADWAY ILLUMINAION
ASSEMBLY DESIGNATIONS

(TYPE SA 50 T - 8 - 8) (.4KW) S

SA: Pole and mast arm may be steel or aluminum.
ST: Pole and mast arm must be steel.
AL: Pole and mast arm must be aluminum.
SP: Special (ovalized) steel pole for installing on CTB. See standard sheet CTBI (4).

Two numerical digits denote mounting height in feet.

Next letter denotes type of base, (S-Shoe Base, T-Transformer Base or X-Base, B-Shoe Base Bridge Mount)

First number denotes length of mast arm in feet.

Use of second mast arm is indicated by second dashed number which denotes length in feet.

Next three figures indicate luminaire rating (1 KW= 1000 watts, .4 KW= 400 watts, etc.)

Last letter indicates the type of lamp (M- Mercury, S- High Pressure Sodium, L- Low Pressure Sodium).

✕✕ 2.5' for poles with 4' mast arms.

MH = Mounting Height
SL = Shaft Length
S = Spread (Mast arm length)
MH = SL + 5' + (T-Base dimension)
MH = SL + 5' (Shoe Base)

(1) 10-98: change mast arm rise, rearrange notes;

STANDARD PLANS
TEXAS DEPARTMENT OF TRANSPORTATION
Traffic Operations Division

ROADWAY
ILLUMINATION
DETAILS

RID (1) -98

©TxDOT January 1992

DN: -RS	CK: -KB	DW: -FDN	CK: -RS	NEG NO.:

REVISIONS	STATE DISTRICT	FEDERAL REGION	FEDERAL AID PROJECT	SHEET
5-93 10-93 10-98		6		

COUNTY	CONTROL	SECTION	JOB	HIGHWAY

REVISIONS	DATE
1	
2	
3	
4	

MTG engineers & surveyors
TBPE FIRM NO. F-354
5930 SUMMERHILL RD. | P.O. BOX 3786 TEXARKANA TEXAS 75501
P 903.838.8533 | F 903.832.4700
www.mtgengineers.com

PROJECT UNIVERSITY PH IV
DATE 2/28/14
DESIGNED BY
CHECKED BY
APPROVED BY

ROADWAY ILLUMINATION DETAILS

PHASE IV UNIVERSITY
DEPART. OF ENGINEER & INFRASTRUCTURE
CITY OF TEXARKANA, TEXAS

DRAWING

SHEET 32 OF 50

X:\2011 Projects\116019 University Ave Phase 4, City of Texarkana, TX\05 Engineering Design\2014 Design\Design_07.pro
Wed Mar 12, 2014 9:50AM

II. ROADWAY ILLUMINATION ASSEMBLIES (cont.)

B. Transformer Base

1. Transformer base shall be cast from aluminum, ASTM B-108 or B-26 Alloy 356.0-T6, or other material approved by the Engineer, and shall be furnished with eight 1/2 inch flat washers as recommended by the manufacturer. Transformer base bolt circles (Top and Bottom) shall match bolt circles for poles and foundations shown on RID (3).

2. Transformer base shall be approximately 15-20 inches high and shall have a door approximately 13 inches x 8 inches x 9 1/4 inches or as otherwise approved by the Engineer. Screw or bolts for attachment of door to base shall be stainless steel. Four machine bolts with four nuts, eight 1/2 inch flat washers and four lock washer, galvanized ASTM A-153 Class C or D, or B-695 Class 50, shall be provided with each transformer base for connecting the pole. Bolts shall be ASTM A325 or approved equal. Nuts shall be ASTM A-563 grade DH galvanized. A 1/2-13 NC female threaded grounding lug shall be provided inside the transformer base near the bottom.

3. The X-base shall be made from extruded aluminum channel and aluminum plate. The base breakaway features shall rely on bolt shear and not on bolt torque. Bolt shall have torque controlled break-off hex-head. Bolt shall be Aluminum Association type 2024-T4 aluminum. X-base channel shall be connected with aluminum bolts. Bolt shall be left hand thread and shall not be interchangeable with any other bolt not designed specifically for use with the X-base.

4. All breakaway bases shall meet the breakaway requirements of the AASTHO "Standard Specifications for Structural Supports for Highway Signs, Luminaires and Traffic Signals," latest edition, and shall have been tested by FHWA-approved methods. All bases shall have been structurally tested to meet or exceed the full designed plastic moment capacity of the pole. Certification of the plastic moment load test and FHWA breakaway requirement test of the model of base being furnished shall be submitted with shop drawings. Shop drawings shall show breakaway base model number and manufacturer's name or logo.

5. Bases shall be stamped, incised or by other approved permanent means, marked to show fabricator's name or logo, and model number. Such information shall be placed in a readily seen location, inside or outside the base, but shall not be placed on the door.

6. Doors for transformer bases shall be made of plastic, fiberglass or other non-aluminum material approved by the Engineer. Transformer bases shall be cleaned by grit blast cleaning after heat treatment. Certification by the manufacturer of heat treatment shall be furnished with transformer bases. The certification shall show the metal alloy and temper and that the base meets those requirements, chemical and physical. The certification shall also show the material ASTM specification. Transformer bases shall be cast with a removable tab bar for material testing. Some bars may have been removed by the manufacturer for testing.

C. All Luminaires.

1. The luminaire housing shall be cast or drawn from a non-ferrous alloy and shall be free of cracks and excessive porosity. All nuts, screws, clips, washers and attaching hardware shall be made of stainless steel; steel electro-zinc-plated, minimum thickness 0.0002 inches with olive green drab or yellow chromate conversion coating; steel coated with an acidic chromate-phosphate-binder system primer, top coated with a polytetrafluoroethylene modified silicon primer, bright metallic in color, meeting the requirements of General Motors automotive specification GM 164M; or other approved conversion coatings except that brackets may be made from pre-galvanized steel. All threaded surfaces used in the housing shall be lubricated with a silicone grease.

2. The slipfitter shall securely clamp the luminaire to the mast arm. A positive means of vertical adjustments shall be provided. The refractor or lens shall be clear glass. The optic assembly shall be provided with resilient gaskets and so constructed that a positive seal against weather and other contaminants will be maintained. The latch shall provide a positive means of maintaining closure of the luminaire. The socket shell shall be nickel plated and shall be rigidly attached to a high grade porcelain mogul base which shall extend and enclose the metal shell. A locking means shall be incorporated in the shell of the socket to positively resist the removal of the lamp. Reflectors shall be polished aluminum with Alzak or equal coating and shall not be painted.

3. Mast-arm mounted luminaires shall be provided with a leveling indicator which is clearly visible from the ground. Leveling indicator shall be sensitive to one (1) degree (maximum) changes in position at any point within five (5) degrees (minimum) level position. Unless otherwise directed by the Engineer, mast-arm mounted luminaires will be installed in the level position.

4. Underpass luminaires shall be fused internally. Fuses shall be 10 amp time-delay type.

5. The Contractor may be responsible for fixture testing costs. See Materials and Tests Section test method TEX-1110-T.

6. The Contractor shall furnish six (6) sets of submittals of the luminaire fixture to the Engineer at the project address. These submittals shall be approved by the Engineer before the Contractor begins work.

D. High Pressure Sodium Vapor Luminaires

1. Photometrics

a. The U/P (SPL-CO) (.15KW)S (TY 1) and (TY 2) underpass luminaires shall be 150 watt high pressure sodium, IES TYPE M-C with flat tempered glass lens. The fixtures shall provide a minimum measured intensity of 0.2 footcandle in a rectangular area measuring 120 feet x 30 feet, when mounted 20 feet above the midpoint of either long side of the surface area.

The maximum to minimum horizontal illuminance uniformity ratio shall not exceed 25:1 within the above mentioned rectangular area.

b. The 250-watt mast arm mounted luminaire shall be IES Type full cutoff and, when mounted 40 feet above the midpoint of either long side of a rectangular area 190 feet by 45 feet, shall provide a measured minimum intensity of 0.2 footcandle at any point on the surface of this area. Light intensities measured in footcandles along a line parallel to and 20 feet in from the long side of the previously defined rectangular area above which the luminaire is mounted shall decrease at a rate not to exceed 0.5 footcandle in any 10 foot interval along the aforementioned line from 10 to 90 feet on both sides of the luminaire and shall not be less than 0.3 footcandle at any point along such line.

The maximum to minimum horizontal illuminance uniformity ratio shall not exceed 15:1 within the above mentioned rectangular area.

c. The 400-watt mast arm mounted luminaire shall be IES Type full cutoff and, when mounted 50 foot above the midpoint of either long side of a rectangular area 220 feet by 60 feet, shall provide a measured minimum intensity of 0.2 footcandle at any point on the surface of this area. Light intensities measured in footcandles along a line parallel to and 30 feet in from the long side of the previously defined rectangular area above which the luminaire is mounted shall decrease at a rate not to exceed 0.5 footcandle in any 10 foot interval along the aforementioned line from 10 to 90 feet on both sides of the luminaire and shall not be less than 0.3 footcandle at any point along such line.

The maximum to minimum horizontal illuminance uniformity ratio shall not exceed 15:1 within the above mentioned rectangular area.

d. The luminaires shall meet the photometric requirements shown above, when energized at 100 percent of rated line voltage. Test will be run with the fixture in the level position as indicated on leveling indicator.

Fabrication Tolerances Table

Part	Dimension	Tolerance
Pole Asssembly	Shaft length	± 1"
	I.D. of outside piece of slip fitting pieces	+ 1/8 " - 1/16 "
	O.D. of inside piece of slip fitting pieces	+ 1/32 " - 1/8 "
	Shaft diameter: other	+ 3/16 "
	Out of "round"	1/4 "
	Straightness of shaft	± 1/4 " in 10 ft
	Twist in shaft	4° in 50 ft
	Perpendicular to baseplate	1/8 " in 24"
	Pole centered on baseplate	± 1/4 "
	Location of Attachments	± 1/4 "
Arm Assembly	Arm Length	± 3"
	Arm Rise	± 1 3/4 " in 10 ft
	Arm Diameter	± 3/16 "
	Overall length or width	± 1/4 "
	Thickness	+ 1/4 " - 1/16 "
	Deviation from flat	1/8 " in 12"
	Spacing between holes	± 3/32 "
	Anchor bolt hole size	± 1/16 "
Anchor Bolt	Length	+ 1" - 1/4 "
	Threaded length	+ 1 1/2 " - 1/8 "
	Galvanized length (if required)	+ 8" - 1/4 "
Miscellaneous	Bolt hole spacing	± 1/16 "
	Strut location in truss arms	± 1 1/2 "

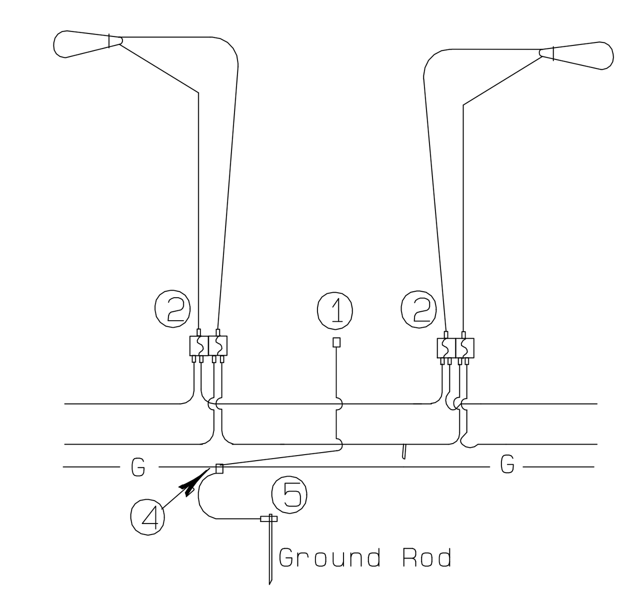

FOR THREE-WIRE CIRCUIT-CENTER GROUNDED

LUMINAIRES SERVED AT 480V ON 240/480 VOLT SERVICE OR LUMINAIRES SERVED AT 240V FOR FOR 120/240 VOLT SERVICE.

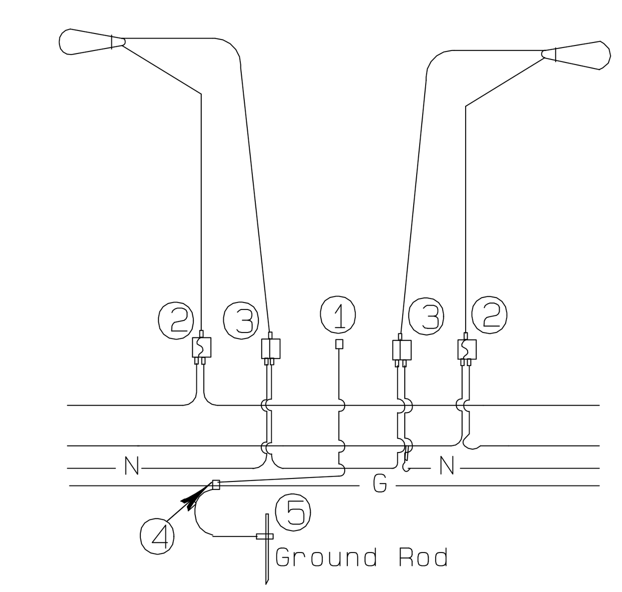

FOUR-WIRE CIRCUIT-CENTER GROUNDED

LUMINAIRES SERVED AT 240V (240/480 VOLT SERVICE)

NOTES:

(1) Pole Bonding Connector Blackburn TTC3 or Weaver TGC3 or equal.

(2) Fused Connector-All electrical connectors for breakaway poles shall be watertight and shall be designed as break-away (Buchannan 65U, Bussmann HEBW, Littelfuse LEB or equal). All fuses shall be time-delay types. 10 Amp (Littelfuse FLQ, Bussman FNQ or equal).

* (3) Un-fused Connector-All electrical connections for neutrals shall be watertight. For breakaway poles, connections shall be designed as breakaway, shall have a white color marking, and shall have a permanently installed solid neutral (Buchannan 20U, Bussmann HET, Littelfuse LET or equal). Dummy/Neutral fuse shall be Bussman NTS-R-3 or equal.

(4) Split Bolt or other connector.

(5) Ground Rod Clamp - Blackburn GG58H, Burndy GKP635, or equal.

*For Transformer Base Poles. On Shoe Base Poles omit un-fused connector for neutral conductor.

1 10-98: clarified T-base washers; mod. fixture requirements; removed two wire diagram; revised breakaway connectors requirements

STANDARD PLANS
TEXAS DEPARTMENT OF TRANSPORTATION
Traffic Operations Division

ROADWAY ILLUMINATION DETAILS

RID(2)-98

©TxDOT January 1992	DN: -RS	CK: -KB	DW: -FDN	CK: -RS	NEG NO.:
REVISIONS	STATE DISTRICT	FEDERAL REGION	FEDERAL AID PROJECT		SHEET
5-93 10-93 10-98		6			
	COUNTY		CONTROL	SECTION	JOB	HIGHWAY

REVISIONS | DATE
1
2
3
4

MTG engineers & surveyors
TBPE FIRM NO. F-354
5930 SUMMERHILL RD. | P.O. BOX 3786 TEXARKANA TEXAS 75501
P 903.838.8533 | F 903.832.4700
www.mtgengineers.com

PROJECT UNIVERSITY PH IV
DATE 2/28/14
DESIGNED BY
CHECKED BY
APPROVED BY

ROADWAY ILLUMINATION DETAILS

PHASE IV UNIVERSITY

DEPART. OF ENGINEER & INFRASTRUCTURE
CITY OF TEXARKANA, TEXAS

DRAWING

SHEET 33 OF 50

X:\2011 Projects\116019 University Ave Phase 4, City of Texarkana, TX\05 Engineering Design\2014 Design\Design_07.pro
Wed Mar 12, 2014 9:50AM

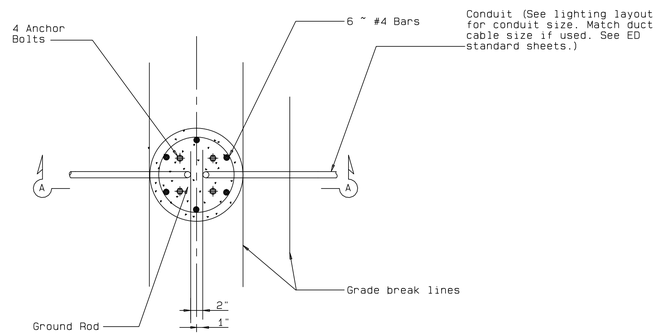

FOUNDATION DETAIL

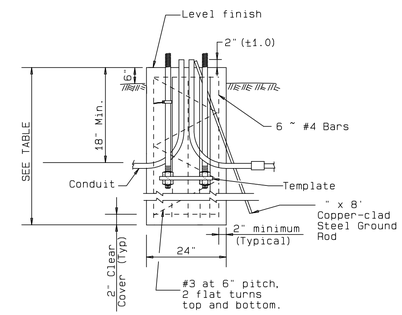

SECTION A-A

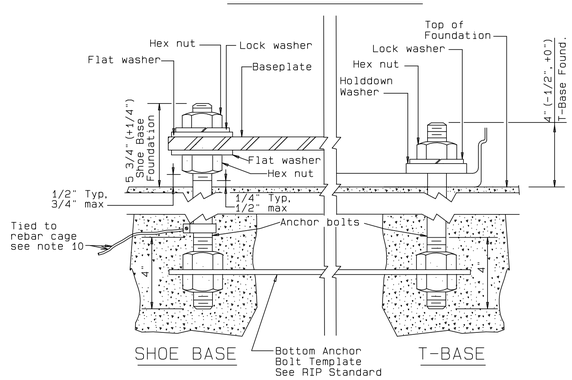

ANCHOR BOLT DETAIL

RECOMMENDED FOUNDATION LENGTHS (See note 1)			
MOUNTING HEIGHT	TEXAS CONE PENETROMETER N Blows/ft		
	10	15	40
≤20 ft.	6'	6'	6'
>20 ft. to 30 ft.	8'	6'	6'
>30 ft. to 40 ft.	8'	8'	6'
>40 ft. to 50 ft.	10'	8'	6'

ANCHOR BOLTS			
POLE MOUNTING HEIGHT	BOLT CIRCLE		ANCHOR BOLT SIZE
	Shoe Base	T-Base	
<40 ft.	13 in.	14 in.	1in.x 30in.
40-50 ft.	15 in.	17 1/4 in.	1 ¼in. x 30in.

BREAKAWAY POLE PLACEMENT (See note 6)	
Roadway Functional Classification	** Pole offset (distance to transformer base, tolerance + 6in.-0in.)
Freeway Mainlanes (roadway with full control of access)	15 ft. (minimum and typical) from lane edge
All curbed, 45 mph or less design speed	2.5 ft. minimum (15 ft. desirable) from curb face
All others	10 ft. minimum* (15 ft. desirable) from lane edge

* or as close to ROW line as is practical

** provide 2/5 of the luminaire mounting height behind the pole for "falling area" to prevent encroachment on the other travel lanes. See design guidelines.

1. "Recommended Foundation Lengths" table is for information purposes only. Foundation lengths shall be as shown on the plans, or as directed by the Engineer. Foundations will be paid for under Item 416, "Drilled Shaft Foundations," unless otherwise shown on the plans.
2. Erect roadway illumination assembly poles plumb and true. Form and level the top 6" of the foundation so the pole will be plumb. Use leveling nuts to plumb shoe base poles. Do not use shims or leveling nuts under transformer bases. Do not grout between baseplate and the foundation.
3. Ensure Class 2A and 2B fit for anchor bolts and nuts. Tap and chase nuts after galvanizing. Anchor bolt body with rolled threads need not be full size.
4. Use appropriate class of concrete as specified in Items 416 and 432.
5. Locate breakaway roadway illumination assemblies as shown in the placement table, unless otherwise dimensioned on the plans. Protect non-breakaway illumination assemblies from vehicular impact (i.e. 2 ft. behind guard rail or mounted on traffic barrier), or located outside the clear zone, except that 2.5 ft. from curb face is minimum desired for light poles on city streets, 45 mph or less, see design guidelines for further information.
6. Use 8 hold down washers on transformer base poles as recommended by the manufacturer and supplied with base.
7. Install a minimum of 2 conduits in each foundation. See lighting layout sheets for locations of foundations with more than 2 conduits. Cap unused conduits in foundations on both ends.
8. Conduit location in foundations is critical for breakaway devices. Place conduits 2 in. apart on centerline as shown.
9. Bond anchor bolt to rebar cage with #6 bare stranded copper conductor. Use listed mechanical connectors rated for embedment in concrete.

THE SEAL APPEARING ON THIS DOCUMENT WAS AUTHORIZED BY KAYLA R. WOOD, P.E. NO. 104859 ON 3/12/14. ALTERATION OF A SEALED DOCUMENT WITHOUT PRIOR NOTIFICATION TO THE RESPONSIBLE ENGINEER IS AN OFFENSE UNDER THE TEXAS ENGINEERING PRACTICE ACT.

STATE OF TEXAS
KAYLA R. WOOD
104859
REGISTERED
PROFESSIONAL ENGINEER

REVISIONS	DATE
1	
2	
3	
4	

MTG engineers & surveyors
TBPE FIRM F-10024-00
TBPLS FIRM 10194-00
9480 SUMMERHILL RD., P.O. BOX 3166
TEXARKANA, TX 75504
P. 903.838.4939 F. 903.832.4700
www.mtgengineers.com

PROJECT: UNIVERSITY PH IV
DATE: 2/28/14
DESIGNED BY
CHECKED BY
APPROVED BY

ROADWAY ILLUMINATION DETAILS

PHASE IV UNIVERSITY

DEPART. OF ENGINEER & INFRASTRUCTURE
CITY OF TEXARKANA, TEXAS

DRAWING

SHEET 34
OF 50

X:\2011 Projects\116019 University Ave Phase 4, City of Texarkana, TX\05 Engineering Design\2014 Design\Design_07.pro
Wed Mar 12, 2014 9:51AM

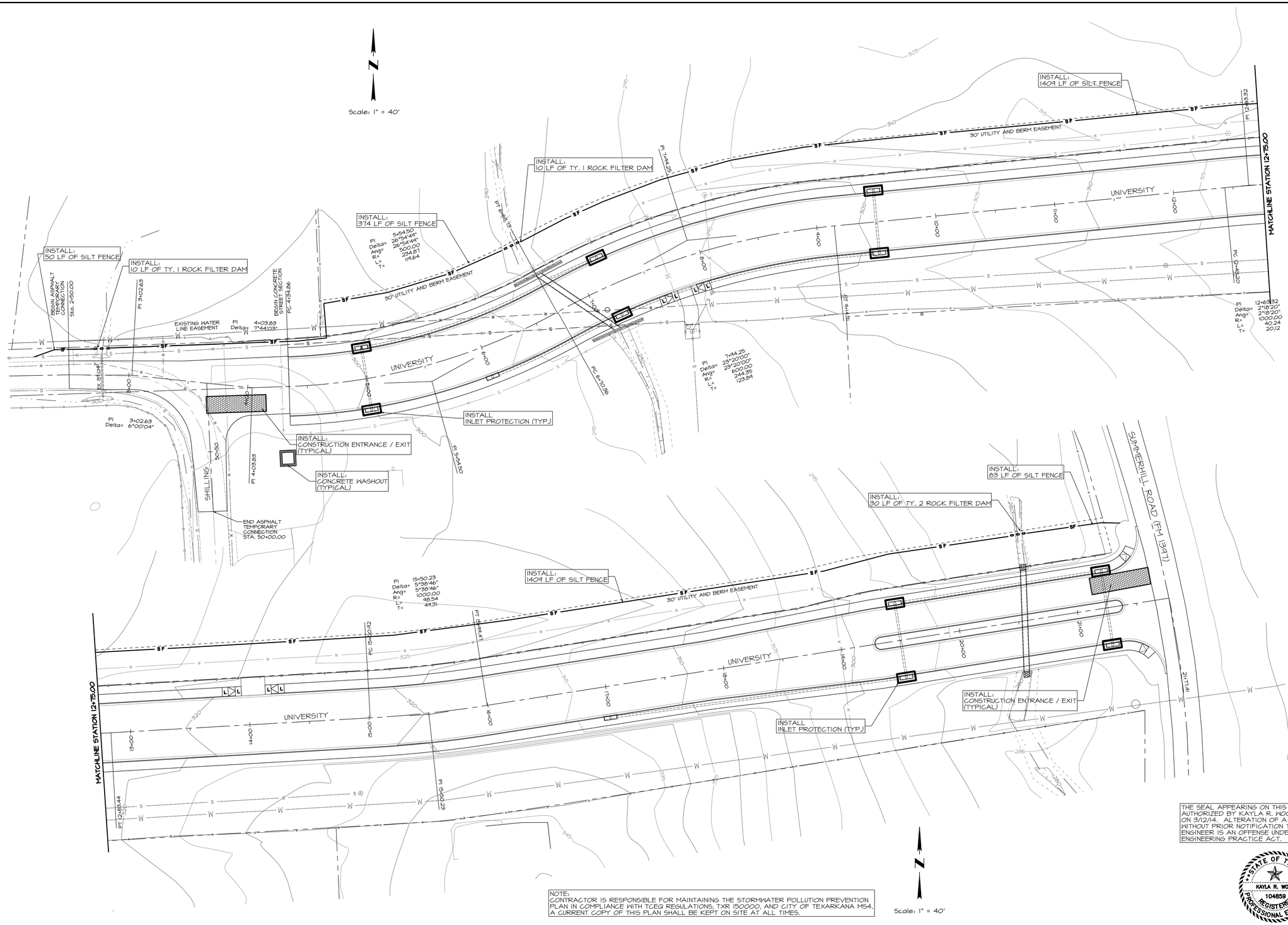

NOTE:
CONTRACTOR IS RESPONSIBLE FOR MAINTAINING THE STORMWATER POLLUTION PREVENTION PLAN IN COMPLIANCE WITH TCEQ REGULATIONS, TXR 150000, AND CITY OF TEXARKANA MS4. A CURRENT COPY OF THIS PLAN SHALL BE KEPT ON SITE AT ALL TIMES.

THE SEAL APPEARING ON THIS DOCUMENT WAS AUTHORIZED BY KAYLA R. WOOD, P.E. NO. 104859 ON 3/12/14. ALTERATION OF A SEALED DOCUMENT WITHOUT PRIOR NOTIFICATION TO THE RESPONSIBLE ENGINEER IS AN OFFENSE UNDER THE TEXAS ENGINEERING PRACTICE ACT.

STATE OF TEXAS
KAYLA R. WOOD
104859
REGISTERED
PROFESSIONAL ENGINEER

REVISIONS	DATE
1	
2	
3	
4	

MTG engineers & surveyors
TBPE FIRM F-10084
TBPLS FIRM 10194
5480 SUMMERHILL RD., P.O. BOX 3166
TEXARKANA, TEXAS 75504
P. 903.838.4939 F. 903.832.1700
www.mtgengineers.com

PROJECT: UNIVERSITY PH IV
DATE: 2/28/14
DESIGNED BY
CHECKED BY
APPROVED BY

EROSION CONTROL PLAN

PHASE IV UNIVERSITY

DEPART. OF ENGINEER & INFRASTRUCTURE
CITY OF TEXARKANA, TEXAS

DRAWING

SHEET 35
OF 50

X:\2011 Projects\116019 University Ave Phase 4, City of Texarkana, TX\05 Engineering Design\2014 Design\Design_07.pro
Wed Mar 12, 2014 9:54AM

SITE DESCRIPTION

PROJECT LIMITS: BETWEEN SHILLING LANE AND SUMMERHILL ROAD (FM 1397)

PROJECT DESCRIPTION: CONSTRUCTION OF A NEW CONCRETE STREET WITH STORM SEWER, WATER AND SANITARY SEWER IMPROVEMENTS.

IMPORTANT DATE: (WHEN CONSTRUCTION BEGINS)

MAJOR SOIL DISTURBING ACTIVITIES: SOIL DISTRUBING ACTIVITIES WILL INCLUDE GRADING, EXCAVATION, AND BACKFILLING PAVEMENT EDGES FOR THE ROADWAY STRUCTURES AND PLACEMENT OF TOPSOIL FOR FINAL SEEDING

IMPORTANT DATES: (WHEN MAJOR SOIL DISTURBING ACTIVITIES ARE ACTIVE)

TOTAL PROJECT AREA: 4.2 ACRES

TOTAL AREA TO BE DISTURBED: 4.2 ACRES

WEIGHTED RUNOFF COEFFICIENT (AFTER CONSTRUCTION): 0.65

EXISTING CONDITION OF SOIL & VEGETATIVE COVER AND % OF EXISTING VEGETATIVE COVER: EXISTING SOIL IS 100% COVERED WITH NATIVE GRASSES AND VEGETATION IN FAIR CONDITION.

NAME OF RECEIVING WATERS: DRAINAGE CHANNELS CARRY THE RUNOFF FROM THIS PROJECT INTO McKINNEY BAYOU.

EROSION AND SEDIMENT CONTROLS

SOIL STABILIZATION PRACTICES:

____ TEMPORARY SEEDING
_X_ PERMANENT PLANTING, SODDING, OR SEEDING
____ MULCHING
____ SOIL RETENTION BLANKET
_X_ BUFFER ZONES
_X_ PRESERVATION OF NATURAL RESOURCES

OTHER: DISTURBED AREAS ON WHICH CONSTRUCTION ACTIVITY HAS CEASED (TEMPORARILY OR PERMANENTLY) SHALL BE STABILIZED WITHIN 14 DAYS UNLESS ACTIVITIES ARE SCHEDULED TO RESUME WITHIN 21 DAYS

IMPORTANT DATES: (WHEN MEASURES ARE INITIATED)

STRUCTURAL PRACTICES:

_X_ SILT FENCES
____ HAY BALES
____ ROCK BERMS
____ DIVERSION, INTERCEPTOR, OR PERIMETER DIKES
____ DIVERSION, INTERCEPTOR, OR PERIMETER SWALES
____ DIVERSION DIKE AND SWALE COMBINATIONS
____ PIPE SLOPE DRAINS
____ PAVED FLUMES
____ ROCK BEDDING AT CONSTRUCTION EXIT
____ TIMBER MATTING AT CONSTRUCTION EXIT
____ CHANNEL LINERS
____ SEDIMENT TRAPS
____ SEDIMENT BASINS
____ STORM INLET SEDIMENT TRAP
_X_ FILTER DAMS
_X_ CURBS AND GUTTERS
_X_ STORM SEWERS
____ VELOCITY CONTROL DEVICES

OTHER:

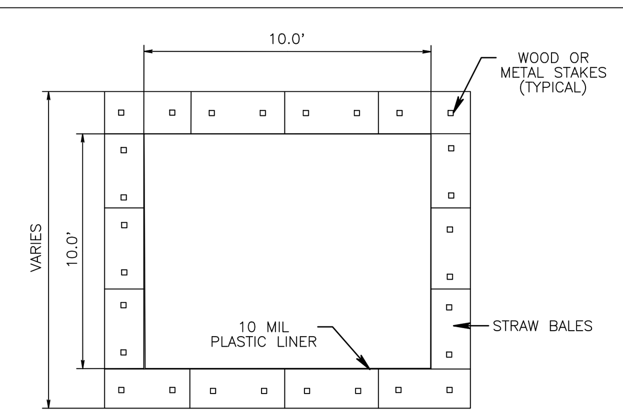

PLAN

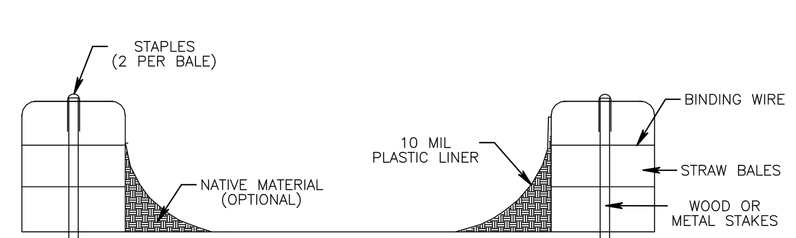

SECTION

TEMPORARY CONCRETE WASHOUT (ABOVE GRADE)

NOTES:

1. NO CONCRETE WASHOUT SHALL BE PLACED WITHIN 50' OF STORM DRAIN, OPEN DITCHES, OR WATER BODIES.
2. WASHOUT FACILITY SHOULD BE PLACED IN A LOCATION THAT IS CONVENIENT FOR CONCRETE TRUCKS.
3. THE CONCRETE WASHOUT SIGN SHALL BE PLACED WITHIN 30 FEET OF THE WASHOUT FACILITY.
4. THE CONCRETE WASHOUT LETTERS SHALL BE A MINIMUM OF 3 INCHES IN HEIGHT.

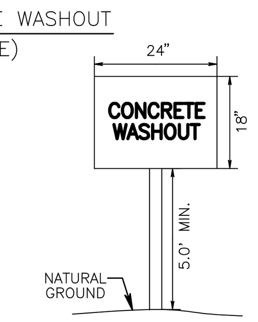

SIGN

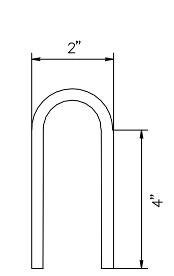

STAPLE

NARRATIVE – SEQUENCE OF CONSTRUCTION (STORM WATER MANAGEMENT) ACTIVITIES:

1. PLACE PERIMETER CONTROLS (SILT FENCE AND FILTER DAMS)
2. PERFORM PERMANENT CONSTRUCTION ACTIVITIES
3. PERFORM STABILIZATION (PERMANENT PLANTING) AS FINAL GRADES ARE ACHIEVED AND SITE CLEAN–UP.

IMPORTANT DATES: (WHEN TEMPORARY OR PERMANENT CONSTRUCTION ACTIVITIES CEASE)

STORM WATER MANAGEMENT: STORM WATER DRAINAGE WILL BE PROVIDED BY STORM SEWER AND DITCHES.

OTHER EROSION AND SEDIMENT CONTROLS:

MAINTENANCE: ALL EROSION AND SEDIMENT CONTROLS WILL BE MAINTAINED IN GOOD WORKING ORDER. IF A REPAIR IS NECESSARY, IT WILL BE DONE AT THE EARLIEST DATE POSSIBLE BUT NO LATER THAN 7 CALENDER DAYS AFTER THE SURROUNDING EXPOSED GROUND HAS DRIED SUFFICIENTLY TO PREVENT FURTHER DAMAGE FROM HEAVY EQUIPMENT.

INSPECTION: AN INSPECTION WILL BE PERFORMED BY A PROJECT INSPECTOR EVERY 2 WEEKS AS WELL AS AFTER EVERY HALF INCH OR MORE OF RAIN. AN INSPECTION AND MAINTENANCE REPORT WILL BE MADE PER EACH INSPECTION. BASED ON THE INSPECTION RESULTS, THE CONTROLS SHALL BE REVISED PER THE INSPECTION REPORT.

WASTE MATERIALS: NO CONSTRUCTION WASTE MATERIAL. WILL BE BURIED ON SITE. DISPOSAL OF WASTE MATERIALS SHALL MEET ALL STATE AND LOCAL SOLID WASTE MANAGEMENT REGULATIONS.

HAZARDOUS WASTE (INCLUDING SPILL REPORTING): AT A MINIMUM, ANY PRODUCTS IN THE FOLLOWING CATAGORIES ARE CONSIDERED TO BE HAZARDOUS: PAINTS, ACIDS FOR CLEANING MASONRY SURFACES, CLEANING SOLVENTS, ASPHALT PRODUCTS, CHEMICAL ADDITIVES FOR SOIL STABILIZATION, CONCRETE CURING COMPOUNDS AND ADDITIVES OR MOTOR OIL. IN THE EVENT OF A SPILL WHICH MAY BE HAZARDOUS, THE APPROPRIATE AGENCIES SHALL BE CONTACTED IMMEDIATELY.

SANITARY WASTE: ALL SANITARY WASTE WILL BE DISPOSED OF IN ACCORDANCE WITH ALL STATE AND LOCAL REGULATIONS.

OFFSITE VEHICLE TRACKING:

_X_ HAUL ROADS DAMPENED FOR DUST CONTROL
____ LOADED HAUL TRUCKS TO BE COVERED WITH TARPAULIN
_X_ EXCESS DIRT ON ROAD REMOVED DAILY
____ STABILIZED CONSTRUCTION ENTRANCE

OTHER:

REMARKS: DISPOSAL AREAS, STOCKPILES, AND HAUL ROADS SHALL BE CONSTRUCTED IN A MANNER THAT WILL MINIMIZE AND CONTROL THE AMOUNT OF SEDIMENT THAT MAY ENTER RECEIVING WATERS. DISPOSAL AREAS SHALL NOT BE LOCATED IN ANY WETLAND, WATERBODY OR STREAMBED.
CONSTRUCTION STAGING AREAS AND VEHICLE MAINTENANCE AREAS SHALL BE CONSTRUCTED BY THE CONTRACTOR IN A MANNER TO MINIMIZE THE RUNOFF OF POLLUTANTS.
ALL WATERWAYS SHALL BE CLEARED AS SOON AS PRACTICAL OF TEMPORARY EMBANKMENT, TEMPORARY BRIDGES, MATTING FALSEWORK, PILING, DEBRIS OR OTHER OBSTRUCTIONS PLACED DURING CONSTRUCTION OPERATIONS THAT ARE NOT A PART OF THE FINISHED WORK.
THE CONTRACTOR WILL BE REQUIRED TO CONTAIN WASH WATER FROM CONCRETE TRUCKS IN A MANNER THAT WILL PREVENT SAME FROM ENTERING ANY WATERWAY.

NOTES: CONTRACTOR SHALL CONDUCT ALL SITE ACTIVITIES IN COMPLIANCE WITH TPDES GENERAL PERMIT NO. TXR–150000 INCLUDING SUBMITTING NOTICE OF INTENT AND NOTICE OF TERMINATION DOCUMENTS TO TCEQ AND POSTING OF SITE NOTICES.
THE CONTRACTOR IS RESPONSIBLE FOR ENSURING THAT ALL SUBCONTRACTORS ARE AWARE AND COMPLY WITH ALL COMPONENTS OF THE SW3P.

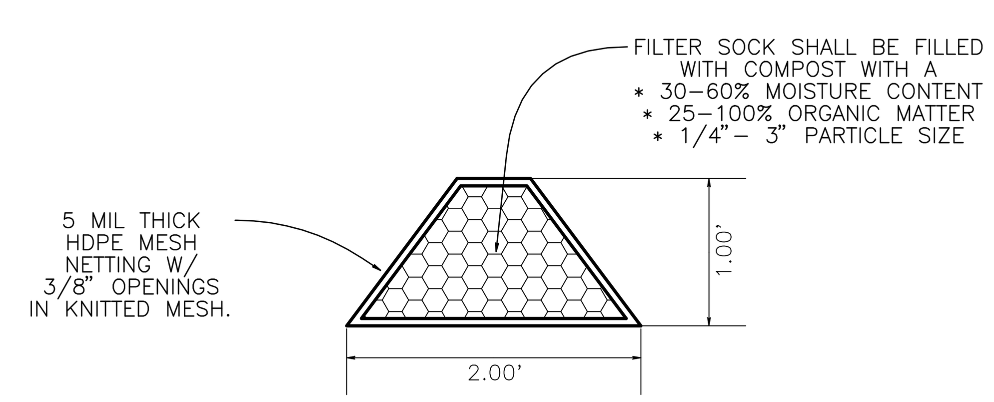

FILTER SOCK DETAIL
NOT TO SCALE

SOIL TYPES:

THE EXISTING SOILS ARE PREDOMINATELY A VERY FINE SANDY LOAM AND EYLAU–URBAN LAND COMPLEX. THESE SOILS TYPICALLY RANGE FROM 0% TO 3% SLOPE.

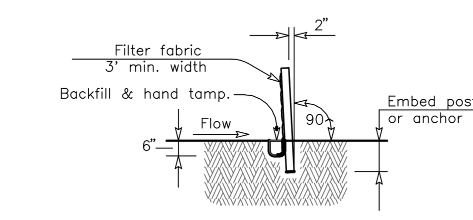

SILT FENCE SECTION
NOT TO SCALE

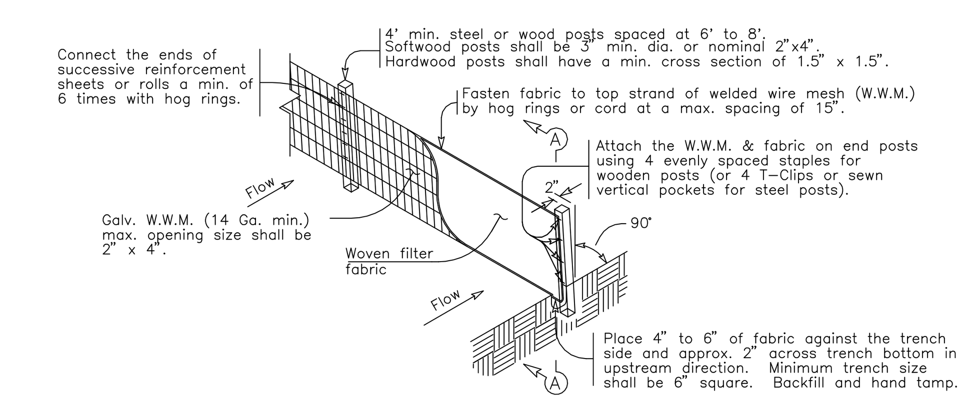

TEMPORARY SEDIMENT CONTROL FENCE

— SF —

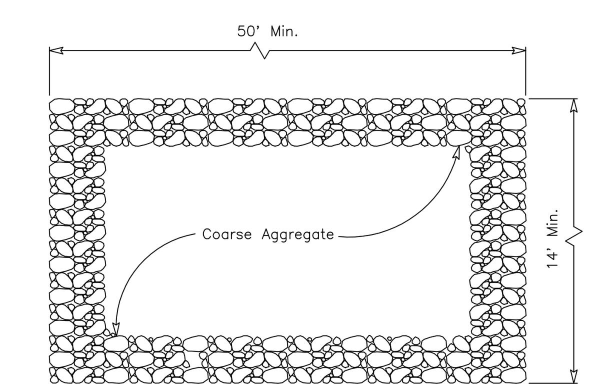

PLAN

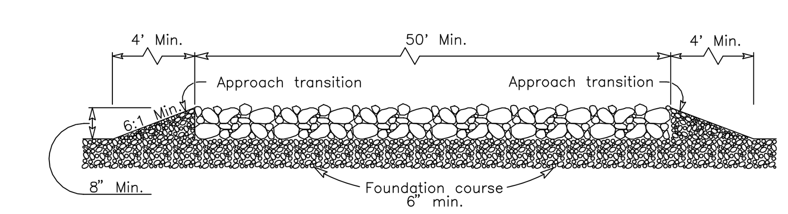

PROFILE

CONSTRUCTION EXIT (TYPE 1)

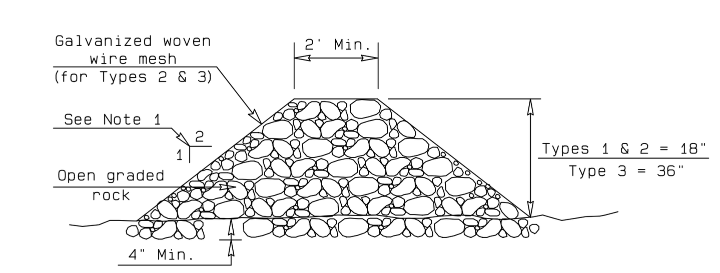

SECTION C–C

1. Side slopes should be 2:1 or flatter. Dams within the safety zone shall have sideslopes of 6:1 or flatter.
2. Filter dams should be embedded a minimum of 4" into existing ground.

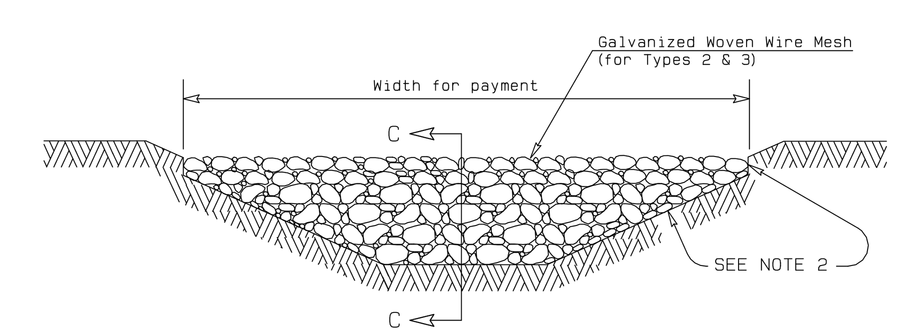

FILTER DAM AT CHANNEL SECTIONS

THE SEAL APPEARING ON THIS DOCUMENT WAS AUTHORIZED BY KAYLA R. WOOD, P.E. NO. 104859 ON 3/12/14. ALTERATION OF A SEALED DOCUMENT WITHOUT PRIOR NOTIFICATION TO THE RESPONSIBLE ENGINEER IS AN OFFENSE UNDER THE TEXAS ENGINEERING PRACTICE ACT.

STATE OF TEXAS
KAYLA R. WOOD
104859
REGISTERED
PROFESSIONAL ENGINEER

REVISIONS | DATE
1
2
3
4

MTG engineers & surveyors
TBPE FIRM NO. F-354
5930 SUMMERHILL RD. | P.O. BOX 3786
TEXARKANA TEXAS 75501
P 903.838.8533 | F 903.832.4700
www.mtgengineers.com

PROJECT UNIVERSITY PH IV
DATE 2/28/14
DESIGNED BY
CHECKED BY
APPROVED BY

EROSION CONTROL DATA SHEET

PHASE IV UNIVERSITY

DEPART. OF ENGINEER & INFRASTRUCTURE
CITY OF TEXARKANA, TEXAS

DRAWING

SHEET 36
OF 50

X:\2011 Projects\116019 University Ave Phase 4, City of Texarkana, TX\05 Engineering Design\2014 Design\Design_07.pro
Wed Mar 12, 2014 9:55AM

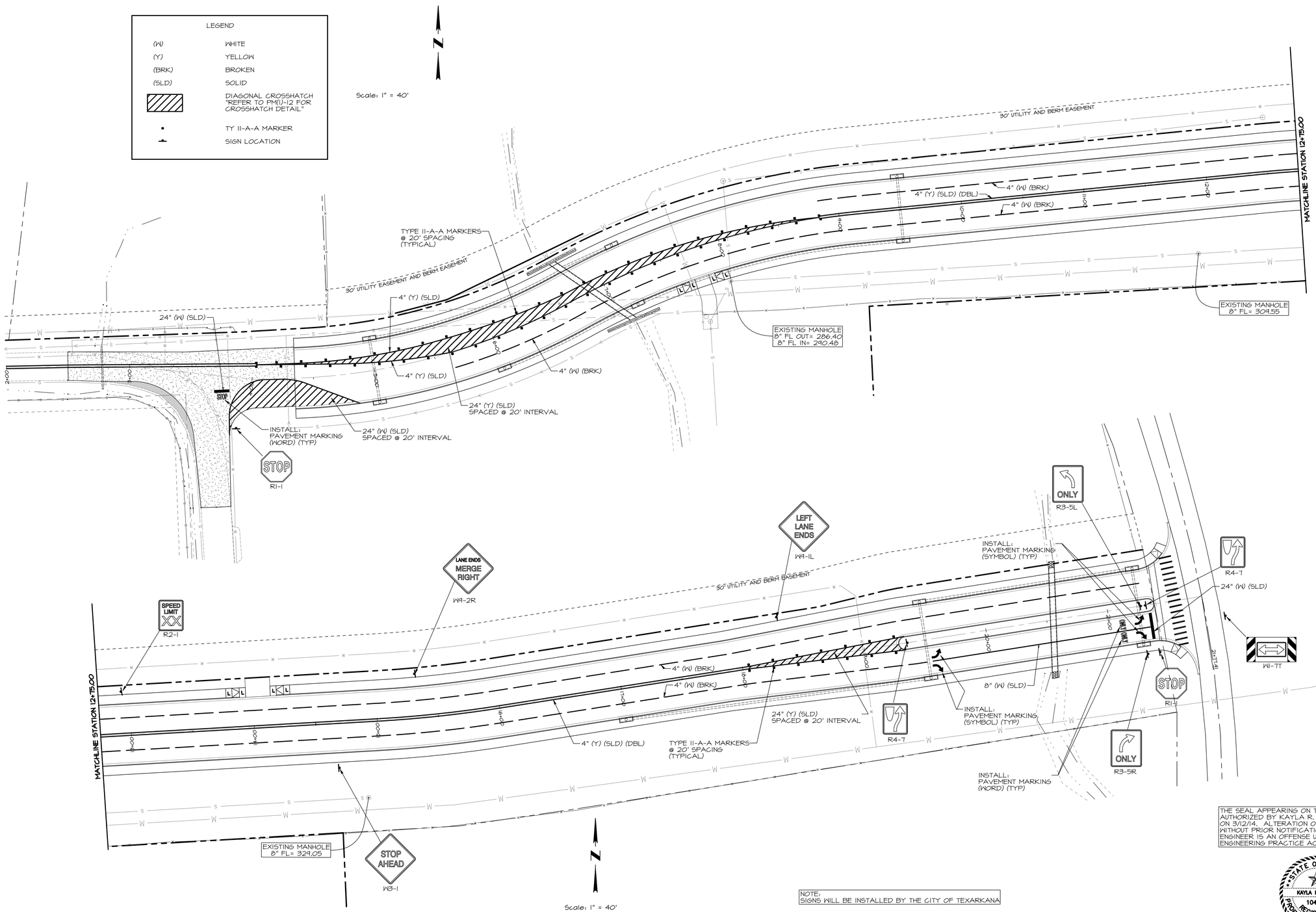

NOTE:
SIGNS WILL BE INSTALLED BY THE CITY OF TEXARKANA

THE SEAL APPEARING ON THIS DOCUMENT WAS AUTHORIZED BY KAYLA R. WOOD, P.E. NO. 104859 ON 3/12/14. ALTERATION OF A SEALED DOCUMENT WITHOUT PRIOR NOTIFICATION TO THE RESPONSIBLE ENGINEER IS AN OFFENSE UNDER THE TEXAS ENGINEERING PRACTICE ACT.

STATE OF TEXAS
KAYLA R. WOOD
104859
REGISTERED PROFESSIONAL ENGINEER

REVISIONS	DATE
1	
2	
3	
4	

MTG engineers & surveyors
TBPE FIRM F-1439
TBPLS FIRM 10194004
9480 SUMMERHILL RD., P.O. BOX 3166
TEXARKANA, TEXAS 75504
P. 903.838.4939 F. 903.832.1700
www.mtgengineers.com

PROJECT: UNIVERSITY PH IV
DATE: 2/28/14
DESIGNED BY:
CHECKED BY:
APPROVED BY:

SIGNAGE AND STRIPING PLAN

PHASE IV UNIVERSITY

DEPART. OF ENGINEER & INFRASTRUCTURE
CITY OF TEXARKANA, TEXAS

DRAWING

SHEET 37 OF 50

X:\2011 Projects\116019 University Ave Phase 4, City of Texarkana, TX\05 Engineering Design\2014 Design\Design_07.pro
Wed Mar 12, 2014 9:55AM

DISCLAIMER: The use of this standard is governed by the "Texas Engineering Practice Act". No warranty of any kind is made by TxDOT for any purpose whatsoever. TxDOT assumes no responsibility for the conversion of this standard to other formats or for incorrect results or damages resulting from its use.

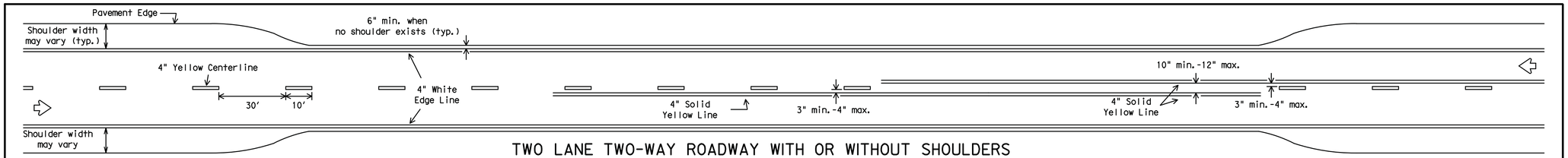

TWO LANE TWO-WAY ROADWAY WITH OR WITHOUT SHOULDERS

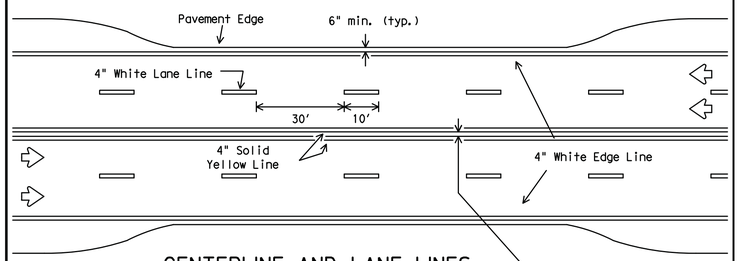

CENTERLINE AND LANE LINES
FOUR LANE TWO-WAY ROADWAY
WITH OR WITHOUT SHOULDERS

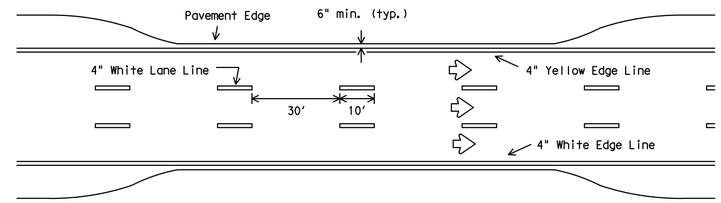

EDGE LINE AND LANE LINES
ONE-WAY ROADWAY
WITH OR WITHOUT SHOULDERS

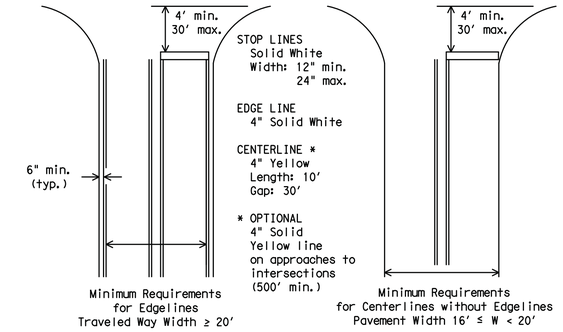

GUIDE FOR PLACEMENT OF STOP LINES,
EDGE LINE & CENTERLINE
Based on Traveled Way and Pavement Widths for Undivided Highways

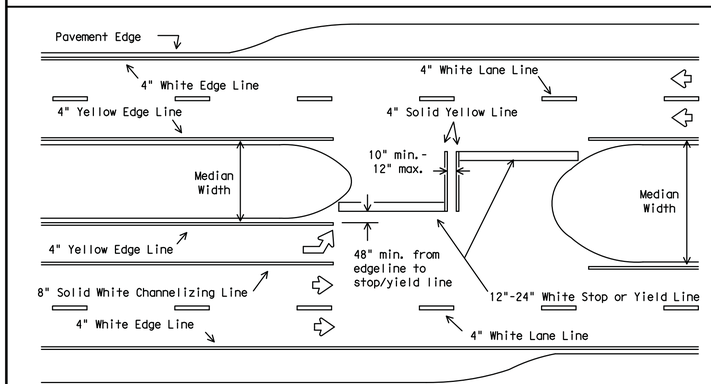

All medians shall be field measured to determine the location of necessary striping. Stop/Yield bars and centerlines shall be placed when the median width is greater than 30 ft. The median width is defined as the area between two roadways of a divided highway measured from edge of traveled way to edge of traveled way. The median excludes turn lanes. The median width might be different between intersections, interchanges and of opposite approaches of the same intersection. The narrow median width will be the controlling width to determine if markings are required.

FOUR LANE DIVIDED ROADWAY INTERSECTIONS

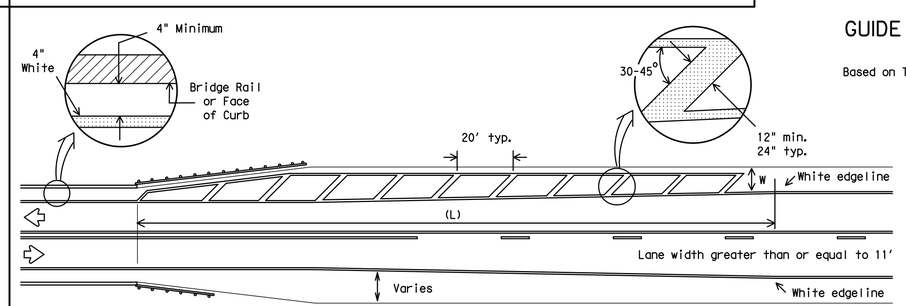

NOTES:

1. No-passing zone on bridge approach is optional but if used, it shall be a minimum 500 feet long.
2. For crosshatching length (L) see Table 1.
3. The width of the offset (W) and the required crosshatching width is the full shoulder width in advance of the bridge.
4. The crosshatching is not required if delineators or barrier reflectors are used along the structure.
5. For guard fence details, refer elsewhere in the plans.

ROADWAYS WITH REDUCED SHOULDER
WIDTHS ACROSS BRIDGE OR CULVERT

TABLE 1 - TYPICAL LENGTH (L)

Posted Speed *	Formula
≤ 40	$L = \frac{WS^2}{60}$
≥ 45	L=WS

* 85th Percentile Speed may be used on roads where traffic speeds normally exceed the posted speed limit. Crosshatching length should be rounded up to nearest 5 foot increment.

L=Length of Crosshatching (FT.) W=Width of Offset (FT.)
S=Posted Speed (MPH)

EXAMPLES:

An 8 foot shoulder in advance of a bridge reduces to 4 feet on a 70 MPH roadway. The length of the cross-hatching should be:

$L = 8 \times 70 = 560$ ft.

A 4 foot shoulder in advance of a bridge reduces to 2 feet on a 40 MPH roadway. The length of the cross-hatching should be:

$L = 4(40)^2 / 60 = 106.67$ ft. rounded to 110 ft.

GENERAL NOTES

1. Edgeline striping shall be as shown in the plans or as directed by the Engineer. The edgeline should typically be placed a minimum of 6 inches from the edge of pavement. This distance may vary due to pavement raveling or other conditions. Edgelines are not required in curb and gutter sections of roadways.
2. The traveled way includes only that portion of the roadway used for vehicular travel and not the parking lanes, sidewalks, berms and shoulders. The traveled ways shall be measured from the inside of edgeline to inside of edgeline of a two lane roadway.

MATERIAL SPECIFICATIONS	
PAVEMENT MARKERS (REFLECTORIZED)	DMS-4200
EPOXY AND ADHESIVES	DMS-6100
BITUMINOUS ADHESIVE FOR PAVEMENT MARKERS	DMS-6130
TRAFFIC PAINT	DMS-8200
HOT APPLIED THERMOPLASTIC	DMS-8220
PERMANENT PREFABRICATED PAVEMENT MARKINGS	DMS-8240

All pavement marking materials shall meet the required Departmental Material Specifications as specified by the plans.

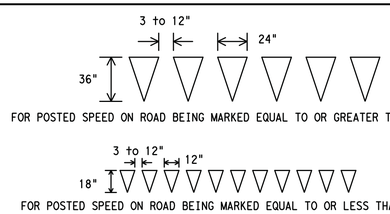

YIELD LINES

Texas Department of Transportation
Traffic Operations Division

TYPICAL STANDARD
PAVEMENT MARKINGS

PM(1)-12

©TxDOT November 1978

DN: TXDOT	CK: TXDOT	DW: TXDOT	CK: TXDOT
CONT	SECT	JOB	HIGHWAY
DIST		COUNTY	SHEET NO.

REVISIONS
8-95 2-12
5-00
8-00
3-03
22A

DATE:
FILE:

X:\2011 Projects\116019 University Ave Phase 4, City of Texarkana, TX\05 Engineering Design\2014 Design\Design_07.pro
Thu Mar 6, 2014 9:03AM

REVISIONS | DATE
1
2
3
4

MTG engineers & surveyors
TBPE FIRM F-1804
TBPLS FIRM 10194000
9480 SUMMERHILL RD., P.O. BOX 3166
TEXARKANA, TEXAS 75504
P. 903.838.4939 F. 903.832.1700
www.mtgengineers.com

PROJECT UNIVERSITY PH IV
DATE 2/28/14
DESIGNED BY
CHECKED BY
APPROVED BY

TYPICAL STANDARD PAVEMENT MARKINGS

PHASE IV UNIVERSITY
DEPART. OF ENGINEER & INFRASTRUCTURE
CITY OF TEXARKANA, TEXAS

DRAWING
SHEET 38 OF 50

REFLECTIVE RAISED PAVEMENT MARKERS FOR VEHICLE POSITIONING GUIDANCE

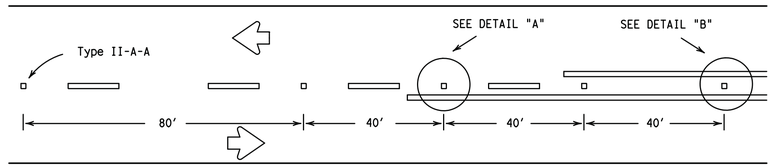

CENTERLINE FOR ALL TWO LANE ROADWAYS

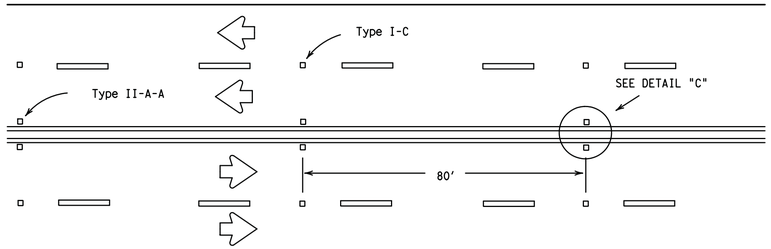

CENTERLINE & LANE LINES FOR FOUR LANE TWO-WAY HIGHWAYS

Raised pavement marker Type I-C, clear face toward normal traffic, shall be placed on 80-foot centers.

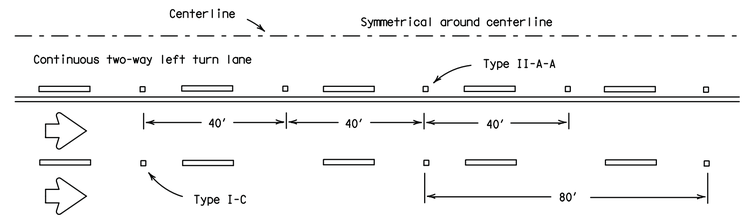

CENTERLINE AND LANE LINES FOR TWO-WAY LEFT TURN LANE

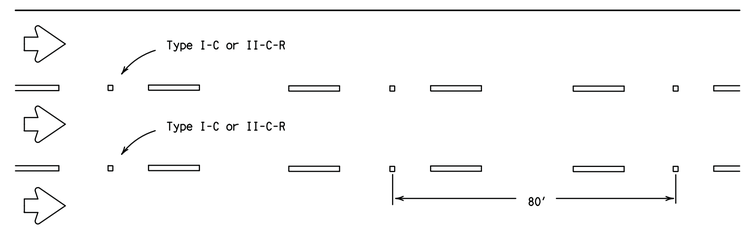

LANE LINES FOR ONE-WAY ROADWAY (NON-FREEWAY FACILITIES)

Raised pavement markers Type II-C-R shall have clear face toward normal traffic and red face toward wrong-way traffic.

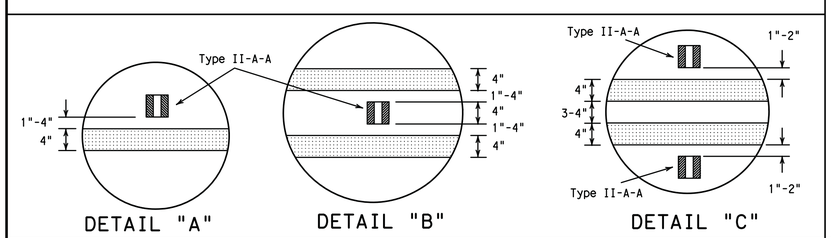

DETAIL "A" DETAIL "B" DETAIL "C"

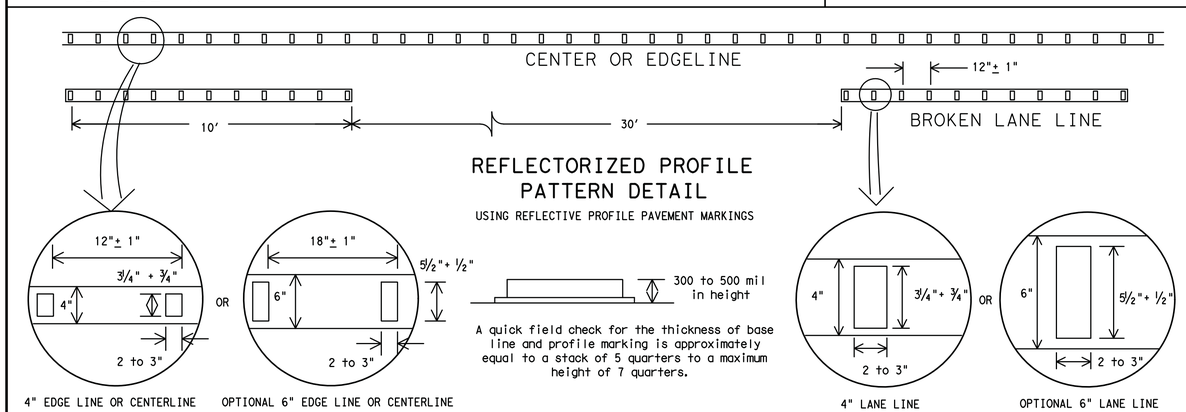

REFLECTORIZED PROFILE PATTERN DETAIL

USING REFLECTIVE PROFILE PAVEMENT MARKINGS

4" EDGE LINE OR CENTERLINE — OPTIONAL 6" EDGE LINE OR CENTERLINE — 4" LANE LINE — OPTIONAL 6" LANE LINE

A quick field check for the thickness of base line and profile marking is approximately equal to a stack of 5 quarters to a maximum height of 7 quarters.

NOTE:
Profile markings shall not be placed on roadways with a posted speed limit of 45 MPH or less.

GENERAL NOTES

1. All raised pavement markers placed in broken lines shall be placed in line with and midway between the stripes.
2. On concrete pavements the raised pavement markers should be placed to one side of the longitudinal joints.

MATERIAL SPECIFICATIONS	
PAVEMENT MARKERS (REFLECTORIZED)	DMS-4200
EPOXY AND ADHESIVES	DMS-6100
BITUMINOUS ADHESIVE FOR PAVEMENT MARKERS	DMS-6130
TRAFFIC PAINT	DMS-8200
HOT APPLIED THERMOPLASTIC	DMS-8220
PERMANENT PREFABRICATED PAVEMENT MARKINGS	DMS-8240

All pavement marking materials shall meet the required Departmental Material Specifications as specified by the plans.

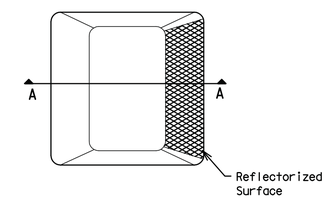

Type I (Top View)

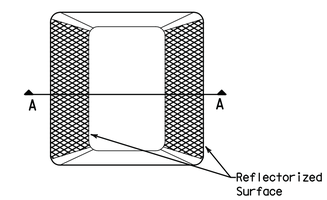

Type II (Top View)

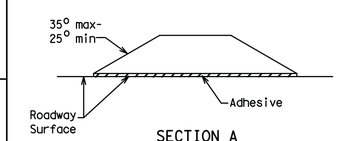

SECTION A

RAISED PAVEMENT MARKERS

Texas Department of Transportation
Traffic Operations Division

POSITION GUIDANCE USING RAISED MARKERS REFLECTORIZED PROFILE MARKINGS

PM(2)-12

© TxDOT April 1977

DN: TXDOT	CK: TXDOT	DW: TXDOT	CK: TXDOT
CONT	SECT	JOB	HIGHWAY
DIST		COUNTY	SHEET NO.

REVISIONS
4-92 2-10
5-00 2-12
8-00
2-08
22B

DISCLAIMER: The use of this standard is governed by the "Texas Engineering Practice Act". No warranty of any kind is made by TxDOT for any purpose whatsoever. TxDOT assumes no responsibility for the conversion of this standard to other formats or for incorrect results or damages resulting from its use.

DATE:
FILE:

REVISIONS — DATE
1
2
3
4

MTG engineers & surveyors
TBPE FIRM F-1094
TBPLS FIRM 10064500
9480 SH 6 BRYAN RD., P.O. BOX 3166
BRYAN, TEXAS 77805-3166
P. 979.268.0293 F. 979.268.0921
www.mtgengineers.com

PROJECT UNIVERSITY PH IV
DATE 2/28/14
DESIGNED BY
CHECKED BY
APPROVED BY

TYPICAL STANDARD PAVEMENT MARKINGS

PHASE IV UNIVERSITY
DEPART. OF ENGINEER & INFRASTRUCTURE
CITY OF TEXARKANA, TEXAS

DRAWING
SHEET 39 OF 50

X:\2011 Projects\116019 University Ave Phase 4, City of Texarkana, TX\05 Engineering Design\2014 Design\Design_07.pro
Thu Mar 6, 2014 9:03AM

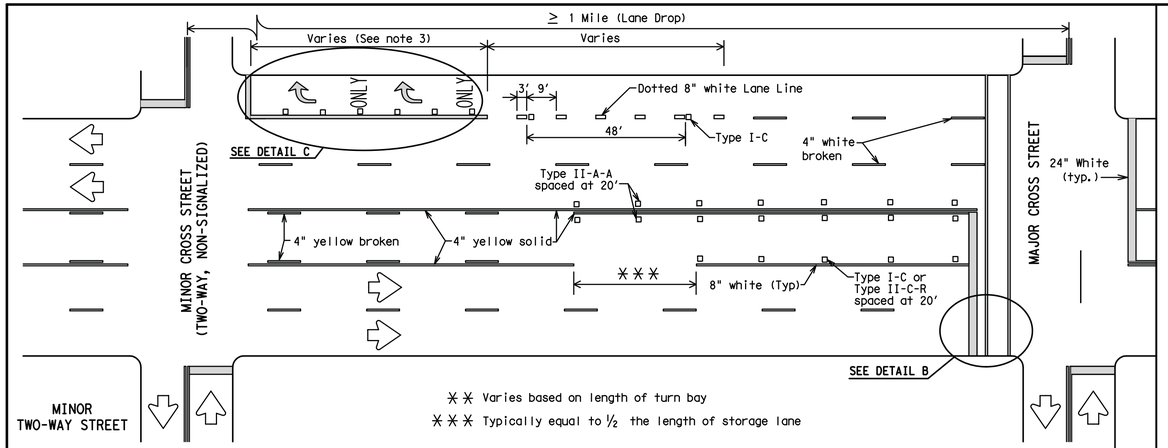

TYPICAL TWLTL AT TWO-WAY CROSS STREET AND RIGHT TURN LANE DROP

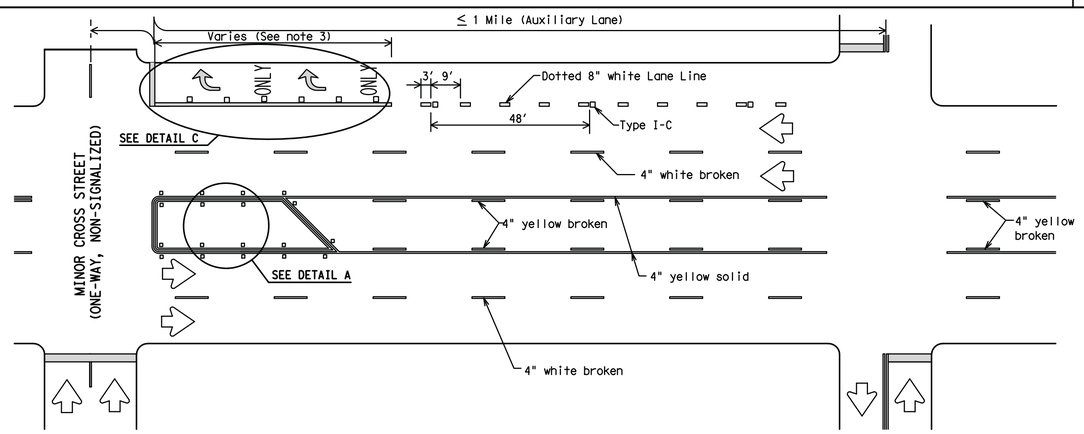

TYPICAL TWLTL AT ONE-WAY STREET AND RIGHT TURN AUXILIARY LANE

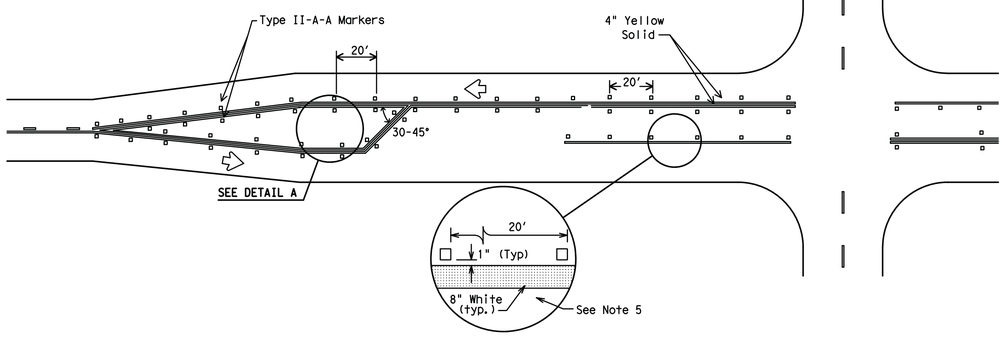

TYPICAL TWO-LANE HIGHWAY INTERSECTION WITH LEFT TURN BAYS

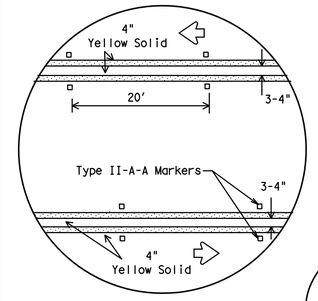

DETAIL A

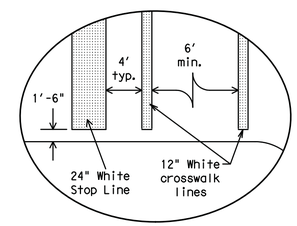

Final placement of Stop Bar and Crosswalk shall be approved by the Engineer in the field.

DETAIL B

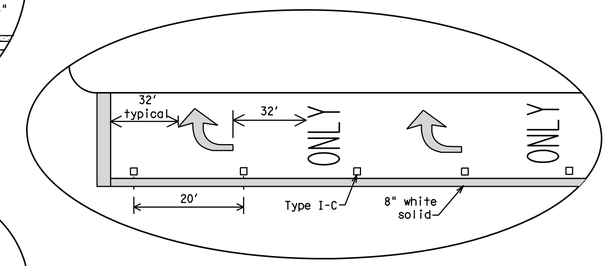

DETAIL C

MATERIAL SPECIFICATIONS	
PAVEMENT MARKERS (REFLECTORIZED)	DMS-4200
EPOXY AND ADHESIVES	DMS-6100
BITUMINOUS ADHESIVE FOR PAVEMENT MARKERS	DMS-6130
TRAFFIC PAINT	DMS-8200
HOT APPLIED THERMOPLASTIC	DMS-8220
PERMANENT PREFABRICATED PAVEMENT MARKINGS	DMS-8240

All pavement marking materials shall meet the required Departmental Material Specifications as specified by the plans.

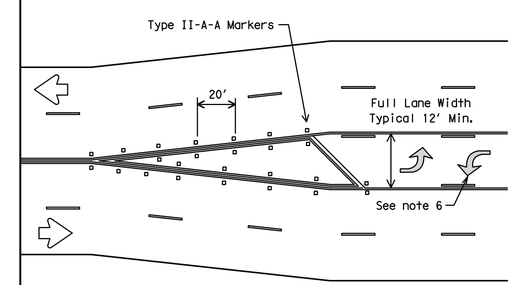

TYPICAL TRANSITION FOR TWLTL AND DIVIDED HIGHWAY

GENERAL NOTES

1. Refer elsewhere in plans for additional RPM placement and details.
2. Lane use word and arrow markings shall be used where through lanes approaching an intersection become mandatory turn lanes. Lane use word and arrow markings should be used in auxiliary lanes of substantial length. Lane use arrow markings or word and arrow markings may be used in other lanes and turn bays for emphasis. Details for words and arrows as shown in the Standard Highway Sign Designs for Texas.
3. When lane used word and arrow markings are used, two sets of arrows should be used if the length of the bay is greater than 180 feet. When a single lane use arrow or word and arrow marking is used for a short turn lane, it should be located at or near the upstream end of the full-width turn lane.
4. Other crosswalk paterns as shown in the "Texas Manual on Uniform Traffic Control Devices" may be used.
5. Raised pavement marker Type I-C with undivided highways, flush medians and two way left turn lanes. Raised pavement marker Type II-C-R with divided highways and raised medians.
6. A two-way left-turn (TWLT) lane-use arrow pavement marking should be used at or just downstream from the beginning of a two-way left-turn lane within a corridor. Repeating the marking after each intersection or dedicated turn bay is not required unless stated elsewhere in the plans.

Texas Department of Transportation
Traffic Operations Division

PAVEMENT MARKINGS FOR TWO-WAY LEFT TURN LANES DIVIDED HIGHWAYS AND RURAL LEFT TURN BAYS

PM(3)-12

© TxDOT April 1998

DN: TXDOT	CK: TXDOT	DW: TXDOT	CK: TXDOT
CONT	SECT	JOB	HIGHWAY
DIST		COUNTY	SHEET NO.

REVISIONS
5-00 2-12
8-00
3-03
2-10

22C

DISCLAIMER: The use of this standard is governed by the "Texas Engineering Practice Act". No warranty of any kind is made by TxDOT for any purpose whatsoever. TxDOT assumes no responsibility for the conversion of this standard to other formats or for incorrect results or damages resulting from its use.

DATE:
FILE:

X:\2011 Projects\116019 University Ave Phase 4, City of Texarkana, TX\05 Engineering Design\2014 Design\Design_07.pro
Thu Mar 6, 2014 9:04AM

REVISIONS | DATE
1
2
3
4

MTG engineers & surveyors
TBPE FIRM F-1439
TBPLS FIRM 10018100
9480 SUMMERHILL RD., P.O. BOX 3166
TEXARKANA, TEXAS 75504
P: 903.838.4939 F: 903.832.4700
www.mtgengineers.com

PROJECT UNIVERSITY PH IV
DATE 2/28/14
DESIGNED BY
CHECKED BY
APPROVED BY

TYPICAL STANDARD PAVEMENT MARKINGS

PHASE IV UNIVERSITY
DEPART. OF ENGINEER & INFRASTRUCTURE
CITY OF TEXARKANA, TEXAS

DRAWING
SHEET 40 OF 50

Packet Pg. 92

5.2.c

Attachment: Exhibit "B" Phase IV TAMU East Approach Street Construction Project Plans (1076 : Res. No. 2014-042 Phase IV TAMU East Approach Street Construction Project)

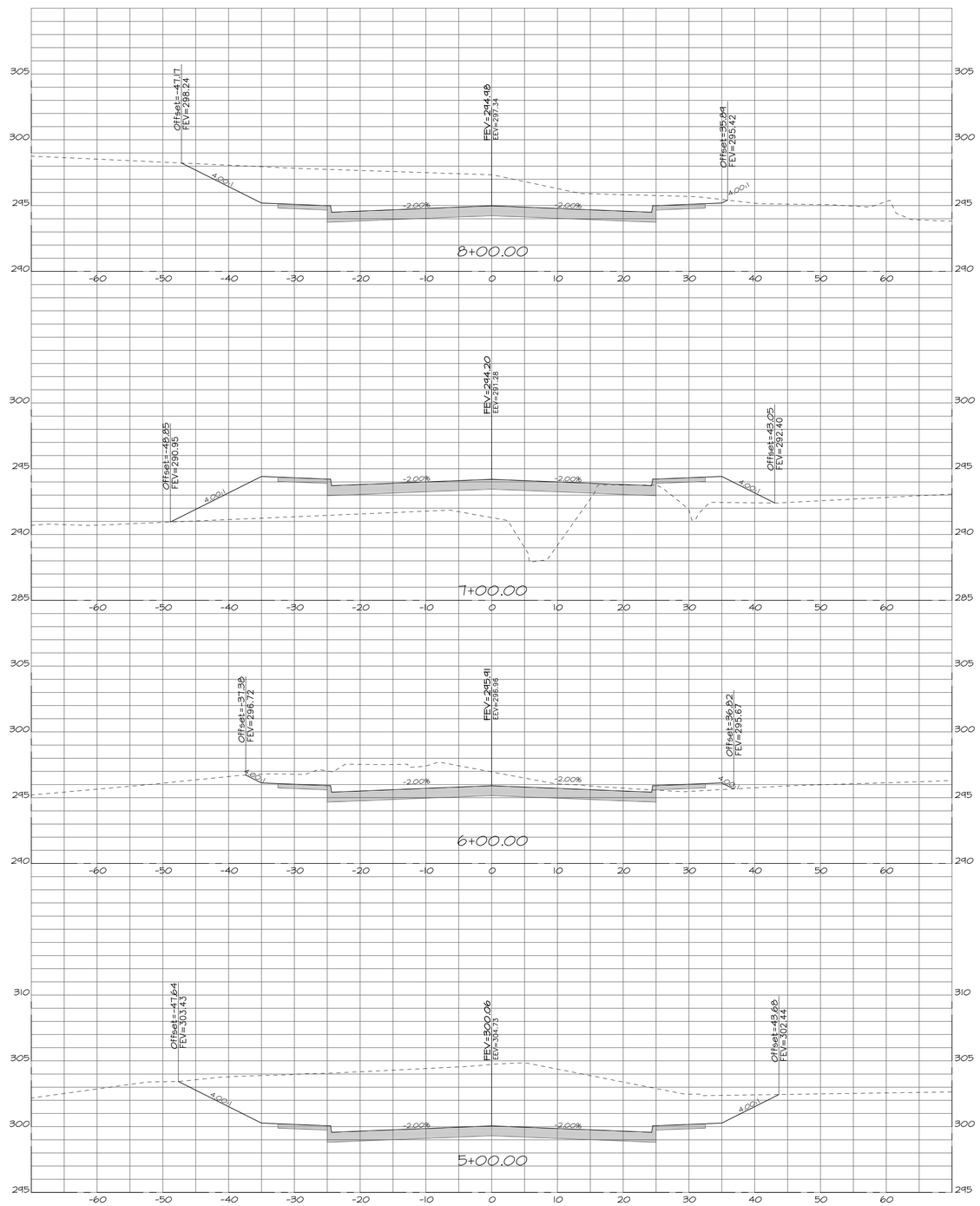

THE SEAL APPEARING ON THIS DOCUMENT WAS AUTHORIZED BY KAYLA R. WOOD, P.E. NO. 104859 ON 3/12/14. ALTERATION OF A SEALED DOCUMENT WITHOUT PRIOR NOTIFICATION TO THE RESPONSIBLE ENGINEER IS AN OFFENSE UNDER THE TEXAS ENGINEERING PRACTICE ACT.

STATE OF TEXAS
KAYLA R. WOOD
104859
REGISTERED PROFESSIONAL ENGINEER

REVISIONS | DATE
1
2
3
4

MTG engineers & surveyors
TBPE FIRM F-1704
TBPLS FIRM 10194004
9480 SH-6 BRYAN RD., P.O. BOX 3166
NAVASOTA, TEXAS 77868
P. 409.828.4033 F. 409.828.4100
www.mtgengineers.com

PROJECT: UNIVERSITY PH IV
DATE: 2/28/14
DESIGNED BY
CHECKED BY
APPROVED BY

X-SECTIONS

PHASE IV UNIVERSITY

DEPART. OF ENGINEER & INFRASTRUCTURE
CITY OF TEXARKANA, TEXAS

DRAWING
SHEET 41
OF 50

X:\2011 Projects\116019 University Ave Phase 4, City of Texarkana, TX\05 Engineering Design\2014 Design\Design_07.pro
Wed Mar 12, 2014 9:56AM

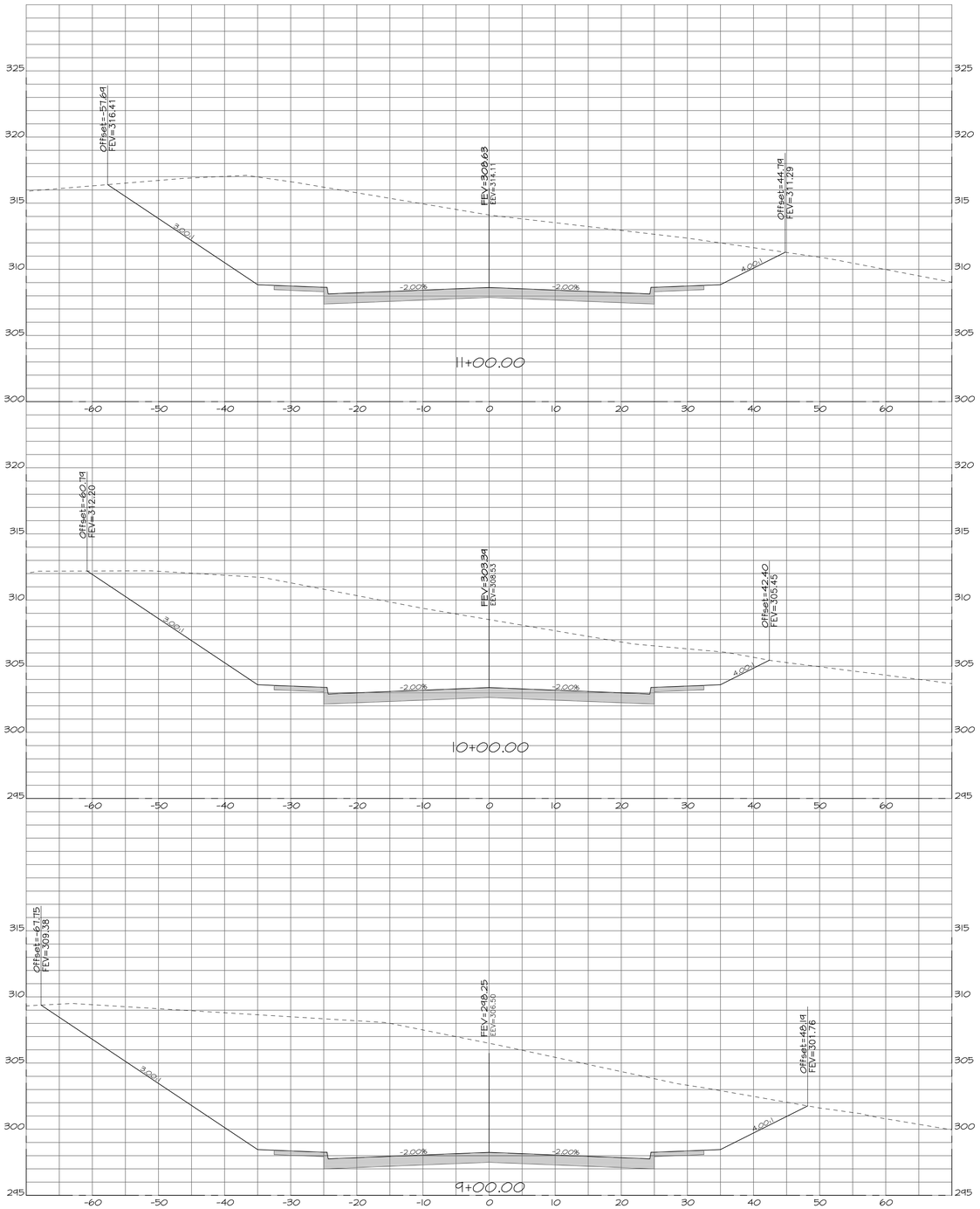

THE SEAL APPEARING ON THIS DOCUMENT WAS AUTHORIZED BY KAYLA R. WOOD, P.E. NO. 104859 ON 3/12/14. ALTERATION OF A SEALED DOCUMENT WITHOUT PRIOR NOTIFICATION TO THE RESPONSIBLE ENGINEER IS AN OFFENSE UNDER THE TEXAS ENGINEERING PRACTICE ACT.

STATE OF TEXAS
KAYLA R. WOOD
104859
REGISTERED
PROFESSIONAL ENGINEER

REVISIONS | DATE
1
2
3
4

MTG engineers & surveyors
TBPE FIRM F-1904
TBPLS FIRM 10194004
9480 GLADERILL RD., P.O. BOX 3166
TEXARKANA, TEXAS 75504
P. 903.838.4939 F. 903.832.4700
www.mtgengineers.com

PROJECT: UNIVERSITY PH IV
DATE: 2/28/14
DESIGNED BY
CHECKED BY
APPROVED BY

X-SECTIONS

PHASE IV UNIVERSITY
DEPART. OF ENGINEER & INFRASTRUCTURE
CITY OF TEXARKANA, TEXAS

DRAWING
SHEET 42
OF 50

X:\2011 Projects\116019 University Ave Phase 4, City of Texarkana, TX\05 Engineering Design\2014 Design\Design_07.pro
Wed Mar 12, 2014 9:57AM

Packet Pg. 94

5.2.c

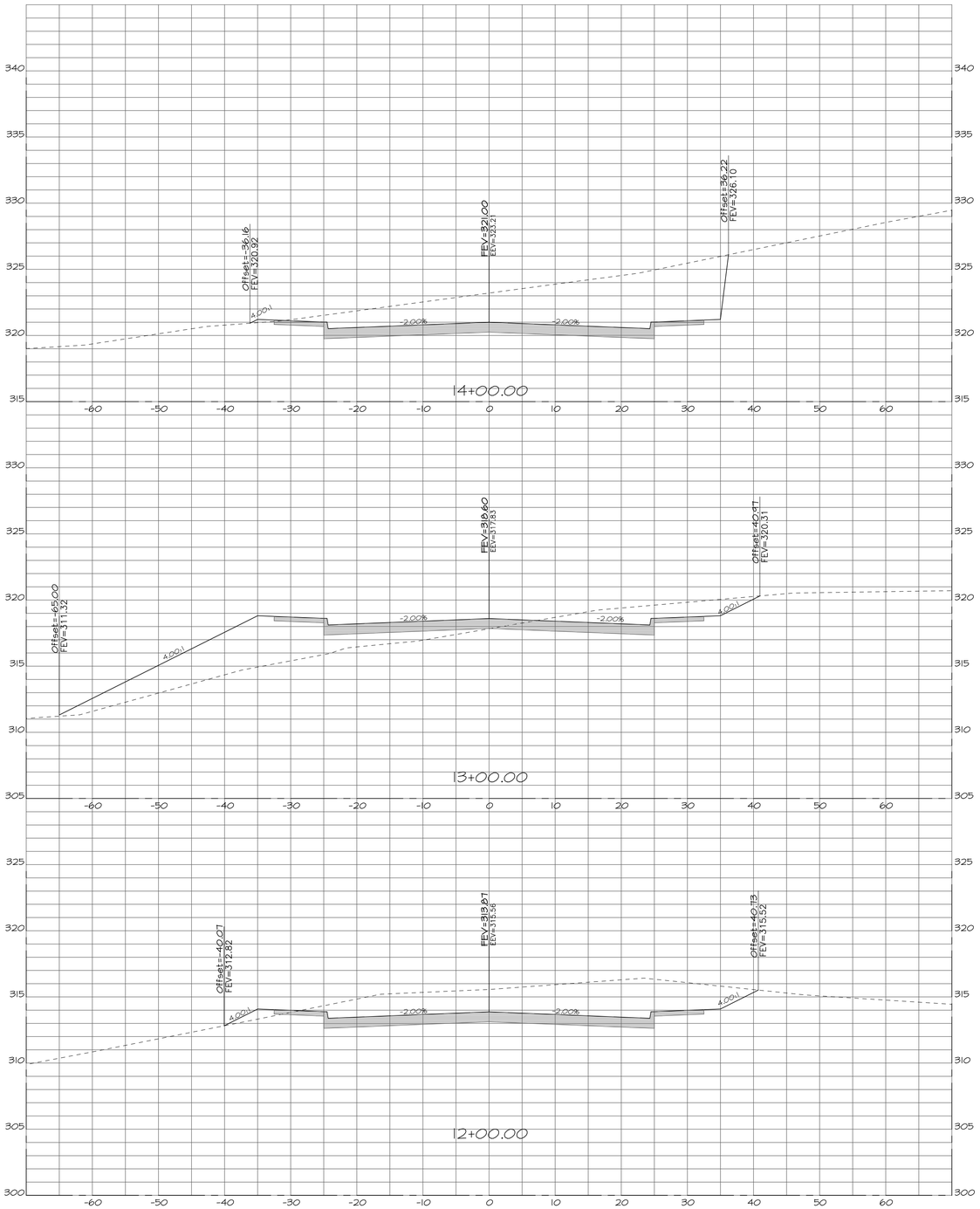

THE SEAL APPEARING ON THIS DOCUMENT WAS AUTHORIZED BY KAYLA R. WOOD, P.E. NO. 104859 ON 3/12/14. ALTERATION OF A SEALED DOCUMENT WITHOUT PRIOR NOTIFICATION TO THE RESPONSIBLE ENGINEER IS AN OFFENSE UNDER THE TEXAS ENGINEERING PRACTICE ACT.

STATE OF TEXAS
KAYLA R. WOOD
104859
REGISTERED
PROFESSIONAL ENGINEER

REVISIONS | DATE
1
2
3
4

MTG engineers & surveyors
TBPE FIRM F-1704
TBPLS FIRM 10194300
9480 SH-6 BRYAN RD., P.O. BOX 3166
NACOGDOCHES, TX 75964
P: 936.468.0093 F: 409.560.4700
www.mtgengineers.com

PROJECT: UNIVERSITY PH IV
DATE: 2/28/14
DESIGNED BY
CHECKED BY
APPROVED BY

X-SECTIONS

PHASE IV UNIVERSITY

DEPART. OF ENGINEER & INFRASTRUCTURE
CITY OF TEXARKANA, TEXAS

DRAWING
SHEET 43
OF 50

X:\2011 Projects\116019 University Ave Phase 4, City of Texarkana, TX\05 Engineering Design\2014 Design\Design_07.pro
Wed Mar 12, 2014 9:57AM

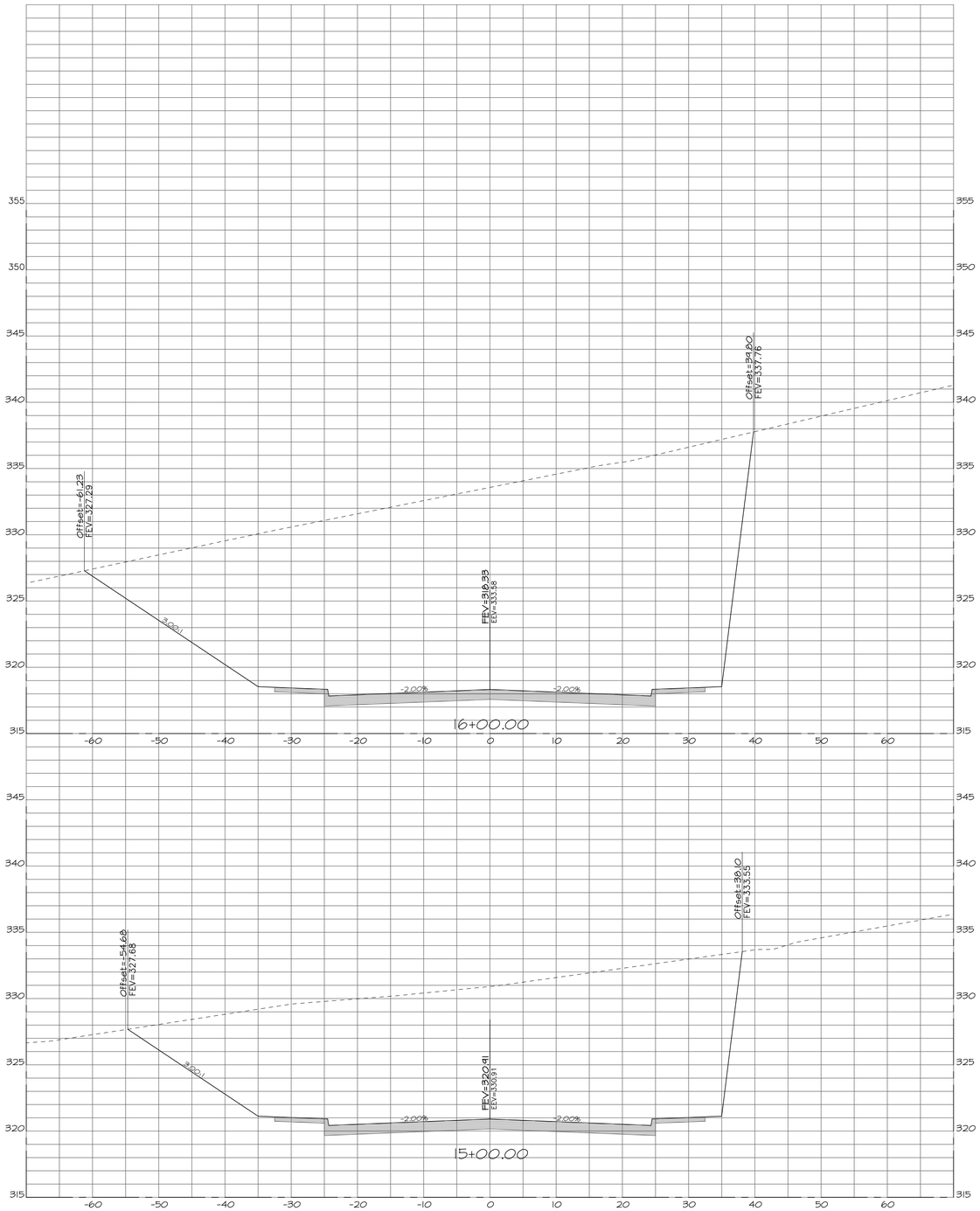

THE SEAL APPEARING ON THIS DOCUMENT WAS AUTHORIZED BY KAYLA R. WOOD, P.E. NO. 104859 ON 3/12/14. ALTERATION OF A SEALED DOCUMENT WITHOUT PRIOR NOTIFICATION TO THE RESPONSIBLE ENGINEER IS AN OFFENSE UNDER THE TEXAS ENGINEERING PRACTICE ACT.

STATE OF TEXAS
KAYLA R. WOOD
104859
REGISTERED
PROFESSIONAL ENGINEER

REVISIONS | DATE
1
2
3
4

MTG engineers & surveyors
TBPE FIRM F-10704
TBPLS FIRM 10194004
24180 SUN-ERSHILL RD., P.O. BOX 3166
NEW CANEY, TEXAS 77357
P. 281.399.4993 F. 409.267.4700
www.mtgengineers.com

PROJECT UNIVERSITY PH IV
DATE 2/28/14
DESIGNED BY
CHECKED BY
APPROVED BY

X-SECTIONS

PHASE IV UNIVERSITY

DEPART. OF ENGINEER & INFRASTRUCTURE
CITY OF TEXARKANA, TEXAS

DRAWING
SHEET 44
OF 50

X:\2011 Projects\116019 University Ave Phase 4, City of Texarkana, TX\05 Engineering Design\2014 Design\Design_07.pro
Wed Mar 12, 2014 9:57AM

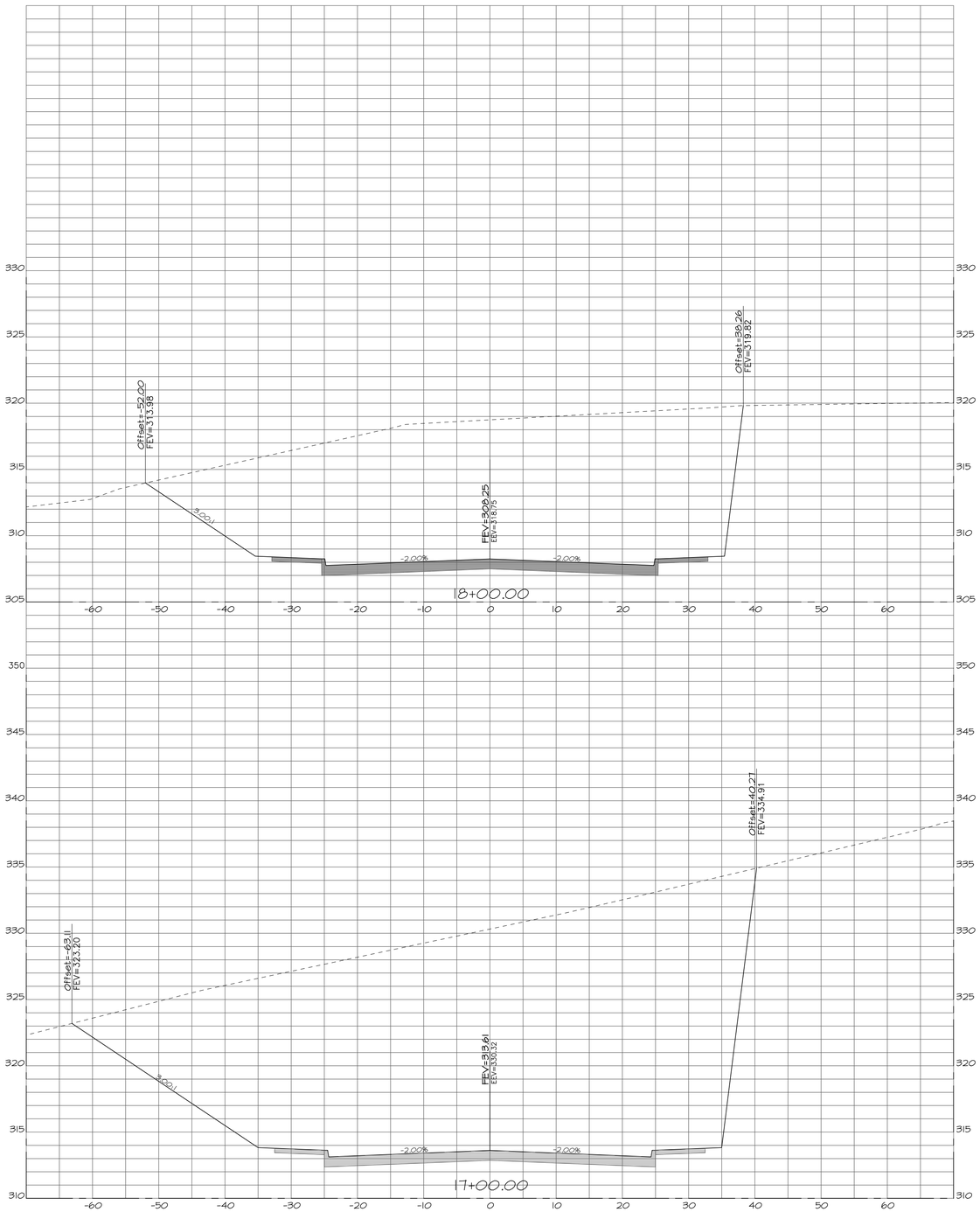

THE SEAL APPEARING ON THIS DOCUMENT WAS AUTHORIZED BY KAYLA R. WOOD, P.E. NO. 104859 ON 3/12/14. ALTERATION OF A SEALED DOCUMENT WITHOUT PRIOR NOTIFICATION TO THE RESPONSIBLE ENGINEER IS AN OFFENSE UNDER THE TEXAS ENGINEERING PRACTICE ACT.

STATE OF TEXAS
KAYLA R. WOOD
104859
REGISTERED
PROFESSIONAL ENGINEER

REVISIONS | DATE
1
2
3
4

MTG engineers & surveyors
TBPE FIRM F-1704
TBPLS FIRM 10194300
9480 SH-6 BRYAN, P.O. BOX 3166
NACOGDOCHES, TX 75964
P: 409.569.4939 F: 409.569.4700
www.mtgengineers.com

PROJECT: UNIVERSITY PH IV
DATE: 2/28/14
DESIGNED BY
CHECKED BY
APPROVED BY

X-SECTIONS

PHASE IV UNIVERSITY

DEPART. OF ENGINEER & INFRASTRUCTURE
CITY OF TEXARKANA, TEXAS

DRAWING

SHEET 45 OF 50

X:\2011 Projects\116019 University Ave Phase 4, City of Texarkana, TX\05 Engineering Design\2014 Design\Design_07.pro
Wed Mar 12, 2014 9:58AM

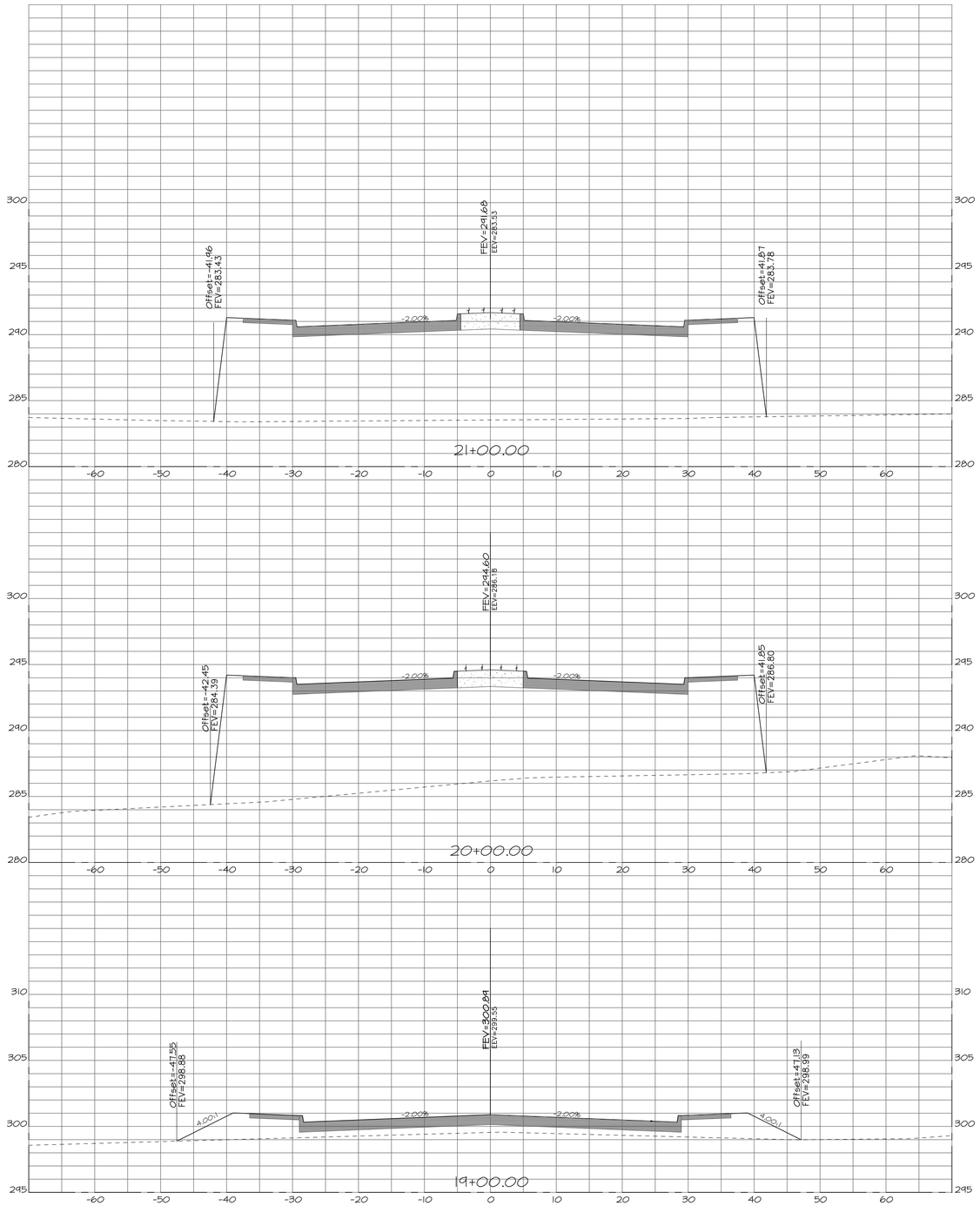

THE SEAL APPEARING ON THIS DOCUMENT WAS AUTHORIZED BY KAYLA R. WOOD, P.E. NO. 104859 ON 3/12/14. ALTERATION OF A SEALED DOCUMENT WITHOUT PRIOR NOTIFICATION TO THE RESPONSIBLE ENGINEER IS AN OFFENSE UNDER THE TEXAS ENGINEERING PRACTICE ACT.

STATE OF TEXAS
KAYLA R. WOOD
104859
REGISTERED
PROFESSIONAL ENGINEER

REVISIONS	DATE
1	
2	
3	
4	

MTG engineers & surveyors
TBPE FIRM F-1704 TBPLS FIRM 10194080
9480 SUMMERHILL RD., P.O. BOX 3186
TEXARKANA, TEXAS 75504
P. 903.838.4939 F. 903.832.4700
www.mtgengineers.com

PROJECT UNIVERSITY PH IV
DATE 2/28/14
DESIGNED BY
CHECKED BY
APPROVED BY

X-SECTIONS

PHASE IV UNIVERSITY

DEPART. OF ENGINEER & INFRASTRUCTURE
CITY OF TEXARKANA, TEXAS

DRAWING

SHEET 46
OF 50

X:\2011 Projects\116019 University Ave Phase 4, City of Texarkana, TX\05 Engineering Design\2014 Design\Design_07.pro
Wed Mar 12, 2014 9:58AM

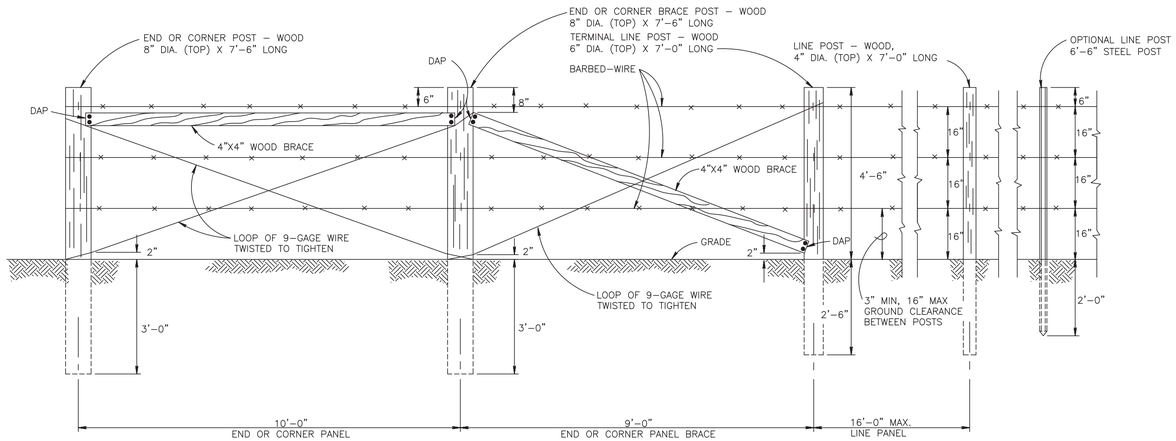

1 TYPICAL LAYOUT - 3 STRAND BARBED WIRE FENCE
NO SCALE

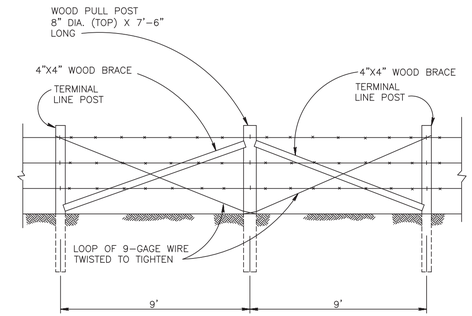

NOTE:

ALL BARBED–WIRE STRANDS SHALL BE WRAPPED TWICE AROUND PULL POST AND STAPLED AT LEAST 4 TIMES.

PULL POST BRACE PANEL DETAIL
NO SCALE

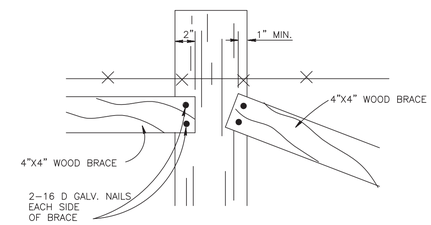

DAP DETAIL
NO SCALE

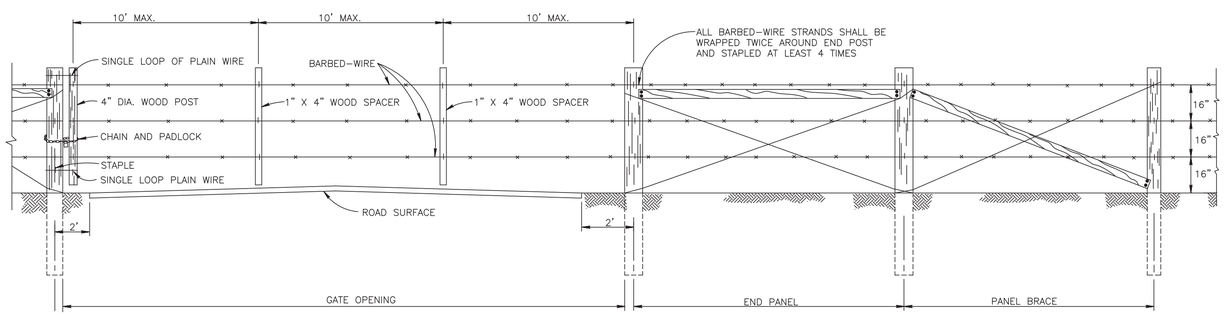

TYPICAL BARBED-WIRE DROP GATE DETAIL
NO SCALE

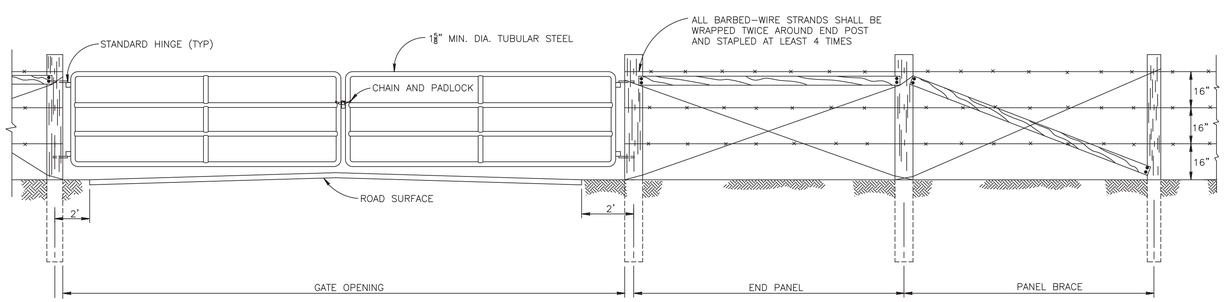

TYPICAL PANEL GATE DETAIL
NO SCALE

NOTES:

1. THE SPACING OF END OR CORNER PANEL AND BRACE PANEL OF 10' AND 9' IS MAXIMUM. WHEN CORNER OR END PANEL CONFLICTS WITH GATE OR CATTLE GUARD BRACE PANELS, OR TWO CORNER PANELS CONFLICT, BRACING AND SPACING OF POSTS SHALL BE ALTERED TO PROVIDE ADEQUATE BRACING AS REQUIRED.
2. THE GATE SHOWN IS TYPICAL. ANY STANDARD COMMERCIAL GATE THAT VARIES ONLY IN NON–ESSENTIAL DETAILS SHALL BE ACCEPTABLE, SUBJECT TO APPROVAL.
3. LATCH AND PIN FOR PANEL GATE IS REQUIRED, BUT NOT SHOWN.

$$ - THINK VALUE ENGINEERING - $$

Revisions

Symbol	Descriptions	Date	Approved
1	REV #0001 GENERAL REVISIONS	3/17/04	JWE

U.S. ARMY ENGINEER DISTRICT
CORPS OF ENGINEERS
OMAHA, NEBRASKA

Designed by: X
Drawn by: X
Checked by: X
Reviewed by: X
Submitted by:
Chief: X Section

BASE NAME BASE LOCATION

STANDARD DETAILS FOR CHAIN-LINK SECURITY FENCES, FARM STYLE FENCES AND A DOUBLE CABLE BARRIER

FARM STYLE 3-STRAND BARBED-WIRE FENCE DETAILS

Plot Scale Ratio: 3:4
Design File: 11_BWFENCE1.DWG
Spec. No.: DACA 45
Contract No.: DACA 45
Date: 03/17/04
Drawing Code: STD 872-90-11
Sheet reference number: 11

REVISIONS

	DATE
1	
2	
3	
4	

MTG engineers & surveyors
TBPE FIRM F-1439
TBPLS FIRM 10194300
9480 SH-6 BRYAN RD., P.O. BOX 3186
BRYAN, TEXAS 77805-3186
P. 979.823.9333 F. 979.823.9303
www.mtgengineers.com

PROJECT UNIVERSITY PH IV
DATE 2/26/14
DESIGNED BY
CHECKED BY
APPROVED BY

BARBED-WIRE FENCE DETAILS

PHASE IV UNIVERSITY
DEPART. OF ENGINEER & INFRASTRUCTURE
CITY OF TEXARKANA, TEXAS

DRAWING
SHEET 47 OF 50

X:\2011 Projects\116019 University Ave Phase 4, City of Texarkana, TX\05 Engineering Design\2014 Design\Design_07.pro
Wed Mar 12, 2014 9:59AM

DISCLAIMER: The use of this standard is governed by the "Texas Engineering Practice Act". No warranty of any kind is made by TxDOT for any purpose whatsoever. TxDOT assumes no responsibility for the conversion of this standard to other formats or for incorrect results or damages resulting from its use.

II. GROUND RODS

A. MATERIALS

1. All ground rods installed at electrical services, including supplemental lightning protection ground rods specified by the plans in other locations such as pole bases, shall be copper clad and UL listed. Rods shall be a minimum diameter of 5/8 inch. The length shall be a minimum of 8 feet. Larger diameter or longer length rods may be called for in some specific locations, see the individual plans sheets.
2. Ground rod clamps shall be listed to be in direct contact with the soil. Where concrete encasement is required, the clamp shall be listed for concrete encasement.

B. CONSTRUCTION METHODS

1. Ground rods installed in locations such as pole bases, to provide supplemental lightning protection need not be totally in contact with the soil. Where called for in the plans, rods may be encased in soil or concrete or any combination of soil and concrete. When concrete encased, the connection of the conductor to the rod shall be readily accessible for inspection or repairs. When driven into the soil the upper end shall be between 2 to 4 inches below finished grade. Ground rods shall not be placed in the same drilled hole as a timber pole.
2. Ground rods shall be installed such that the end imprinted with the rod's part number is installed as being the upper end.
3. Non-conductive coatings such as concrete splatter shall be removed from the rod at the clamp location.
4. Routing of lightning protection ground rod wires shall be run as short and straight as possible. Where bends are required they shall have a minimum radius of four inches.
5. Unless specifically called for by the plans, conduits used for ground rod wires shall be non-metallic. Where metal conduits are specified, a grounding bushing and properly sized bonding jumper shall be provided and properly installed on each end.
6. Where rocky soil or a solid rock bottom is encountered when driving a ground rod and the horizontal trench placement method is the only viable solution, written authorization from the Engineer must be obtained.

III. GROUND BOX

A. MATERIALS

1. Ground boxes 16x30x24 inches (WxLxD) or smaller shall be polymer concrete of the type required by the descriptive code shown elsewhere. Larger ground boxes shall be as shown elsewhere in the plans.
2. All ground boxes and covers shall be permanently marked either by impress or by permanent ink, with manufacturer's model number and manufacturer's name or logo.
3. Covers shall be bolted down, and bolt holes in the box shall be arranged to drain dirt.
4. Ground box Types A, B, C, D & E shall meet the following requirements:
   a. Ground boxes and covers be manufactured from polymer concrete reinforced with continuous strands of woven or stitched borosilicate fiberglass cloth. The polymer concrete shall be made from catalyzed polyester resin, sand and aggregate, and shall have a minimum compressive strength of 11,000 psi. Polymer concrete containing chopped fiberglass or fiber-glass reinforced plastic is not acceptable.
   b. Minimum inside dimensions shall be as follows (width x length x depth):
      Type A shall be 11.5 inches x 21 inches x 10 inches, (122311)
      Type B shall be 11.5 inches x 21 inches x 20 inches, (122322)
      Type C shall be 15.25 inches x 28.25 inches x 10 inches, (162911)
      Type D shall be 15.25 inches x 28.25 inches x 20 inches, (162922)
      Type E shall be 11.5 inches x 21 inches x 16 inches, (122317)
   c. Bottom edge of box or extension shall be footed with a minimum 1 1/4 inch flange.
   d. Ground boxes shall withstand 600 lbs. per sq. ft. applied over the entire sidewall with less than 1/4 inch deflection per foot length of box. Ground boxes and covers shall withstand a test loading of 20,000 lbs. over a 10 inch by 10 inch area centered on the cover with less than 1/2 inch deflection. Ground boxes and covers shall meet Western Underground Standards 3.6. Manufacturer shall supply certification by an independent laboratory or sealed by a Texas-Licensed Professional Engineer.
   e. Covers shall be 2 inch (nominal) thick polymer concrete. All hardware shall be stainless steel. Cover shall be secured with two 1/2 inch stainless steel bolts. Bolts shall be self-retaining and shall withstand a minimum of 70 ft-lbs. torque and shall have a minimum 750 lbs. straight pull out strength. Nuts shall be floating and shall provide a minimum of 1/2 inch movement from the center of the nut. Covers shall be skid resistant, minimum 0.5 coefficient of friction. Covers shall be interchangeable between manufacturers and shall conform to the dimensions shown herein. Unless otherwise approved by the Engineer, cover shall be legibly imprinted with the following words in minimum 1 inch letters:
      Ground Boxes containing wiring for traffic signals shall be labeled, Danger High Voltage Traffic Signal.
      Ground boxes containing wiring for illumination systems shall be labeled, Danger High Voltage Illumination.
      Ground boxes containing wiring for traffic management systems shall be labeled, Danger High Voltage Traffic Management.
      Ground boxes containing wiring for sign illumination systems shall be labeled, Danger High Voltage Sign Illumination.
      Ground boxes containing wiring for traffic signals that also contain illumination, powered by the signal electrical service, shall be labeled, Danger High Voltage Traffic Signal.

B. CONSTRUCTION METHODS

⚠1
1. Ground boxes shall be set on a 9 inch (minimum) bed of aggregate from 3/4 " up to 2" in size. Aggregate shall be in place prior to setting box and conduits shall be capped. Any gravel or dirt in conduit shall be removed.
2. When required by Item descriptive code, construction of an apron encasing a ground box including concrete and reinforcing steel shall not be paid for directly but shall be subsidiary to the ground box. Reinforcing steel may be field bent. Concrete for aprons shall be considered miscellaneous concrete for testing purposes. Aprons shall be cast in place.
3. Conduit holes may be cut in the walls of type B & D boxes at least 18 inches beneath the cover.
4. If, within the limits of this project, the Contractor must utilize an existing ground box equipped with a metal cover, the Contractor shall bond the cover to the grounding conductor with a 3 foot long flexible stranded jumper the same size as the grounding conductor. Connection of bonding jumper to metal ground cover shall not be paid for directly but shall be subsidlary to various bid items. The box(es) must be clearly shown on the plans with plan notes fully describing the work required.
5. If there are other ground boxes with metal Covers within the project limits but not involved in the contract, the Engineer may direct the Contractor to ground the covers, designating and identifying the specific boxes in writing. This work will be paid for separately.
6. Termination to metal ground box covers shall be made using a tank ground type lug.

DATE:
FILE:

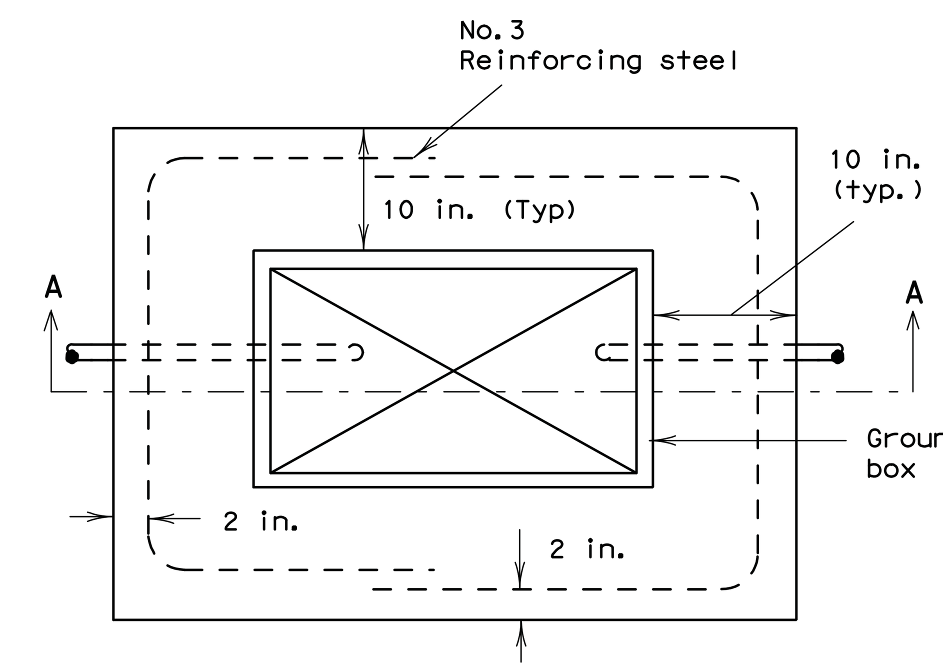

PLAN VIEW

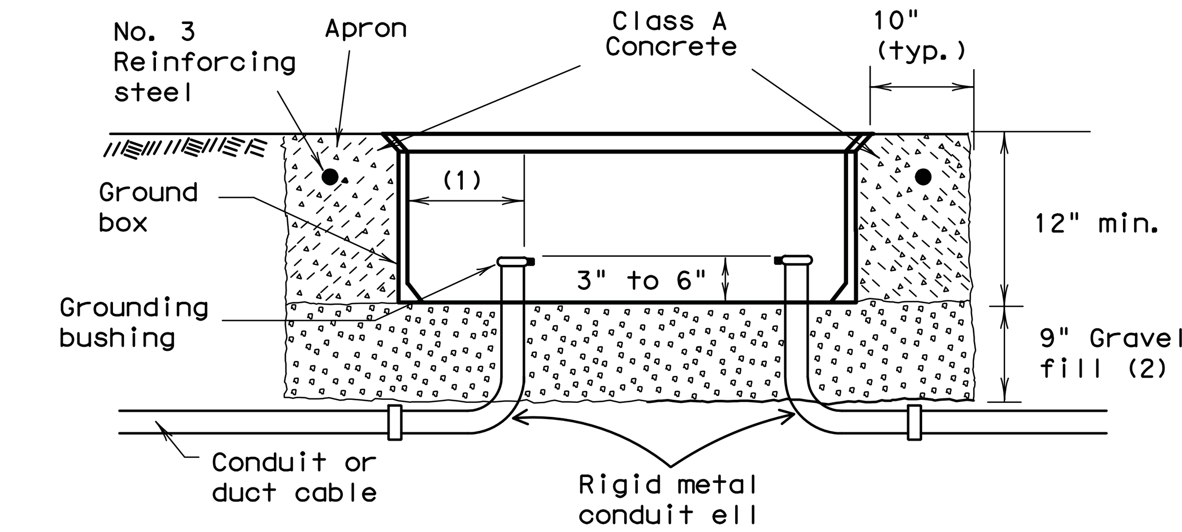

SECTION A - A

APRON FOR GROUND BOXES

(Where required)

(1) Final position of end of conduit shall not exceed one-half the distance to the side of box opposite the conduit entry.
(2) Place gravel "under" the box. not "in" the box. Gravel should not encroach on the interior volume of the box.
(3) Install bushing on the upper end of all ells.
(4) Where a ground rod is present in the ground box, connect it to any and all equipment grounding conductors using a listed connector.
(5) Maintain sufficient space between all conduits so as to allow for proper installation of bushings.
(6) All conduits shall be installed in a neat and workmanlike manner.
(7) All conduits installed in the ground box shall be sealed after completion of conductor installation and any required pull tests. Silicone shall not be used as sealant.

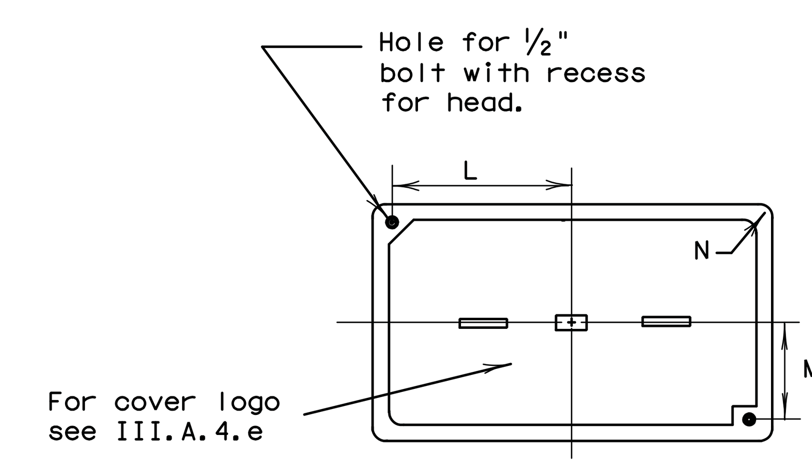

PLAN VIEW

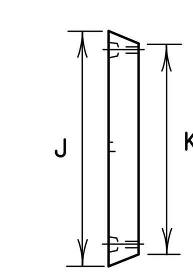

END

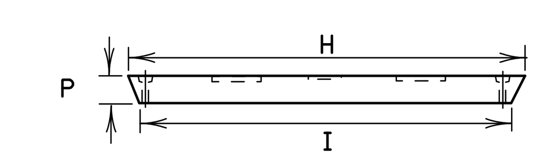

SIDE

GROUND BOX COVER

GROUND BOX COVER DIMENSIONS								
BOX	DIMENSIONS (INCHES)							
SIZE	H	I	J	K	L	M	N	P
A, B & E	23 1/4	23	13 3/4	13 1/2	9 7/8	5 1/8	1 3/8	2
C & D	30 1/2	30 1/4	17 1/2	17 1/4	13 1/4	6 3/4	1 3/8	2

5/03 Revision

⚠1 Revised notes.

Texas Department of Transportation
Traffic Operations Division

ELECTRICAL DETAILS-
GROUND BOXES

ED(3)-03

©TxDOT January 1992

DN: TXDOT	CK: TXDOT	DW: TXDOT	CK: TXDOT

REVISIONS
4-98
12-00
3-03
5-03

CONT	SECT	JOB	HIGHWAY

DIST	COUNTY	SHEET NO.

71C

REVISIONS	DATE
1	
2	
3	
4	

MTG engineers & surveyors
TBPE FIRM NO. F-354
5930 SUMMERHILL RD. | P.O. BOX 3786
TEXARKANA TEXAS 75501
P 903.838.8533 | F 903.832.4700
www.mtgengineers.com

PROJECT UNIVERSITY PH IV
DATE 2/28/14
DESIGNED BY
CHECKED BY
APPROVED BY

ELECTRICAL DETAILS-
GROUND BOXES

PHASE IV UNIVERSITY
DEPART. OF ENGINEER & INFRASTRUCTURE
CITY OF TEXARKANA, TEXAS

DRAWING
SHEET 48 OF 50

X:\2011 Projects\116019 University Ave Phase 4, City of Texarkana, TX\05 Engineering Design\2014 Design\Design_07.pro
Thu Mar 6, 2014 9:08AM

DISCLAIMER: The use of this standard is governed by the "Texas Engineering Practice Act". No warranty of any kind is made by TxDOT for any purpose whatsoever. TxDOT assumes no responsibility for the conversion of this standard to other formats or for incorrect results or damages resulting from its use.

ELECTRICAL SERVICES NOTES

All work, materials, services, and incidentals, whether or not specifically shown on the plans, which may be necessary for a complete and proper electrical service installation as specified in the plans to obtain electrical power shall be paid for, performed, furnished and installed by the Contractor. The Contractor shall contact the Utility for metering and shall comply with all Utility requirements.

Primary line extensions, connection charges, meter charges, and other charges by the Utility company to provide power to the location shown, when required, shall be paid for under force account work. The costs associated with these charges shall be approved by the Engineer prior to engaging the Utility company to do the work. The Contractor shall consult with the appropriate Utility to determine costs and requirements, and shall coordinate the Utility's work as approved by the Engineer. The Contractor shall be reimbursed only the amount billed by the Utility. No additional amount for supervision of the Utility's work will be paid.

Materials shall be new and unused, materials and installation shall comply with the applicable provisions of the National Electrical Code (NEC) and National Electrical Manufacturers Association (NEMA) standards and shall be Underwriters Laboratories (UL) Listed. Electrical Service conduits, conductors, disconnects, contactors, circuit breaker panel sizes, and branch circuit breakers, shall be as shown in the Electrical Service Data elsewhere in the plans. Faulty fabrication or poor workmanship in any material, equipment, or installation shall be justification for rejection.

The Contractor shall submit for approval no less than six (6) copies of catalog cut sheets on electrical service materials. Submittals shall be legible and shall be marked to indicate which product on a cut-sheet is to be supplied. Where manufacturers provide warranties and guarantees as a customary trade practice, Contractor shall furnish to the State such warranties or guarantees.

The Contractor shall provide locks keyed with Master #2195 for all lockable electrical enclosures. Keys and locks become property of the State. Unless otherwise approved by the Engineer, enclosures shall not be energized until locks are provided and all bolts are installed.

Circuit directories, where provided, shall be filled out. All breakers and components in shop built panels and enclosures shall be labeled with duo-colored plastic labels. Letters shall be a minimum 3/8 " in height.

Enclosures with external disconnects that de-energize all equipment inside the enclosure, need not have dead front trim, except that incoming line terminations shall be protected from incidental contact.

When galvanized is specified for nuts, screws, bolts or miscellaneous hardware, stainless steel may be used. All wiring and components shall be rated for 75 degrees C. Minimum size for service entrance conductors shall be #6 XHHW.

I. Safety Switch. A safety switch, placed ahead of the meter, shall only be used when specified by the Utility and when shown on the Electrical Service Data. The switch shall be UL Listed, heavy duty type, 600 volt, unfused, with a UL type 3R enclosure and equipped with a solid neutral (s/n) assembly. The switch shall be padlockable in the "on" position.

II. Service Type. Electrical service types A, C, D, and T shall be as schematically detailed on ED(4) or ED(5). Other service types shall be as detailed elsewhere on the plans.

III. Branch Circuit Breakers. Circuit breakers shall be thermal magnetic and have a minimum interrupting capacity of 10,000 amps and a voltage rating compatible with their use. Circuit breakers shall be sized as shown in the electrical service data. Circuit breakers in panelboards and load centers shall be full size and designed exclusively for the panelboard or load center in use. Tandem and half-width breakers shall not be used. All circuit breakers shall be permanently and clearly marked identifying the circuit or device supplied. Circuit breakers shall be UL Listed to UL489.

IV. Circuit Breaker Panelboard. Panelboards shall be UL Listed. Panelboards shall have copper busses, a minimum of 6 one-pole spaces or as required in the electrical service data, and when required will be rated for service equipment. Enclosure shall meet or exceed UL type 3R classification. Panelboards shall have a threaded hub conduit entry for conduit entering the top of the enclosure. Circuit breakers shall be bolt-in type only.

V. Circuit Breaker Load Center. Load centers shall be UL Listed. Load centers for type T services may have copper or aluminum busses, all other load centers will be copper bus only. Load center will have a minimum of 4 one-pole spaces, and shall be rated for service equipment. Enclosure shall meet UL type 3R classification. Load centers shall have a threaded hub conduit entry for conduit entering the top of the enclosure. Circuit breakers shall be plug-in type only. Load centers for type T services shall accomodate a maximum of 6 one-pole breakers.

VI. Separate or Auxiliary Enclosure. Separate enclosures for HOA, photocell and lighting contactors for types D & T Services shall be a UL Listed assembly with outer door. Interior shall have dead front trim. HOA switch operator shall extend through the dead front trim. Photocell shall be mounted inside the enclosure as described in paragraph XIII when required by descriptive code. Separate enclosures shall meet the construction requirements of paragraph VIII. E, except that separate enclosure shall not have external operating handle, need not have a data pocket and door may latch at only one point. All equipment may be located in one enclosure instead of two, when approved by the Engineer.

VII. Where a Type D or T service is provided, laminated "as built" drawings are required as shown on ED(5) VIII E; shall be delivered before completion of the work, to the Engineer in lieu of placement within these smaller enclosures. Conduit may not enter the back wall of a service enclosure penetrating the equipment mounting panel. Provide grounding bushings on all metal conduits, terminate bonding jumper to grounding bus. Grounding bushing is not required when the end of the metal conduit is fitted with a conduit sealing hub or threaded boss such as a meter base.

EXPLANATION OF ELECTRICAL SERVICE DESCRIPTIVE CODE

ELEC SERV TY X (XXX/XXX) XXX (XX) XX (X) XX (X)

Example: ELEC SERV TY A(240/480)100(NS)SS(E)GC(O)

- X — Schematic Type
- (XXX/XXX) — Service Voltage (V / V)
- XXX — Disconnect Amp Rating (000 indicates main lug only)
- (XX) — SS= Safety switch ahead of meter; NS= No switch ahead of meter and/or no meter required
- XX — Enclosure Type: GS= Galvanized steel (see ED(5)VIII,D); SS= Stainless steel; AL= Aluminum
- (X) — Photocell Mounting Location: T= Top of pole; E= Inside service/separate enclosure; L= Luminaire mounted; N= None
- XX — Service Support Type: GC= Granite concrete; OC= Other concrete; TP= Timber pole; SP= Steel pole; SF= Steel frame; OT= Pole by others or paid for separately; EX= Existing pole; TS= Switch gear to be placed on traffic signal pole; RT= Rectangular structural tubing; PS= Pedestal Service (see ED(5)VIII,G)
- (X) — O= Overhead service; U= Underground service

DATE:
FILE:

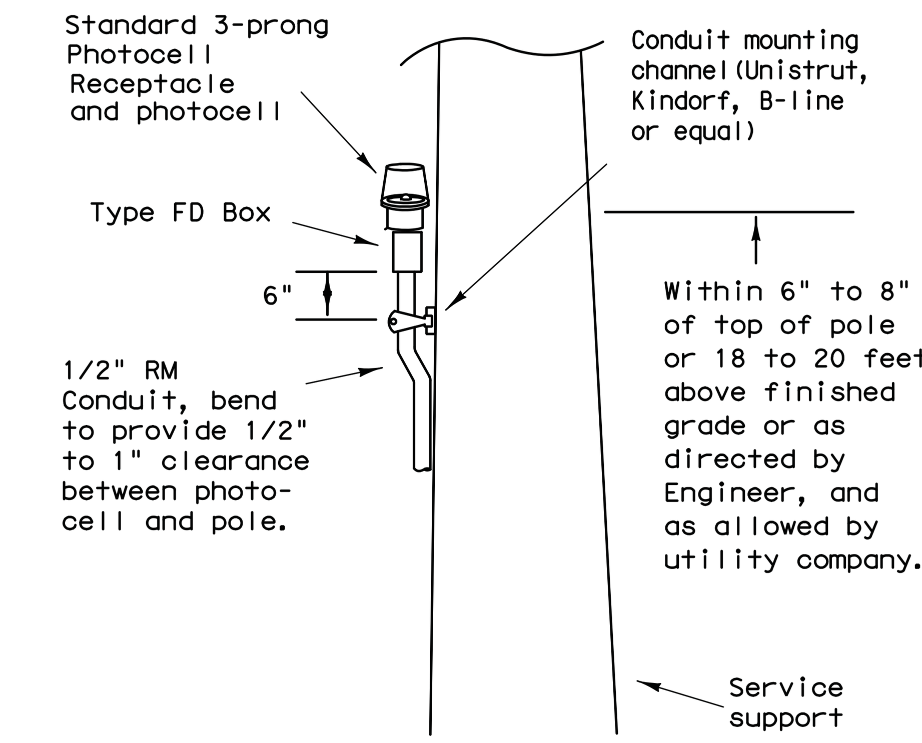

TOP MOUNTED PHOTOCELL

Conduit support spacing 3 feet from enclosure; 5 feet max.

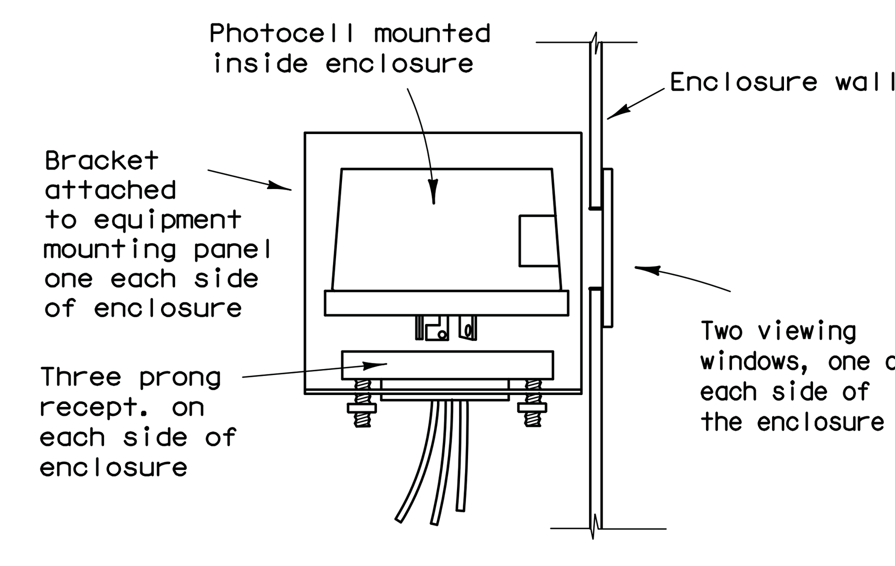

ENCLOSURE MOUNTED PHOTOCELL

For photocell specifications see ED(5),XIII.

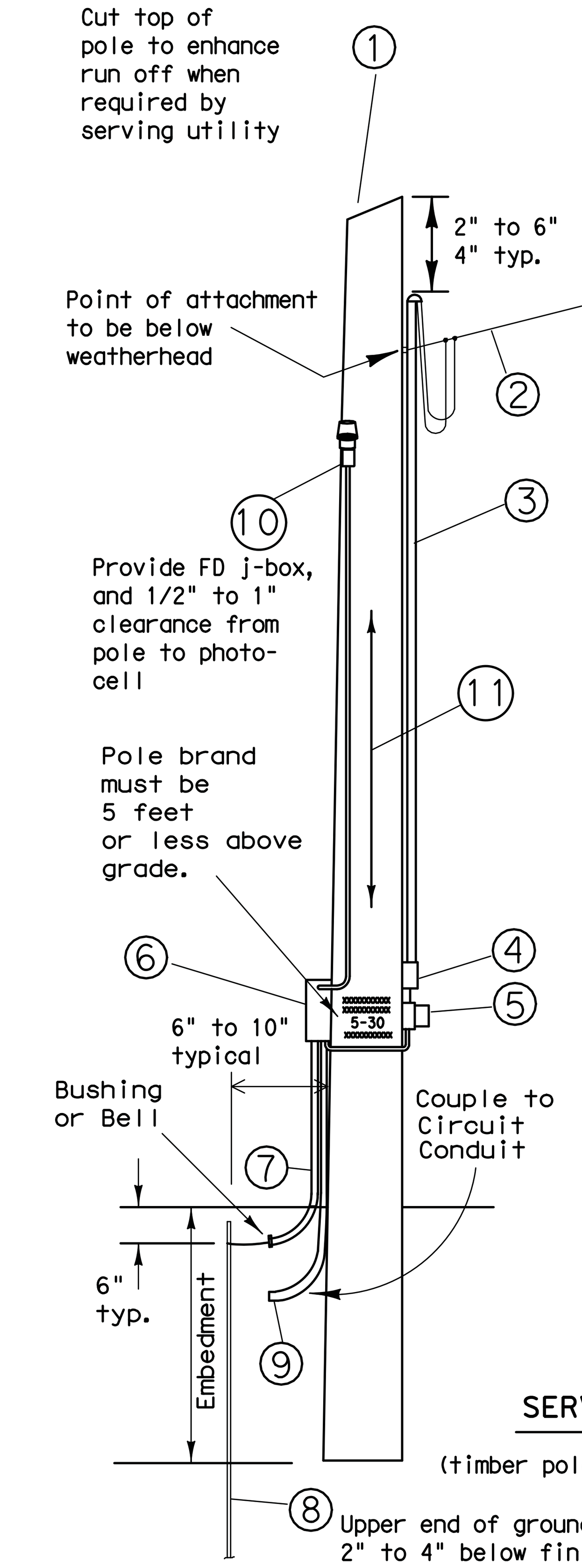

1 - Class 5 pole, height as required
2 - Service drop from utility company (attached below weatherhead)
3 - Service conduit and service entrance conductors(RMC) (See Electrical Service Data)
4 - Safety switch (when required)
5 - Meter (when required)
6 - Service enclosure
7 - No. 6 bare grounding electrode conductor in 1/2 " PVC to ground rod - extend 1/2 " PVC 6" underground.
8 - 5/8 " x 8' Copper clad ground rod - drive ground rod completely underground unless otherwise approved by the Engineer.
9 - RM conduit - same size as branch circuit conduit.
10 - Photocell and conduit - if top mounted. (See Electrical Service Data)
11 - When required by the serving utility provide bare #6 awg copper conductor. Run wire from pole top to butt wrap or copper butt plate. Protect conductor to a height of 8 ft above finish grade.

LIQUIDTIGHT FLEXIBLE METAL CONDUIT (LFMC)

(If applicable)

- Liquidtight flexible metal conduit, may be used when meter and service enclosure are mounted 90 to 180 degrees to each other. Size shall be same as service entrance conduit.
- LFMC shall not exceed 3 ft. and shall be securely supported within one ft. of each end. No strap required for LFMC shorter then 12"
- Each end of LFMC must have a grounding bushing or be terminated with a grounding fitting.
- A neutral conductor must be installed within the LFMC.
- Bend in liquidtight flexible metal conduit shall not exceed 180 degrees.
- A pull test is required on all installed conductors, at least six inches of free conductor movement shall be demonstrated to the satisfaction of the Engineer.

SERVICE SUPPORT TYPE TP (O)

(timber pole, overhead service, typical arrangement)

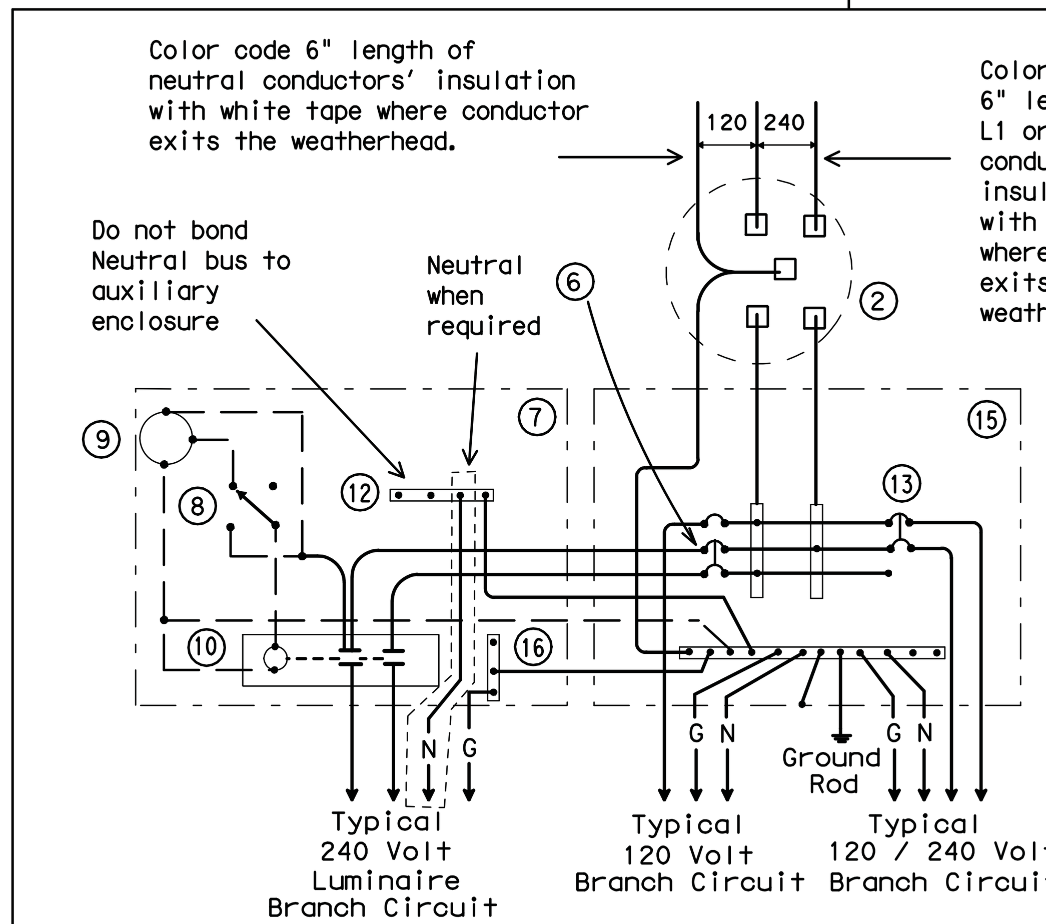

SCHEMATIC TYPE T

120/240 VOLTS - THREE WIRE

Install photocell and lighting contactor when shown on Electrical Service Data.

SCHEMATIC LEGEND

1 - omitted
2 - Meter (when required)
3 - Service Assembly Enclosure
4 - Main Disconnect Breaker (Not Used)
5 - Omit
6 - Circuit Breaker, 15 Amp typical for control circuit wiring
7 - Auxiliary Enclosure
8 - Control Station ("H-O-A" Switch)
9 - Photo Electric Control (enclosure-mounted shown)
10 - Lighting Contactor
11 - Power Distribution Terminal Blocks (Not Used)
12 - Neutral Bus required when 120 v. lights are controlled by lighting contactor
13 - Branch Circuit Breaker (See Electrical Service Data)
14 - Circuit Breaker Panelboard (Not Used)
15 - Load Center
16 - Ground Bus

Line	Meaning
———	Power Wiring
– – – –	Control Wiring
—N—	Neutral Conductor (when required-to serve 120 v. loads only)
—G—	Equipment grounding conductor-always required

TIMBER POLE NOTES

1. Conduit and electrical conductors attached to the electrical service pole and underground within 12 inches of service pole shall not be paid for directly but shall be subsidiary to the service pole.
2. Pole top mounted photocell, install on north side of pole or in service enclosure as required. See Electrical Service Data.
3. Attach meter and service equipment with stainless steel or galvanized channel (Unistrut, Kindorf, or equal). Gain pole as required to provide flat surfaces for each strut. Paint ends of galvanized channel with zinc rich paint. Gain depth 5/8" max. Gain height 1 7/8" max. Strut to be 1" max. deep, and 1 5/8" wide max. Secure each strut section to timber pole with two galvanized or SS lag bolts, 1/4" diameter min. by 1 1/2" length min. Place flat cut galvanized or SS washer on each lag bolt. Gain pole in a neat and workmanlike manner.
4. Embedment depth shall be as required in Item 627 Treated Timber Poles.
5. Poles trimmed for excess length shall be trimmed from the top end only.

Texas Department of Transportation
Traffic Operations Division

ELECTRICAL DETAILS- SERVICE SCHEMATICS AND SUPPORT-TYPE TP (OVERHEAD)

ED(4)-03

© TxDOT April 1998	DN: TXDOT	CK: TXDOT	DW: TXDOT	CK: TXDOT
REVISIONS 12-00 3-03	CONT	SECT	JOB	HIGHWAY
	DIST	COUNTY	SHEET NO.	

71D

REVISIONS	DATE
1	
2	
3	
4	

MTG engineers & surveyors
TBPE FIRM NO. F-354
5930 SUMMERHILL RD. | P.O. BOX 3786 TEXARKANA TEXAS 75501
P 903.838.8533 | F 903.832.4700
www.mtgengineers.com

PROJECT	UNIVERSITY PH IV
DATE	2/28/14
DESIGNED BY	
CHECKED BY	
APPROVED BY	

ELECTRICAL DETAILS- SERVICE SCHEMATICSD AND SUPPORT-TYPE TP (OVERHEAD)

PHASE IV UNIVERSITY
DEPART. OF ENGINEER & INFRASTRUCTURE
CITY OF TEXARKANA, TEXAS

DRAWING
SHEET 49 OF 50

X:\2011 Projects\116019 University Ave Phase 4, City of Texarkana, TX\05 Engineering Design\2014 Design\Design_07.pro
Thu Mar 6, 2014 9:09AM

DISCLAIMER: The use of this standard is governed by the "Texas Engineering Practice Act". No warranty of any kind is made by TxDOT for any purpose whatsoever. TxDOT assumes no responsibility for the conversion of this standard to other formats or for incorrect results or damages resulting from its use.

DATE:
FILE:

SERVICE ENCLOSURE NOTES

VIII. Service Assembly Enclosures. All service assemblies and enclosures shall be UL Listed for the intended purpose.

A. Shop built or shop assembled service assemblies (all types except Type T and Type D without lighting contactor or enclosure mounted photo cell) and all auxiliary equipment enclosures mounted with service equipment and paid for as part of Item 628, "Electrical Services", shall be built or assembled by a UL Listed Industrial Control Panel shop and shall have a unique serial numbered UL Label with the words "LISTED ENCLOSED INDUSTRIAL CONTROL PANEL". The same or an additional label shall have the name, location, and phone number of the shop, the UL file number of the shop,the shop order or drawing number, date of manufacture or assembly, and the line voltage. The service assembly enclosure shall also be labeled "SUITABLE ONLY FOR USE AS SERVICE EQUIPMENT".

B. Conduit entries into the top of enclosures shall have threaded hub. Conduit entries through the equipment mounting back plate will not be allowed.

C. All service enclosure front doors shall be permanently labeled "DANGER HIGH VOLTAGE". Label shall be a self sticking type, intended for outdoor installation. Lettering style, layout and colors of red, black and white shall be as required by OSHA. Label letters shall be 1 to 1 1/2 inches high or as high as the enclosure door width will permit for smaller services. Separate or auxiliary lighting enclosures need not be OSHA labeled when mounted in the same viewing plane as the service enclosure front door. Where only one type of load is served by the service, the service door shall be marked using duo-colored plastic labels or self adhesive vinyl weather resistant labels, minimum of 1 inch high; applied in a neat and workmanlike manner. On the label will be the service number shown on the plans as well as identifying the load served specifically (i.e. lighting, landscaping, signals, traffic management or other wording as directed by the Engineer). Safety switches need not be OSHA labeled unless specifically required by the serving utility.

D. Type GS enclosures will only be allowed for service Types D and T without an enclosure mounted photocell and/or lighting contactor and the Type C panelboard. This spec will allow an "off the shelf" product meeting these specifications to be used. Type GS enclosures shall be made from pre-galvanized steel sheeting, hot dipped galvanized steel, or powder coat painted steel unless shown differently on the plans. Steel enclosures shall be painted inside and outside; galvanized enclosures may be painted. Unless otherwise approved by the Engineer, painted enclosures shall be gray, beige, white or light green. Panelboard/loadcenter enclosures shall meet UL type 3R requirements, shall have a dead front trim, and an outer padlockable door preventing unauthorized persons from operating contained equipment. Galvanized steel is no longer allowed for Types A,C,or custom-built D or T enclosures. If GS is shown in the descriptive code for any of these, an AL shall be provided.

E. Type AL enclosures for service Types A and C shall meet UL type 3R requirements and shall also meet additional requirements of this paragraph. The enclosure shall have both a main disconnect remote operator handle and a door latch handle. Die-cast handles are not acceptable. The main disconnect remote operator shall be flange-mounted, shall interlock the door when in the "on" position, and shall be padlockable in both the "on" or "off" positions. Door latch shall latch at two or more points, operate by a handle separate from disconnect switch and be capable of being locked. Door closure clamps will not be allowed. Lock must be keyed to Master #2195. All the enclosures shall have either a continuous stainless steel piano hinge with stainless steel pin or enclosures less than 30 inches may have two heavy duty hinges, those over 30 inches must have three. Heavy duty two and three point hinges shall have a 0.185 inch minimum diameter electro-zinc plated steel pin or a stainless steel pin. Two point hinged doors shall be rated for 56 lbs of loading. Three point hinged doors shall be rated for 70 lbs of loading. The door shall have an attached data pocket constructed of either thermoplastic or metal. Pocket shall be 12" x 12", unless that size will not fit in enclosure. The pocket shall then be as large as possible, as approved by the Engineer, and mechanically attached with stainless steel nuts and bolts, or stainless steel or aluminum rivets. Enclosure shall include an equipment mounting panel installed inside the enclosure on collar studs or tapped bosses, and constructed of a minimum 12 guage galvanized steel. Equipment mounting panels shall not be painted. Enclosure shall have factory installed external mounting feet. Enclosure door shall be capable of opening at least 130 degrees, with arm or other approved means to hold the door open. Only the enclosure exterior will be primed and painted. Paint color shall be beige or gray and shall be powder coat paint as shown below. Condensation drainage shall be provided in the bottom of the enclosure before leaving the factory. The Contractor shall prepare and submit a schematic drawing unique to an individual service. The approved drawing shall be laminated and placed in the document pocket of the service at the time of shipment to the job site. All applicable wiring diagrams and plan sheet layouts for all equipment and branch breaker circuits supplied by that service shall also be laminated and placed in the document pocket prior to shipping. Type AL enclosures for Type D and T services with enclosure mounted photocell and/or lighting contactor shall have the loadcenter interior mounted in an enclosure with properly adapted dead front trim. Types D and T shall not have a loadcenter exterior "can" mounted inside another enclosure meeting these specifications. (Do not put one enclosure inside another enclosure). Types D and T with enclosure mounted photocell and/or lighting contactor shall meet the additional requirements of this paragraph except that remote-operating handle will not be provided.

F. Type SS enclosures for Type A and C shall meet all the requirements above for their respective type AL. Type SS enclosures for D and T shall meet all the requirements above for their respective type AL. Stainless Steel shall not be painted.

G. PS enclosure shall be as detailed and specified on ED(8). Galvanized steel will not be allowed for any pedestal service. If GS is shown in the descriptive code an AL will be provided.

IX. Powder Coat Paint. Powder coating shall be either a polyester thermosetting resin, a zinc rich primer with a TGIC (triglycidyl isocyanurate) powder overcoating, or a zinc-rich epoxy powder, applied by either electrostatic spray or fluidized bed immersion, high temperature oven cured, high density, low gloss, 4 mil thick (minimum), coating. Adhesion shall meet the 5A or 5B classifications of ASTM D3359. Finish shall be uniform in appearance and free of scratches.

X. Main Disconnect. Main disconnect device shall be a circuit breaker, as specified in the Electrical Service Data, shall be two or three pole, and rated for the voltage and amperage specified. Circuit breaker shall be an UL Listed thermal-magnetic circuit breaker controlled by flange-mounted remote operator in the service assembly enclosure when required. Circuit breakers shall have a minimum interrupting rating of 10,000 Amps. When the utility company provides a transformer larger than 50 KVA, Contractor shall verify that the available fault current is less than the circuit breaker amps interrupting capacity (AIC) rating and shall provide documentation from the Utility to the Engineer. Documentation shall be submitted at the same time as other electrical submittals. Circuit breaker shall be UL Listed to UL489. No backfed breakers will be allowed for use as a main disconnect.

XI. Control Circuit. Control circuit protection shall be 15 amp circuit breaker.

XII. Control Station ("H-O-A" Switch). Control station shall be a maintained-contact, three position selector switch in an UL type enclosure. Switch shall be rated 600 volts and shall be fitted with "Hand-Off-Auto" legend.

XIII. Photo Electric Control. Photo electric control shall consist of a photocell, internal lightning arrester, and relay or bimetallic switch mounted inside a weatherproof enclosure with standard 3-prong twist lock photocell plug and receptacle.The enclosure shall be made of poly-acrylic with clear acrylic window. Enclosure chassis shall be molded thermosetting plastic. The photocell shall have a polyethylene gasket, and shall have a hermetically sealed cadmium sulfide cell. The arrester shall have an enclosed type expulsion arrester rated 2.0 kV sparkover with 5,000 amps follow-through. Relay or switch shall be time delay type with normally closed contacts. Photo electric control shall be rated a minimum of 1800 VA, voltage as required. Enclosure mounted photocells shall be the same as above except that the photocell shall be mounted inside the enclosure. The enclosure shall have two acrylic paned windows, or other material approved by the Engineer, one on each side of the enclosure. Each window shall be rectangular approximately one inch by two inches, round 2 inch diameter, or as otherwise approved by the Engineer. Bracket and photocell's receptacle will be mounted inside enclosure next to each window. Except for window side, 2" of clearance is required on all sides of photocell for ease of replacement. The photocell's receptacle is held in place by two mounting screws on bracket and located next to each window of the enclosure. The 3-prong twist lock photocell shall be mounted in a position to receive light from the window closest to the photocell.The photocell shall be mounted in a position to receive light from one window. Top of pole mounted photocells shall be mounted as shown on ED(4). The Contractor shall be responsible for proper operation of the photo-electric control. The Contractor shall move and/or adjust or shield the photocell from stray or ambient nighttime light or shall make any other adjustments required for proper operation. The photocell shall face North when practicable. Unless otherwise shown on the plans, the photocell shall turn on the illumination system at 1.0 +(-) 0.5 footcandle and turn off the illumination system at two footcandles higher than turn on.

XIV. Lighting Contactor. Lighting contactor shall be a UL Listed NEMA rated lighting contactor, two-pole or multipole as required, electrically held type designed to control high pressure sodium lighting loads, with silver alloy double break contacts rated at 240 volts, 480 volts or 600 volts as required. Lighting contactor shall not be the DIN rail mounted type.

XV. Power Distribution Terminal Blocks. Power distribution terminal blocks shall be rated for 600 volts and shall be used for line side connections to branch circuit breakers where more than one circuit breaker is required. Lugs on blocks shall be properly sized for conductors being used. Only one conductor shall be placed under each lug.

XVI. Neutral/Ground Bus. Neutral/ground bus shall be a factory made bus permanently bonded to the enclosure with properly sized lugs for grounding and neutral conductors.

SCHEMATIC LEGEND

1 - Safety Switch (when required)
2 - Meter (when required)
3 - Service Assembly Enclosure
4 - Main Disconnect Breaker (See Electrical Service Data)
5 - Omit
6 - Circuit Breaker, 15Amp
7 - Auxiliary Enclosure
8 - Control Station ("H-O-A" Switch)
9 - Photo Electric Control (enclosure-mounted shown)
10 - Lighting Contactor
11 - Power Distribution Terminal Blocks
12 - Neutral/Ground Bus
13 - Branch Circuit Breaker (See Electrical Service Data)
14 - Circuit Breaker Panelboard (See Electrical Service Data)
(If Type C is shown as AL or SS on descriptive code, this is the service assembly enclosure only. Panelboard enclosure is GS unless otherwise noted.
15 - Load Center

——— Power Wiring
– – – – Control Wiring
—N— Neutral Conductor (when required) serve 120 v. loads only)
—G— Equipment grounding conductor-always required

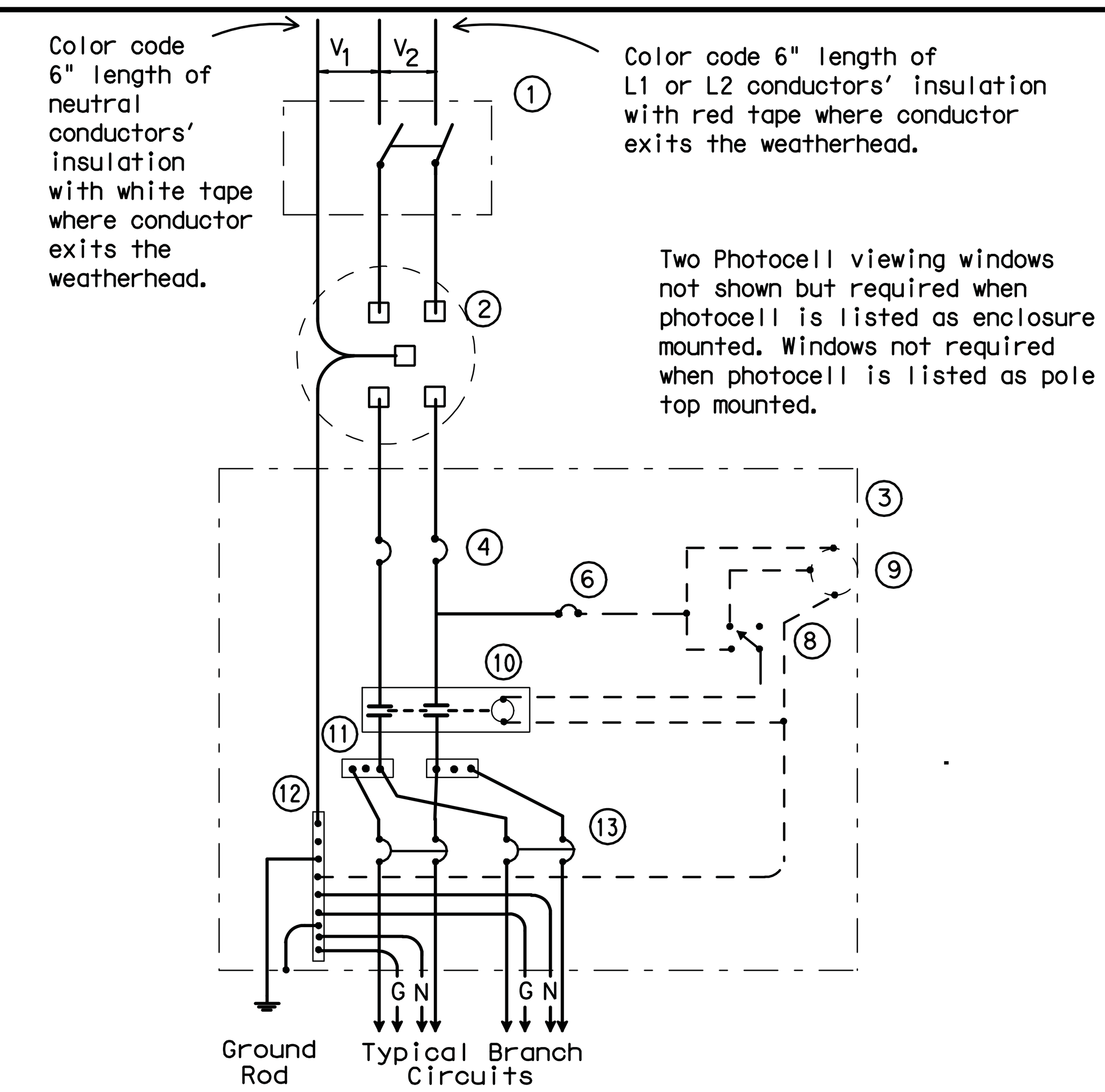

SCHEMATIC TYPE A

THREE WIRE

Maximum feeder circuit size (High Mast Poles): 100 amps for two pole 480V, 125 amps for one or two pole 120V or 240V. Maximum branch circuit size: 50 amps.

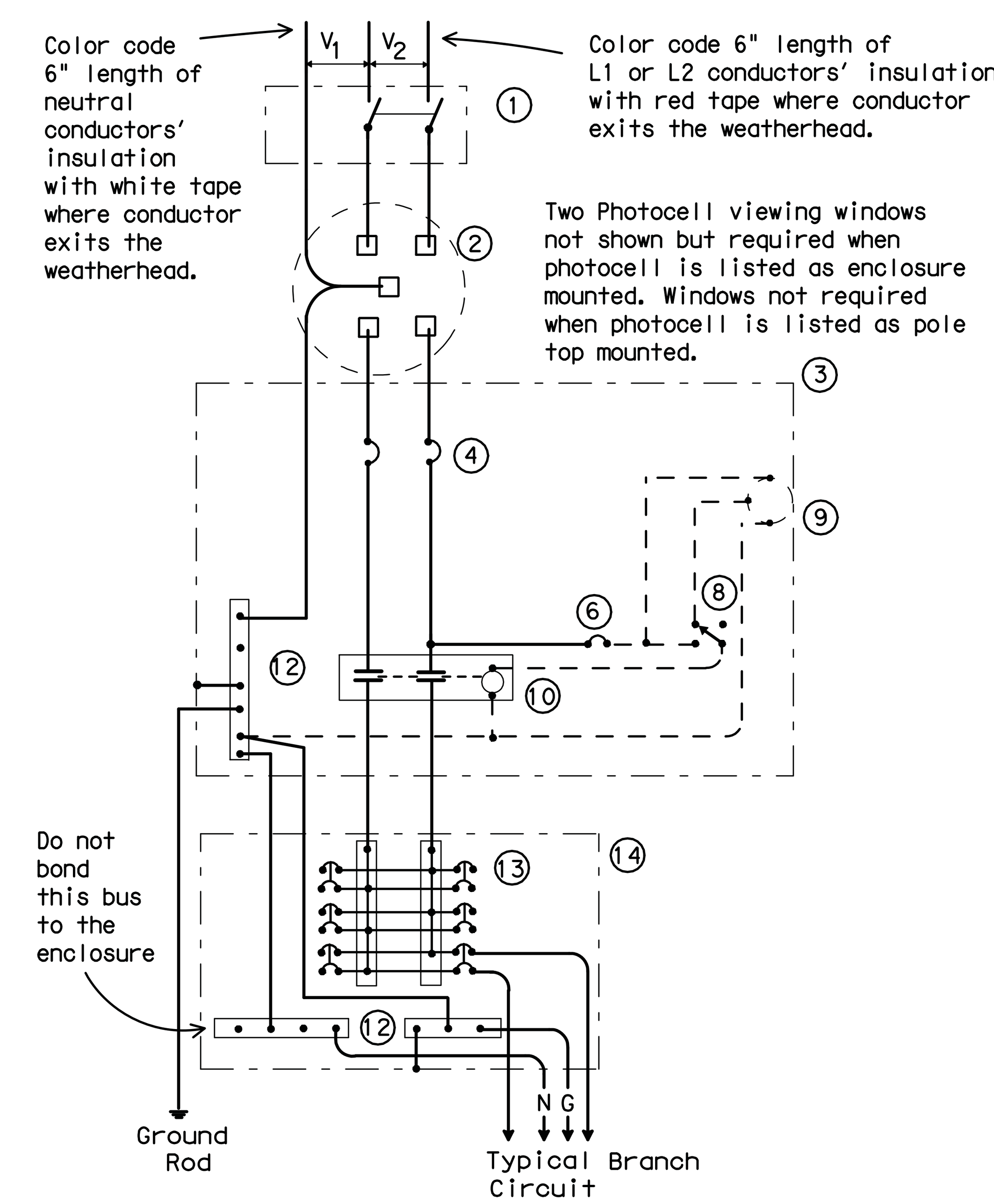

SCHEMATIC TYPE C

THREE WIRE

Maximum feeder circuit size (High Mast Poles): 100 amps for two pole 480V, 125 amps for one or two pole 120V or 240V. Maximum branch circuit size: 50 amps.

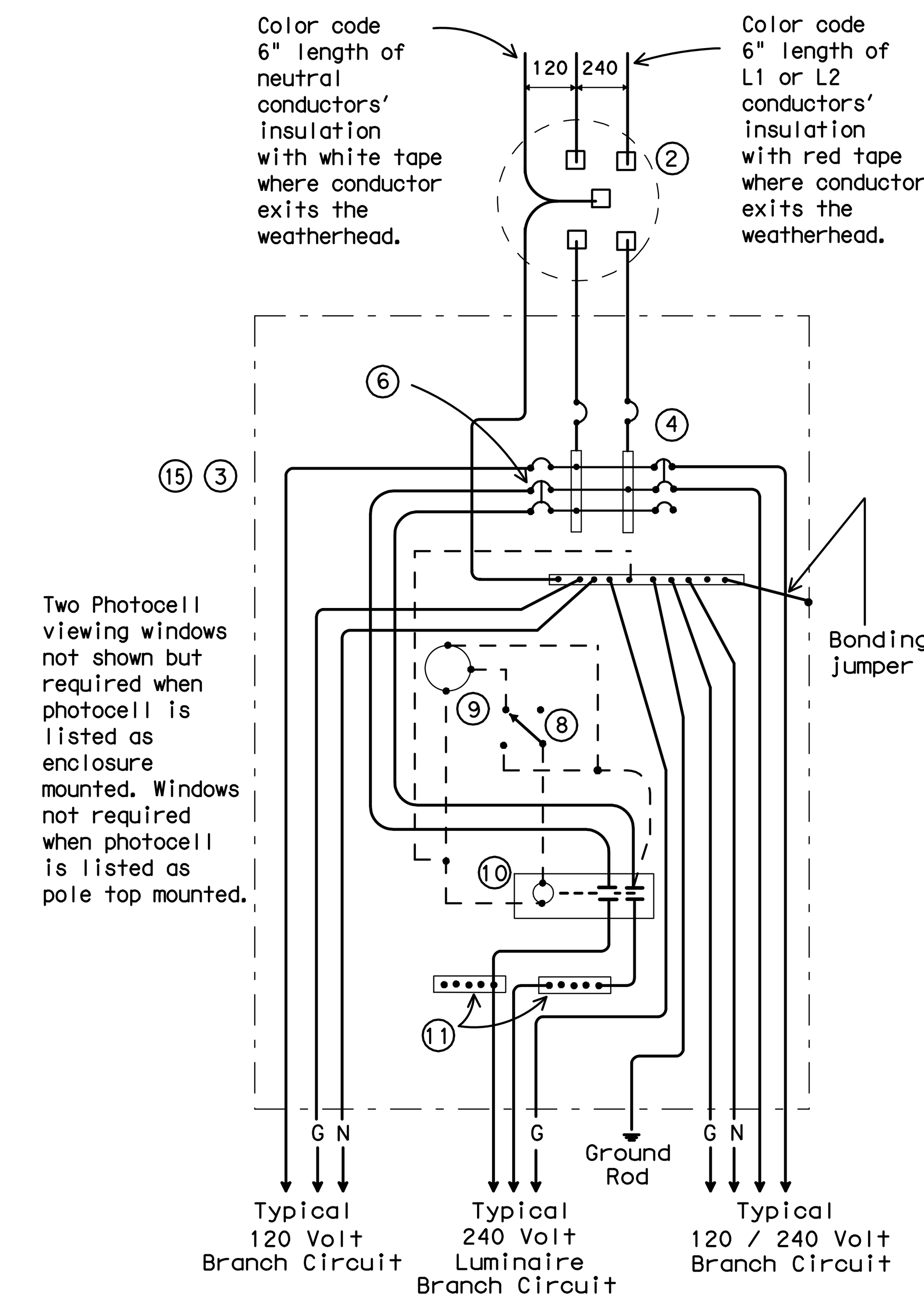

SCHEMATIC TYPE D

120/240 VOLTS - THREE WIRE

Install photocell and lighting contactor when shown on Electrical Service Data. See Type D service notes.

TYPE D SERVICE NOTES

Photocell and lighting contactor shall be located either in the same UL type 3R enclosure with load center or, if approved by Engineer, in separate enclosure. There shall be a window on each side of enclosure to allow operation of photocell. Both photocell contactor and breaker area shall have dead front trim. Enclosure, except for RT and PS supports, shall not exceed 36 inches in height or 16 inches in width unless approved by the Engineer. Ty D load center with lighting controls or TY D separate lighting control enclosure shall have power distribution blocks for a minimum of 4, #8 conductors per phase.

Texas Department of Transportation
Traffic Operations Division

ELECTRICAL DETAILS- SERVICE ENCLOSURE & NOTES

ED(5)-03

© TxDOT April 1998

DN: TXDOT	CK: TXDOT	DW: TXDOT	CK: TXDOT

REVISIONS
12-00
3-03

CONT	SECT	JOB	HIGHWAY

DIST	COUNTY	SHEET NO.

71E

REVISIONS	DATE
1	
2	
3	
4	

MTG engineers & surveyors
TBPE FIRM NO. F-354
5930 SUMMERHILL RD. | P.O. BOX 3786
TEXARKANA TEXAS 75501
P 903.838.8533 | F 903.832.4700
www.mtgengineers.com

PROJECT: UNIVERSITY PH IV
DATE: 2/28/14
DESIGNED BY
CHECKED BY
APPROVED BY

ELECTIRCAL DETAILS- SERVICE ENCLOSURE & NOTES

PHASE IV UNIVERSITY
DEPART. OF ENGINEER & INFRASTRUCTURE
CITY OF TEXARKANA, TEXAS

DRAWING
SHEET 50 OF 50

X:\2011 Projects\116019 University Ave Phase 4, City of Texarkana, TX\05 Engineering Design\2014 Design\Design_07.pro
Thu Mar 6, 2014 9:10AM

DISCLAIMER: The use of this standard is governed by the "Texas Engineering Practice Act". No warranty of any kind is made by TxDOT for any purpose whatsoever. TxDOT assumes no responsibility for the conversion of this standard to other formats or for incorrect results or damages resulting from its use.

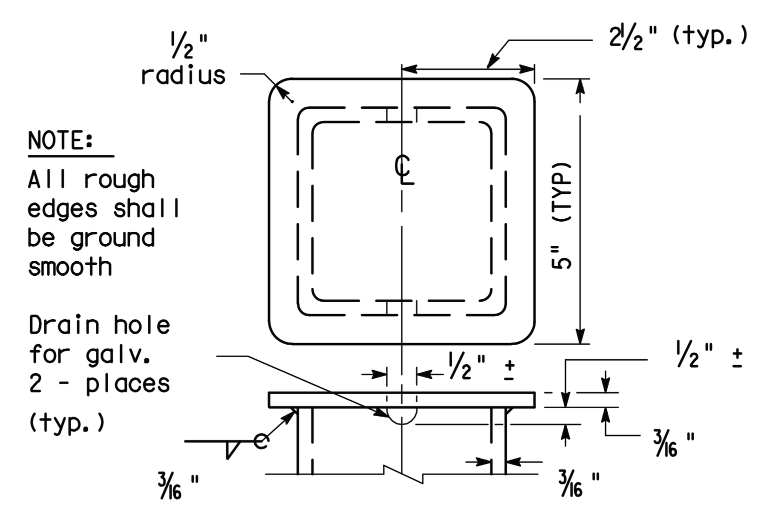

TOP OF POLE
TYPE SF & SP

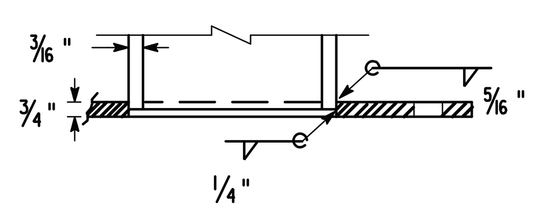

BOTTOM OF POLE
TYPE SF & SP

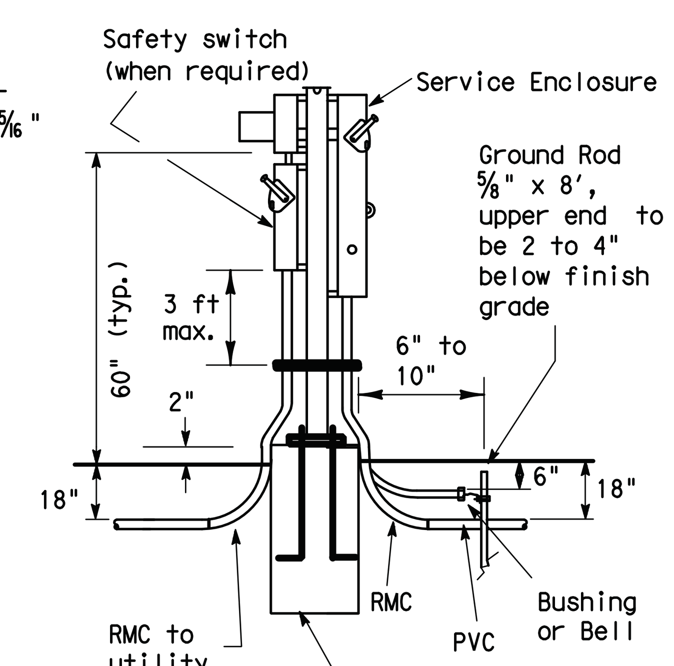

SERVICE SUPPORT
TYPE SP (U)
UNDERGROUND SERVICE
WITH SAFETY SWITCH

Color code 6" of grounded neutral conductors insulation with white tape where conductor exits the weatherhead. Color code 6" of L1 or L-2 Hot-ungrounded conductors insulation with red tape where conductor exits the weatherhead. Conductor free length, 12" min., 18" max.

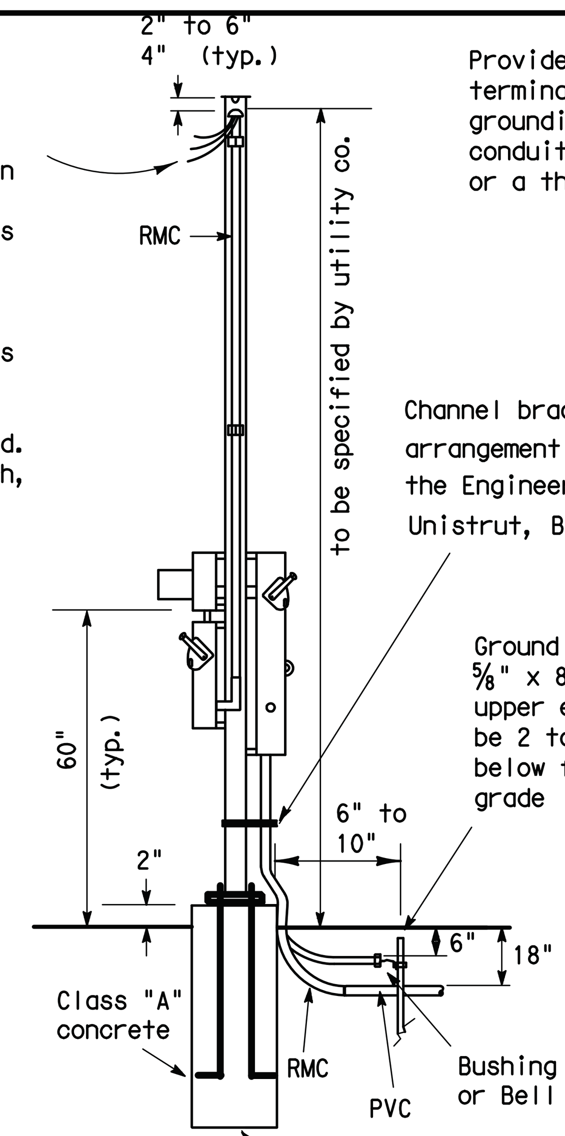

SERVICE SUPPORT
TYPE SP (O)
OVERHEAD SERVICE
WITH SAFETY SWITCH

Provide grounding bushings on all metal conduits, terminate bonding jumpers(min. #6 AWG. Copper) to grounding bus. Grounding bushing not required when conduit end is fitted with a conduit sealing hub or a threaded type of boss such as a meter hub.

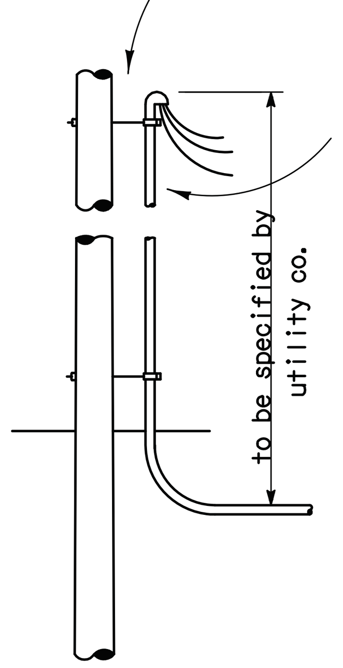

UNDERGROUND RISER
AT UTILITY POLE
(for underground service)

NOTES:

1. Support Type SP and SF: Fabricated from 4" x 4" x 3/16 " square structural tubing, ASTM A500 Grade A or G or equal. Base plate shall be 3/4 " plate, ASTM A36 or equal. All equipment and conduit shall be mounted on galvanized channel strut, 1 1/2 " x 1 5/8 " x 12 guage galvanized steel channel (Unistrut, Kindorf, B-line or equal) clamped with channel hardware, bolted or welded to vertical member as approved by the Engineer.
2. Paint field cut ends of all channels with zinc-rich paint.
3. All Steel Poles (SP and SF) shall be hot-dip galvanized after fabrication. Poles for overhead service shall be fitted with eyebolt or similar fitting, as approved by the utility company, for attachment of sevice drop to the pole.
4. All conduit and conductors attached to the electrical service and within 12 inches of the electrical service will not be paid for directly, but shall be subsidiary to the electrical service. All conduit and conductors from the utility company pole to the point 12 inches from the electrical service, including conduit and conductors required for the utility pole riser when furnished by the Contractor, will be paid for separately.
5. All mounting hardware and installation details of services shall be in accordance with utility company specifications.
6. Anchor bolts for underground service supports shall be 3/4" x 18" x 4" (dia. x length x hook length). Anchor bolts for overhead services shall be 3/4" x 56" x 4". Anchor bolts shall be provided with leveling nuts.
7. Conduit for grounding electrode conductor (ground rod wire) shall be 1/2" PVC. All other conduit on electrical services shall be rigid metal conduit. Service entrance conduit size shall be as shown elsewhere. Conduit for branch circuit entry to enclosure shall be the same size as that shown on the layout sheets for branch circuit conduit. Rigid metal conduit shall extend to the rigid metal elbow and then be coupled to the type conduit shown on the layout for that particular branch circuit. RMC shall have grounding bushings in enclosures.
8. If pole is painted, each separate painted piece shall have a bonding jumper attached to a tapped hole.
9. Sheet metal screws are not allowed for bonding. Provide 1/4-20 machine screws. Remove all non-conductive material at contact points. Terminate bonding jumper using listed device. Bonding jumper min. #6 AWG Copper. Make up all threaded bonding connections wrench tight.
10. Conduits entering enclosure from underground shall be sealed at both ends. Silicone sealant will not be allowed.
11. Ground rod clamp to be UL listed for direct burial. ⚠1
12. Service entrance conductors shall exit separately bushed non-metallic openings in weatherhead.
13. Free conductor at weatherhead to be 12 in. min., 18 in. max., or as required by utility. Color code grounded-neutral conductor with white tape covering 6 in. of conductor. Color code L1 or L2 Hot un-grounded conductor with red tape covering 6 in. of conductor. Service drop and service entrance conductors must not contact metal pole in such a manner as to result in abrasion of insulated conductors.
14. Conduit support spacing to be max. 3 ft. from ends, and max. 5 ft. in between.
15. Shop drawings are not required for service support structure unless specifically stated elsewhere or as directed by the Engineer.
16. Service enclosure to be labeled as specified on ED(5) VIII C.
17. Liquidtight flexible metal conduit (LFMC) may be used between the meter and service enclosure when they are mounted 90 to 180 degrees to each other. LFMC shall be the same size as service entrance conduit. LFMC shall not exceed 3 ft. and shall be securely supported within one foot of each end. LFMC shorter then 12" need not be strapped. Each end of LFMC must have a grounding bushing or be terminated with a grounding fitting. A neutral conductor must be installed within the LFMC. Bend in LFMC shall not exceed 180 degrees. A pull test is required on all installed conductors, at least six inches of free conductor movement shall be demonstrated to the satisfaction of the Engineer.

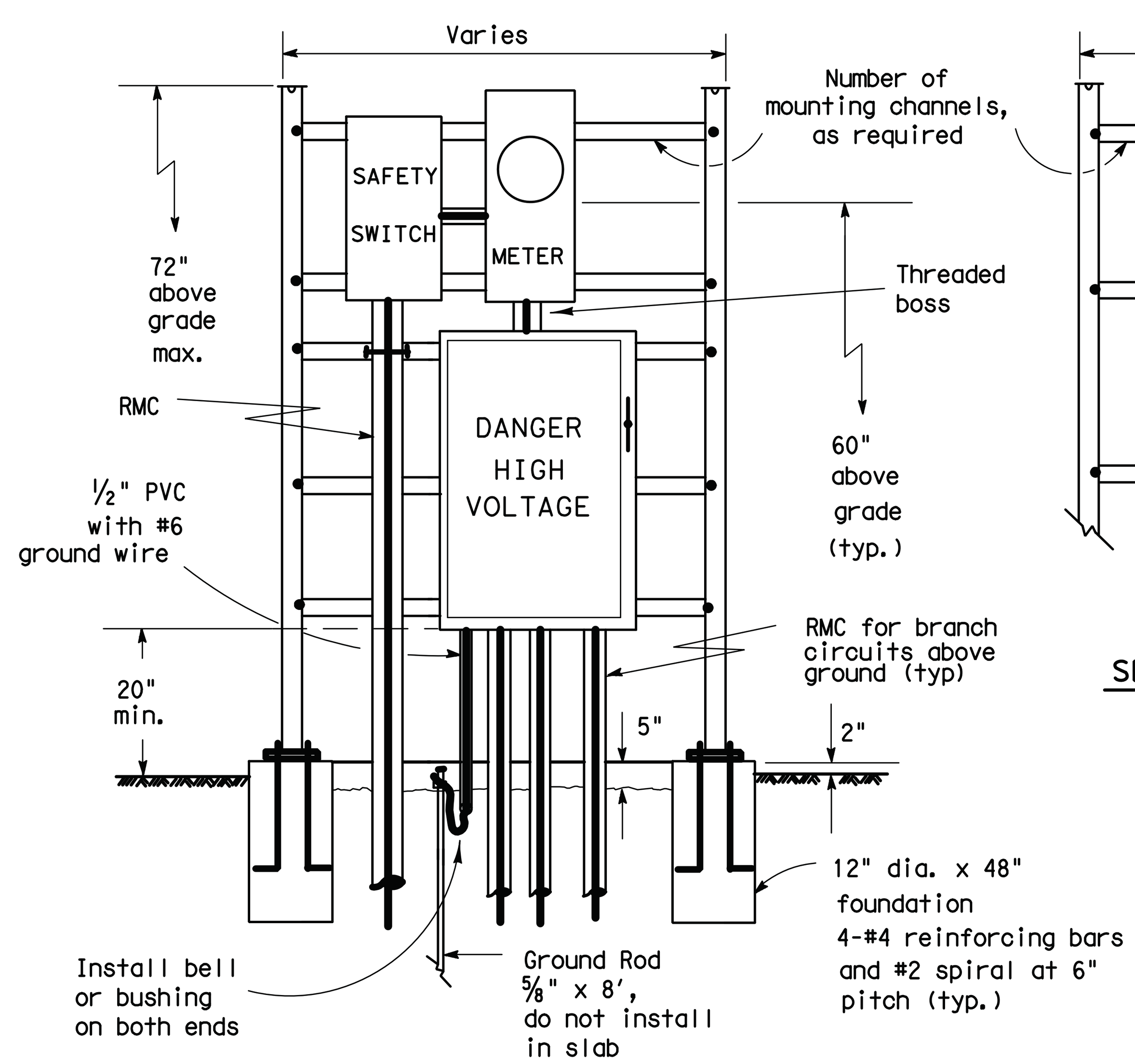

SERVICE SUPPORT TYPE SF (U)
UNDERGROUND SERVICE
WITH SAFETY SWITCH
(Typical Arrangement)

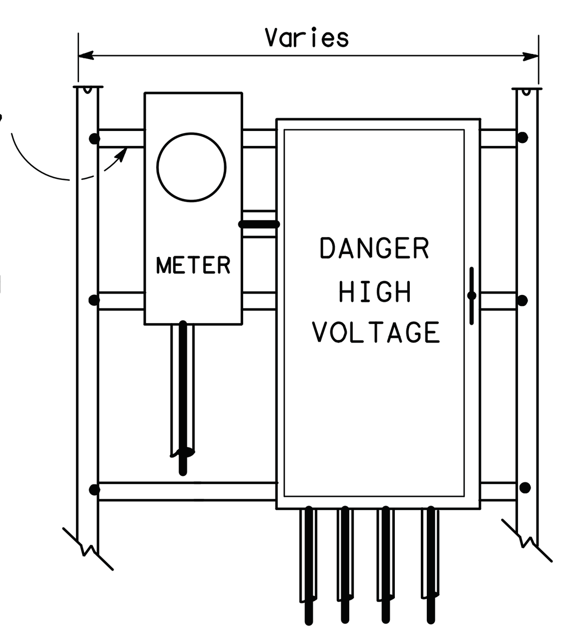

SERVICE SUPPORT TYPE SF (U)
UNDERGROUND SERVICE
WITHOUT SAFETY SWITCH

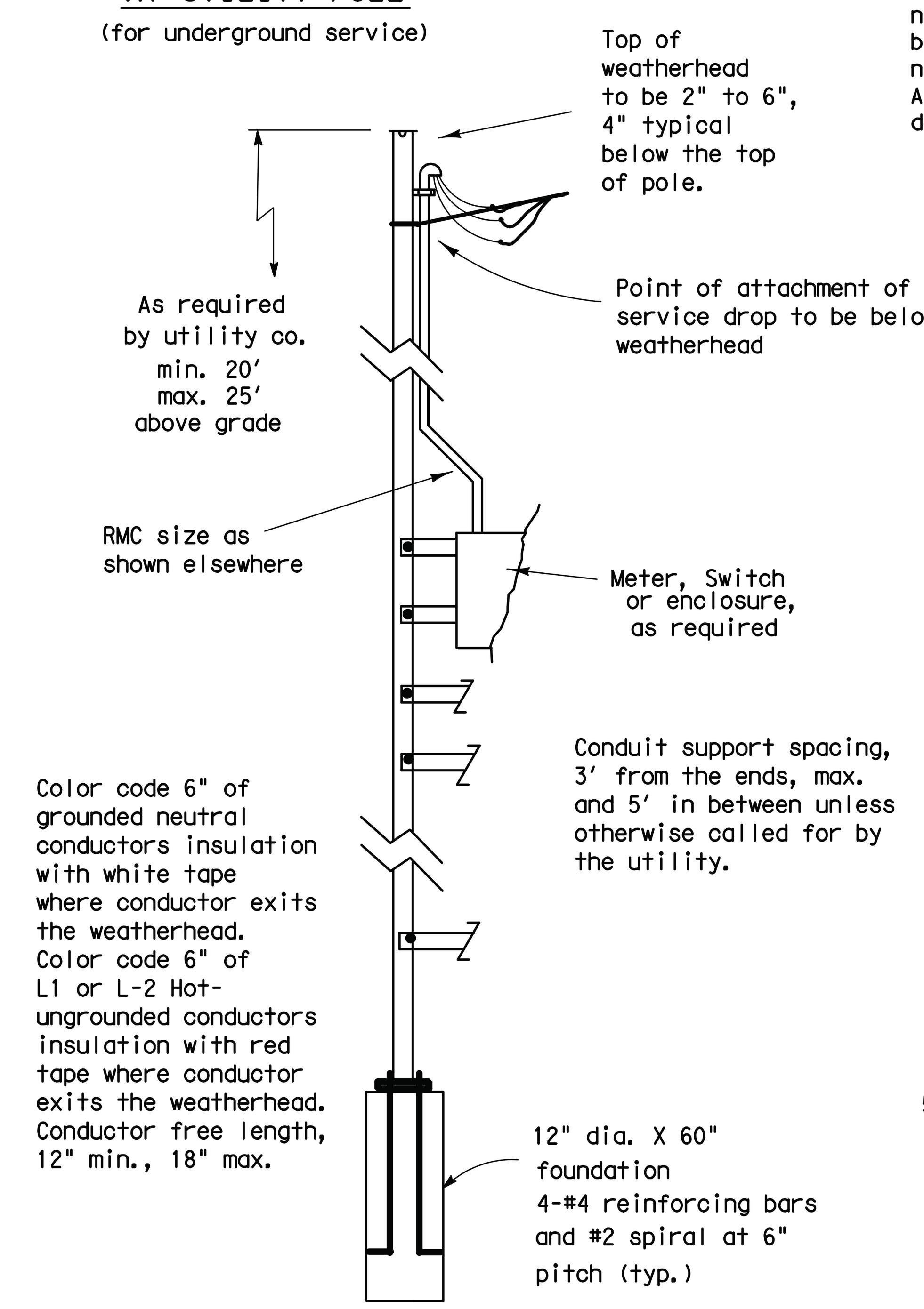

SERVICE SUPPORT TYPE SF (O)
OVERHEAD SERVICE

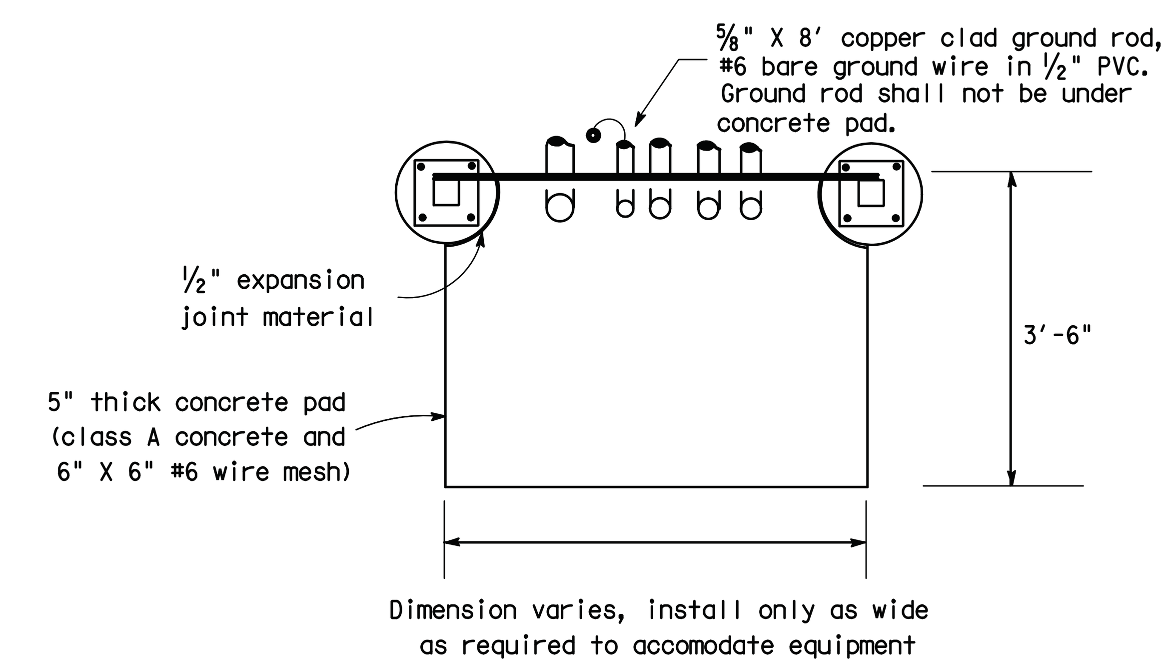

SERVICE SUPPORT TY SF (O) & SF (U)
TOP VIEW

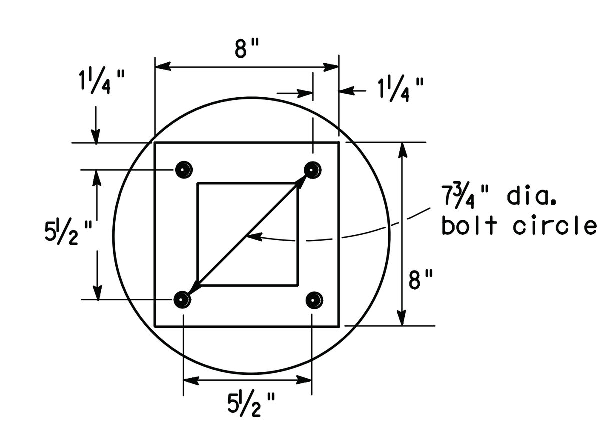

BASE PLATE DETAIL
TYPE SF & SP

5/03 Revision
⚠1 Revised notes.

Texas Department of Transportation
Traffic Operations Division

ELECTRICAL DETAILS-
SERVICE SUPPORT
TYPES SF & SP

ED(6)-03

© TxDOT January 1992	DN: TXDOT	CK: TXDOT	DW: TXDOT	CK: TXDOT
REVISIONS 4-98 12-00 3-03 5-03	CONT	SECT	JOB	HIGHWAY
	DIST	COUNTY		SHEET NO.

71F

REVISIONS	DATE
1	
2	
3	
4	

MTG engineers & surveyors
TBPE FIRM NO. F-354
5930 SUMMERHILL RD. | P.O. BOX 3786 TEXARKANA TEXAS 75501
P 903.838.8533 | F 903.832.4700 www.mtgengineers.com

PROJECT UNIVERSITY PH IV
DATE 2/28/14
DESIGNED BY
CHECKED BY
APPROVED BY

ELECTRICAL DETAILS-
SERVICE SUPPORT
TYPES SF & SP

PHASE IV UNIVERSITY
DEPART. OF ENGINEER & INFRASTRUCTURE
CITY OF TEXARKANA, TEXAS

DRAWING
SHEET 50a OF 50

DATE:
FILE:
X:\2011 Projects\116019 University Ave Phase 4, City of Texarkana, TX\05 Engineering Design\2014 Design\Design_07.pro
Mon Mar 17, 2014 8:43AM

RESOLUTION NO. 2014 - 042

A RESOLUTION OF THE CITY COUNCIL OF THE CITY OF TEXARKANA, TEXAS, ACCEPTING A BID AND AUTHORIZING THE CITY MANAGER TO ENTER INTO A CONTRACT WITH TATUM EXCAVATING COMPANY OF TEXARKANA, TEXAS FOR THE CONSTRUCTION OF PHASE IV TAMU EAST APPROACH IN AN AMOUNT NOT TO EXCEED TWO MILLION THREE HUNDRED TWENTY FIVE THOUSAND FIVE HUNDRED NINETY-FIVE DOLLARS ($2,325,595.00); AND ESTABLISHING AN EFFECTIVE DATE.

WHEREAS, proposals were opened April 24, 2014 for the construction of Phase IV TAMU East Approach from Summerhill Road west approximately 2,000 feet including a new roadway with drainage and utility improvements; and

WHEREAS, the bidder with the lowest and best bid was Tatum Excavating Company of Texarkana, Texas in an amount not to exceed TWO MILLION THREE HUNDRED TWENTY FIVE THOUSAND FIVE HUNDRED NINETY-FIVE DOLLARS ($2,325,595.00); and

WHEREAS, funds are available for this service through the 2009 bond fund.

NOW, THEREFORE, BE IT RESOLVED BY THE CITY COUNCIL OF THE CITY OF TEXARKANA, TEXAS:

SECTION 1: That the bid submitted by Tatum Excavating Company for the construction of Phase IV TAMU East Approach, per exhibit "A" be and is hereby accepted.

SECTION 2: That the City Manager be and is hereby authorized to enter into a contract with Tatum Excavating Company in an amount not to exceed TWO MILLION THREE HUNDRED TWENTY FIVE THOUSAND FIVE HUNDRED NINETY-FIVE DOLLARS ($2,325,595.00).

SECTION 3: That this Resolution shall be in full force and effect from and after its passage and approval.

PASSED AND APPROVED in Regular Council Session on this the 27th day of May, 2014.

ATTEST:

_____ _____

JENNIFER EVANS, CITY SECRETARY BOB BRUGGEMAN, MAYOR

Exhibit "A"

Phase IV TAMU East Approach Construction Project Bid Comparison	
DPW 14-1902-02	
Tatum Excavating Company	Texarkana Construction Company
$ 2,325,595.00	$ 2,367,001.13

City of Texarkana, Texas

Version: C

Briefing Sheet

Update Date: 4/3/2014 2:43 PM

Lead Department: City Manager **Action Officer:** John Whitson, City Manager

Subject: Ordinance No. 2014-048 amending Chapter 15, Offenses and Miscellaneous Provisions; of the Texarkana City Code by Prohibiting the sale to a minor of electronic Cigarettes and/or liquid nicotine and prohibiting self-service merchandising.

Briefing:	Public Hearing:	Second Briefing:	Council Vote:
5/27/2014	4/28/2014	May 12, 2014	5/27/2014

Item Schedule

Schedule 1: Brief twice - vote once (six weeks)

Updates/History of Briefing:

NOT APPLICABLE

Executive Summary and Background Information:

Summary: On 24 FEB 14 during a regular council meeting of the city council the city council discussed the subject of regulating the sales of E-Cigarettes. After discussion the consensus of the city council was for the staff to prepare an ordinance prohibiting the sale of E-Cigarettes to minors. The city manager researched a number of other city ordinances and has prepared an ordinance for the city council's consideration.

Background: Texarkana currently regulates smoking in public places which is codified in the city code in chapter 15, Section 20 (see ATTH 01). The proposed ordinance has been numbered to fit into the city code near the smoking regulation. Muni Code is currently reviewing and reworking the city code and this numbering will assist them in their rework of the city code.

I reviewed a number of city codes and ordinances wherein these cities are regulating the sales of E-Cigarettes and/or liquid nicotine. While the city council did not request that the ordinance include the regulation of the sale of liquid nicotine I found that other cities included it in their ordinances. I also found a recent report from the American Association of Poison Control Centers (AAPCC) reporting an uptick in the number of emergency room incidences of exposure to liquid nicotine especially cases involving youths (see ATTH 02).

I read a number of media articles reporting various cities and their deliberations. A list of the article headlines are provided at ATTH 05.

Potential Options:

- Adopt the ordinance as written
- Adopt an amended version of the ordinance
- Reject the ordinance as written
- Direct staff to rewrite the ordinance following additional guidance from the city council

Fiscal Implications:

None

City of Texarkana, Texas

Staff Recommendation:

Adopt the ordinance as written and presented

Advisory Board/Committee Review:

NONE

Board/Committee Recommendation:

NOT APPLICABLE

Advisory Board/Committee Meeting Date and Minutes:

NOT APPLICABLE

Attachments

a. 2014-048 Goals and Perspectives (DOCX)
b. 2014-048 ATTH 01 Texarkana Current Code Section 15-20(PDF)
c. 2014-048 ORD Prohibiting E-Cigarette Sales to Minors (PDF)
d. 2014-048 ATTH 02 E-Cigarette Devices and Liquid Nicotine AAPCC Alert (PDF)
e. 2014-048 ATTH 03 City of Frisco Ordinance (PDF)
f. 2014-048 ATTH 04 City of Lewisville E-cig Ordinance (PDF)
g. 2014-048 ATTH 05 Notes concerning E-Cig Sales (PDF)

Staff Coordination

City Manager	John Whitson	Department Head Review	Completed	04/03/2014 12:28 PM
Police	Dan Shiner	Review	Completed	04/03/2014 1:10 PM
Municipal Prosecutor	Deborah Jones	Review	Completed	04/07/2014 10:49 AM
City Attorney	Pam Burns	Review	Skipped	04/09/2014 3:18 PM
Public Works	Shirley Jaster	Review	Completed	04/09/2014 3:34 PM
Public Information Officer	Lisa Thompson	PIO Review	Completed	04/09/2014 3:35 PM
City Manager	John Whitson	City Manager Review	Completed	04/09/2014 4:07 PM
City Council	Jennifer Evans	Meeting	Completed	05/05/2014 3:25 PM

Meeting History

04/14/14	City Council	MOVED FORWARD	Next: 04/28/14
04/28/14	City Council	MOVED FORWARD	Next: 05/12/14
05/12/14	City Council	MOVED FORWARD	Next: 05/27/14

There were no updates given.

City of Texarkana, Texas

Developing Perspectives and Goals Pending Approval by the City Council:

Perspectives	Goals
Serve the Community	☐ Promote an Environmentally Sensitive & Livable Community ☑ Provide a Safe Community ☐ Deliver Quality Services ☑ Foster a Healthy Community
Run the Operations	☐ Enhance Community Preparedness & Responsiveness ☐ Maximize Partnership Opportunities ☐ Provide Courteous & Responsive Customer Service ☐ Model a Positive City Image ☐ Deliver Efficient Services ☐ Cultivate Community Involvement & Access
Manage the Resources	☐ Maintain Fiscal Strength ☐ Maximize Utilization & Resources ☐ Invest in Infrastructure & Transportation
Develop Personnel	☐ Develop a Skilled & Diverse Workforce ☐ Create a Positive & Rewarding Work Culture

Perspectives and Goals Additional Comments:

NONE

Resource Impact:

Staff time required if item is approved:	Low

Other Potential Impacts:

NONE APPLICABLE

Public Information Plan:

☐	Newspaper Notice (Required by Statute)	☐	Public Hearing (Required by Statute)
☐	Public Forum/Input Session	☑	Press Release
☑	E-News Distribution	☑	Website Notice
☐	Social Media (Twitter, Facebook, etc.)	☐	Special Mailing
☐	Flyers Posted	☐	Banners Posted
☐	Survey	☐	Automated Phone Call
☐	None Required	☐	

Other:

Attachment: 2014-048 Goals and Perspectives (1087 : Ord No. 2014-048 Prohibit E-Cigarette Sales to Minors)

Sec. 15-20. - Smoking prohibited in certain public areas.

(a) *Definitions.*

(1) *City-owned buildings* are those buildings or facilities that are operated, owned or managed in part or whole by the city.

(2) *Public service areas* are those areas of a city-owned building that are generally accessible to the public (i.e. hallways and common areas).

(3) *City-owned property* is any real property, other than buildings or facilities defined in section (1) above, that is maintained, managed, operated, or owned in whole or in part by the city.

(b) *Prohibition.* A person commits an offense if he smokes or possesses a burning tobacco, weed or other plant product in any of the following indoor or enclosed areas:

(1) The Texarkana, Texas, City Hall;

(2) The fire administrative offices;

(3) The living area and offices of the following Texarkana, Texas, fire stations:

a. Central Fire Station;

b. Summerhill Fire Station;

c. Oaklawn Fire Station;

d. Lake Drive Fire Station;

e. Richmond Road Fire Station;

(4) The Texarkana Public Library;

(5) The Texarkana-Bowie County Family Health Center;

(6) The street division complex;

(7) The sign and signal division building;

(8) The fleet services facility;

(9) Southwest Recreation Center;

(10) Collins Memorial Building;

(11) Spring Lake Park Maintenance Building;

(12) Concession stands located in the following locations:

a. Swanger Complex;

b. Karrh Park;

c. Dobson Field;

(13) Perot Theatre;

(14) Perot Annex;

(15) Central Warehouse;

(16) Texarkana Water Utility Main Office;

(17) New Boston Road Water Treatment Plant;

(18) Rollingwood Wastewater Treatment Plant;

(19) Wagner Creek Wastewater Treatment Plant;

(20) An elevator used by the public where posted "No Smoking";

(21) A hospital where posted "No Smoking";

(22)

Attachment: 2014-048 ATTH 01 Texarkana Current Code Section 15-20 (1087 : Ord No. 2014-048 Prohibit E-Cigarette Sales to Minors)

Any conference room, meeting room or public service area of any facility owned, operated or managed by the city where posted "No Smoking";

(23) Any facility of a public primary or secondary school, or an enclosed theater, movie house, library or museum where posted "No Smoking."

(c) *Prohibition.* A person commits an offense if that person smokes or possesses a burning tobacco, weed or other plant product or if that person uses or expectorates any smokeless tobacco product, including chewing tobacco of any type, any kind of tobacco suitable for chewing, snuff or other preparations of pulverized tobacco, or any other article or product that is made of tobacco on any of the following city-owned building, facility or property:

(1) The Texarkana-Bowie County Family Health Center and the real property on which the Texarkana-Bowie County Family Health Center is located.

The city council has the authority to determine whether the above-mentioned areas of city-owned, operated, maintained, and managed buildings, facilities, or property will be posted as a no smoking area or tobacco free zone. The sign to designate such no smoking area or tobacco free zone shall contain the words "No Smoking" or "Tobacco Free Zone" and the size and shape must be approved by the city council.

(d) *Defense.* It is a defense to prosecution under this section if the city-owned building, facility, or property in or on which the offense takes place does not have prominently displayed a reasonably sized notice that smoking is prohibited or that the building, facility, or property is a tobacco free zone.

(e) *Penalty.* Any person violating any provision of this section shall be deemed guilty or a misdemeanor and upon conviction in the municipal court of Texarkana, Texas, shall be fined not more than two hundred dollars ($200.00). Each day of any such violation shall be deemed a separate offense.

(Ord. No. 16-86, § 1, 1-13-86; Ord. No. 1-94, § 1, 1-10-94; Ord. No. 201-94, § 1, 7-11-94; Ord. No. 225-2000, §§ 1—3, 8-14-00; Ord. No. 280-2000, § 1, 9-15-00)

Sec. 15-20.001. - Definitions.

The following words and phrases, whenever used in sections 15-20.001 through 15-20.016, shall be construed as defined in this section:

(1) "Bar" means an establishment that is devoted to the serving of alcoholic beverages for consumption by guests on the premises and in which the serving of food is only incidental to the consumption of those beverages, including but not limited to, taverns, nightclubs, cocktail lounges, and cabarets.

(2) "Business" means a sole proprietorship, partnership, joint venture, corporation, or other business entity formed for profit-making purposes, including retail establishment where goods or services are sold as well as professional corporations and other entities where legal, medical, dental, engineering, architectural, or other professional services are delivered.

(3) "Employee" means a person who is employed by an employer in consideration for direct or indirect monetary wages or profit and a person who volunteers his or her services for a non-profit entity.

(4) "Employer" means a person, business, partnership, association, corporation, including municipal corporation, trust, or non-profit entity that employs the services of one of more individual persons.

(5)

Attachment: 2014-048 ATTH 01 Texarkana Current Code Section 15-20 (1087 : Ord No. 2014-048 Prohibit E-Cigarette Sales to Minors)

"Enclosed area" means all space between a floor and ceiling that is enclosed on all sides by a solid walls or windows (exclusive of doorways), which extend from the floor to the ceiling.

(6) "Health care facility" means an office or institution providing care or treatment of diseases, whether physical, mental, or emotional, or other medical, physiological, or psychological conditions, including but not limited to, hospitals, rehabilitation hospitals or other clinics, including weight control clinics, nursing homes, homes for the aging or chronically ill, laboratories, and offices of surgeons, chiropractors, physical therapists, physicians, dentists, and all specialists within these professions. This definition shall include all waiting rooms, hallways, private rooms, semiprivate rooms, and wards within health care facilities.

(7) "Place of employment" means an area under the control of a public or private employer that employees normally frequent during the course of employment, including, but not limited to work areas, employee lounges, restrooms, conference rooms, meeting rooms, classrooms, employee cafeterias, hallways, and vehicles. A private residence is not a "place of employment" unless it is used as a child care, adult day care, or health care facility.

(8) "Public place" means an enclosed area to which the public is invited or in which the public is permitted, including but not limited to, banks, bars, educational facilities, health care facilities, laundromats, public transportation facilities, reception areas, restaurants, retail food production and marketing establishments, retail service establishments, retail stores, shopping malls, sports arenas, theaters, and waiting rooms. A private residence is not a "public place" unless it is used as a child care, adult day care, or health care facility.

(9) "Restaurant" means an eating establishment, including but not limited to, coffee shops, cafeterias, sandwich stands, and private and public school cafeterias, which gives or offers for sale food to the public, guests, or employees, as well as kitchens and catering facilities in which food is prepared on the premises for serving elsewhere. The term "restaurant" shall include a bar area within the restaurant.

(10) "Retail tobacco store" means a retail store utilized primarily for the sale of tobacco products and accessories and in which the sale of other products is merely incidental.

(11) "Service line" means an indoor line in which one (1) or more persons are waiting for or receiving service of any kind, whether or not the service involves the exchange of money.

(12) "Shopping mall" means an enclosed public walkway or hall area that serves to connect retail or professional establishments.

(13) "Smoking" means inhaling, exhaling, burning, or carrying any lighted cigar, cigarette, pipe, weed, plant, or other combustible substance in any manner or in any form.

(14) "Sports arena" means sports pavilions, stadiums, gymnasiums, health spas, boxing arenas, swimming pools, roller and ice rinks, bowling alleys, and other similar places where members of the general public assemble to engage in physical exercise, participate in athletic competition, or witness sports or other events.

(15) "City-owned buildings" means those buildings or facilities that are operated, owned or managed in part or whole by the city.

(16) "Minor" means persons age seventeen (17) and below.

(17) "Public area" means the area of a public place in which the public is generally permitted to enter or occupy by express or implied invitation of the owner/operator.

(18)

Attachment: 2014-048 ATTH 01 Texarkana Current Code Section 15-20 (1087 : Ord No. 2014-048 Prohibit E-Cigarette Sales to Minors)

"Non-public area" means the area of a public place in which the public is not generally permitted access by express or implied invitation and/or in which the public is expressly prohibited from entering or occupying.

(19) "Bingo facility" means any facility used for the purpose of operating bingo gaming by a person or entity licensed by the Bingo Enabling Act.

(Ord. No. 162-04, § 1, 8-23-04)

Sec. 15-20.002. - Application of article to city-owned facilities.

All enclosed facilities, including buildings and vehicles owned, leased, or operated by the City of Texarkana, Texas, shall be nonsmoking at all times notwithstanding other provisions of sections 15-20.001 through 15-20.016.

(Ord. No. 162-04, § 1, 8-23-04)

Sec. 15-20.003. - Prohibition of smoking in public places.

Smoking shall be prohibited in all enclosed public places within the City of Texarkana, Texas, including but not limited to, the following places:

(1) Any public facility, place, building, or vehicle where minors are permitted to enter or ride.

(2) Aquariums, galleries, libraries, museums and zoo facilities and grounds.

(3) Areas available to and customarily used by the general public in businesses and non-profit entities patronized by the public, including but not limited to, attorneys' offices and other professional offices, banks, laundromats, hotels, and motels.

(4) Convention facilities.

(5) Elevators.

(6) Facilities primarily used for exhibiting any motion picture, stage, drama, lecture, musical recital, or other similar performance; however, smoking which is a part of a stage performance is permitted.

(7) Health care facilities except bed space facilities where smoking is ordered by an attending physician in keeping with the guidelines established by the facility.

(8) Licensed child care and adult day care facilities.

(9) Lobbies, hallways, and other common areas in apartment buildings, condominiums, trailer parks, retirement facilities, nursing homes, and other multiple-unit residential facilities.

(10) Polling places.

(11) Public transportation facilities, including buses, bus terminals, taxicabs, train stations, airports and other facilities and means of public transit under the authority of the City of Texarkana, Texas, as well as ticket, boarding, and waiting areas of public transit depots.

(12) Restaurants.

(13) Restrooms, lobbies, reception areas, hallways, and other common-use areas.

(14) Retail stores.

(15) Every room, chamber, places of meeting or public assembly, including school buildings under the control of any board, council, commission, committee, including joint committees, or agencies of the city or any political subdivision of the state during

Attachment: 2014-048 ATTH 01 Texarkana Current Code Section 15-20 (1087 : Ord No. 2014-048 Prohibit E-Cigarette Sales to Minors)

such time as a public meeting is in progress, to the extent such place is subject to the jurisdiction of the city.

(16) Service lines.

(17) Shopping malls.

(18) Sports arenas and convention halls, including bowling facilities and outdoor arenas.

(19) The living area and offices of the Texarkana, Texas, fire stations.

(20) Concession stands.

(21) Training facilities that house residents in private and group rooms.

(Ord. No. 162-04, § 1, 8-23-04)

Sec. 15-20.004. - Prohibition of smoking in places of employment.

(a) An employer may prohibit smoking in a workplace, or the employer may permit smoking in a workplace as provided by this article.

(b) An employee (or employer) may not smoke in a workplace except in a designated employee smoking area.

(c) Written policy required.

(1) An employer must adopt a written smoking policy. If smoking is to be permitted, the policy must include provisions that comply with this article.

(2) The employer must communicate the policy to each employee and to each new employee.

(3) The employer must post the policy in the workplace within three weeks of its adoption.

(d) Designated smoking area.

(1) An employer that permits smoking in the workplace shall designate one (1) or more smoking areas for use by its employees. An employee smoking area may include a private enclosed office.

(2) A designated smoking area:

a. Must be located in an area accessible to employees but not accessible to the general public except by express invitation of the employer or an employee; and

b. Must meet the provisions of section 15-20.006(5)

(3) A designated smoking area may not:

a. Include an area with a food or drink dispensing facility intended for use by all employees;

b. Include a restroom commonly use by nonsmoking employees; or

c. Be located in a common employee work area.

(e) Sign required. An employer shall post a sign in each employee smoking area stating that the area is a designated smoking area. The sign must be visible to employees and to the public.

(Ord. No. 162-04, § 1, 8-23-04)

Sec. 15-20.005. - Reasonable distance.

Smoking is prohibited within a reasonable distance of ten (10) feet outside an enclosed area where smoking is prohibited so as to insure that tobacco smoke does not enter the area through entrances, windows, ventilation systems, or other means.

(Ord. No. 162-04, § 1, 8-23-04)

Attachment: 2014-048 ATTH 01 Texarkana Current Code Section 15-20 (1087 : Ord No. 2014-048 Prohibit E-Cigarette Sales to Minors)

Sec. 15-20.006. - Where smoking not regulated.

Notwithstanding any other provision of sections 15-20.001 through 15-20.016 to the contrary, the following areas shall be exempt from the provisions of sections 15-20.003 and 15-20.004:

(1) Private residences, except when used as a licensed child care, adult day care, or health care facility.

(2) Private vehicles, except when used in conjunction with a licensed day care, adult day care facility, or health care facility.

(3) Hotel and motel rooms that are rented to guests and are designated as smoking rooms; provided, however, that not more than twenty (20) per cent of rooms rented to guests in a hotel or motel may be so designated.

(4) Outdoor areas of places of employment except those covered by the provisions of section 15-20.005

(5) Designated smoking areas.

The owner/operator of a public place may establish a designated public smoking area within a public area and/or a designated employee smoking area within a non-public area of a public place in compliance with the following specifications:

a. *Separate ventilation.* The designated smoking area must be equipped with a physical barrier that separates the designated smoking area from the nonsmoking area with a separate ventilation. The physical barrier must form an effective membrane continuous from outside wall to outside wall, from smoke barrier to smoke barrier, from floor to floor or roof above, or a combination thereof, including continuity through all concealed spaces, such as above suspended ceilings, interstitial structural and mechanical spaces. Transfer grilles, louvers and similar openings shall not be used in these partitions. Self-closing, tight fitting doors are permitted in such barriers.

b. *Negative pressure.* The ventilation system must be a HVAC system designed by a licensed professional engineer to have negative pressure on the area designated for smoking to prevent air from a smoking area to be drawn across or into a nonsmoking area and to have sufficient capacity to remove tobacco smoke from the interior of the building at the rate of one (1) cubic foot per minute per square foot of area.

c. *Access to designated smoking area.* The designated smoking area shall not be positioned in a location that would require anyone entering through the main entrance of the building to pass through the designated smoking area.

d. *Restrooms.* If restroom areas are not provided in both the smoking and nonsmoking designated areas, they shall be located in the nonsmoking area such that nobody attempting to access the restrooms will be required to enter into the designated smoking area.

e. *Square footage limitation on designated smoking areas.*

(i) Public areas. The designated smoking area located in a public area of a public place, except for a bingo facility, shall not exceed twenty-five (25) per cent of the square footage of the combined public areas within the public place.

(ii)

Attachment: 2014-048 ATTH 01 Texarkana Current Code Section 15-20 (1087 : Ord No. 2014-048 Prohibit E-Cigarette Sales to Minors)

Bingo facilities. The designated smoking area located in a public area of a bingo facility, where minors are permitted, shall not exceed eighty (80) per cent of the square footage of the public area.

(iii) Employee smoking areas. A designated employee smoking area located within a non-public area of a public place shall not be restricted as to area so long as it otherwise complies with the provision of this section and section 15-20.004

(6) Outdoor patio areas beyond ten (10) feet of a public entrance of any establishment or facility where food is served.

(7) Retail tobacco stores.

(8) Nightclubs and bars, however, such facilities shall be required to install a commercial air cleaning system having sufficient capacity to remove tobacco smoke from the interior of the building at the rate of one (1) cubic foot per minute per square foot of area.

(9) Bingo facilities that prohibit minors from entering or occupying the premises during public hours.

(Ord. No. 162-04, § 1, 8-23-04)

Sec. 15-20.007. - Declaration of establishment as nonsmoking.

Notwithstanding any other provision of sections 15-20.001 through 15-20.016, an owner, operator, manager, or other person in control of an establishment, facility, or outdoor area may declare that entire establishment, facility, or outdoor area as a nonsmoking place. Smoking shall be prohibited in any place in which a sign conforming to the requirements of subsection 15-20.008(a) is posted.

(Ord. No. 162-04, § 1, 8-23-04)

Sec. 15-20.008. - Posting of signs.

(a) "No Smoking" signs or the international "No Smoking" symbol (consisting of a pictorial representation of a burning cigarette enclosed in a red circle with a red bar across it) shall be clearly and conspicuously posted in every public place and place of employment where smoking is prohibited by sections 15-20.001 through 15-20.016, by the owner, operator, manager, or other person in control of that place. The lettering of the sign will be not less than one (1) inch in height.

(b) Every public place and place of employment where smoking is prohibited by sections 15-20.001 through 15-20.016 shall have posted at every entrance a conspicuous sign clearly stating that smoking is prohibited.

(c) All ashtrays and other smoking paraphernalia shall be removed from any area where smoking is prohibited by sections 15-20.001 through 15-20.016 by the owner, operator, manager, or other person having control of the area.

(Ord. No. 162-04, § 1, 8-23-04)

Sec. 15-20.009. - Minors prohibited from entering smoking areas.

Notwithstanding any other provision to the contrary, minors are prohibited from entering any designated public smoking area, any designated employee smoking area, and/or any other area where smoking is not regulated pursuant to sections 15-20.001 through 15-20.016.

Attachment: 2014-048 ATTH 01 Texarkana Current Code Section 15-20 (1087 : Ord No. 2014-048 Prohibit E-Cigarette Sales to Minors)

(Ord. No. 162-04, § 1, 8-23-04)

Sec. 15-20.010. - Enforcement.

(a) The building official of the city shall be responsible for compliance with sections 15-20.001 through 15-20.016. The police department and/or fire department may, while an establishment is undergoing inspections, inspect for compliance with sections 15-20.001 through 15-20.016

(b) The owner, operator, person in charge or manager of any facility, business or agency within the purview of this section shall comply with the provisions of this section.

(c) Notwithstanding any other provision of sections 15-20.001 through 15-20.016, an employee or private citizen may bring legal action to enforce sections 15-20.001 through 15-20.016, provided, however, that the exclusive remedy for private enforcement is by injunctive relief.

(d) The building official, in his sole discretion, may enforce this section by any of the following actions:

(1) Serving written notice on the owner, operator, person in charge or manager of any facility, business or agency within the purview of this section requiring the correction within a reasonable specified time frame of any violation of this section;

(2) Requesting the city attorney to maintain an action for injunction to enforce the provisions of this section, to cause the correction of any such violation and for assessment and recovery of a civil penalty of such violation including attorney's fees; or

(3) Issuing a municipal court citation.

The remedies contained herein are cumulative of and in addition to any other remedies that are available to Texarkana, Texas, at law or in equity.

(e) In undertaking the enforcement of this section, Texarkana, Texas, is assuming an undertaking only to promote the general health, safety and welfare of it citizens. Texarkana, Texas, is not assuming any duty or obligation, nor is it imposing any duty and/or obligation on its officer and/or employees, nor is it liable in money damage or otherwise to any person who claims that:

(1) Texarkana, Texas, and/or one (1) of its officers and/or employees breached any such obligation; and

(2) The breach proximately caused injury.

(Ord. No. 162-04, § 1, 8-23-04)

Sec. 15-20.011. - Violations and penalties.

(a) A person who smokes in an area where smoking is prohibited by the provisions of sections 15-20.001 through 15-20.016 shall be guilty of an infraction, punishable by a fine not exceeding two hundred dollars ($200.00). Each day of any such violation shall be deemed a separate offense.

(b) A person who owns, manages, operates, or otherwise controls a public place or place of employment and who fails to comply with the provisions of sections 15-20.001 through 15-20.016 shall be guilty of an infraction, punishable by:

(1) A fine not exceeding fifty dollars ($50.00) for a first violation.

(2) A fine not exceeding one hundred dollars ($100.00) for a second violation within one (1) year of the previous violation.

(3)

Attachment: 2014-048 ATTH 01 Texarkana Current Code Section 15-20 (1087 : Ord No. 2014-048 Prohibit E-Cigarette Sales to Minors)

A fine not exceeding two hundred fifty dollars ($250.00) for each additional violation within one (1) year of the previous violation.

(c) Each day on which a violation of sections 15-20.001 through 15-20.016 occurs shall be considered a separate and distinct violation.

(Ord. No. 162-04, § 1, 8-23-04)

Sec. 15-20.012. - Public education.

The city manager shall engage in a continuing program to explain and clarify the purposes and requirements of sections 15-20.001 through 15-20.016 to citizens effected by it, and to guide owners, operators, and managers in their compliance with it. The program may include publication of a brochure for effected businesses and individuals explaining the provisions of sections 15-20.001 through 15-20.016.

(Ord. No. 162-04, § 1, 8-23-04)

Sec. 15-20.013. - Governmental agency cooperation.

The city manager shall annually request other governmental and educational agencies having facilities within the city to establish local operating procedures in cooperation and compliance with sections 15-20.001 through 15-20.016. This includes urging all federal, state, city, and school district agencies to update their existing smoking control regulations to be consistent with the current health findings regarding secondhand smoke.

(Ord. No. 162-04, § 1, 8-23-04)

Sec. 15-20.014. - Other applicable laws.

Sections 15-20.001 through 15-20.016 shall not be interpreted or construed to permit smoking where it is otherwise restricted by other applicable laws.

(Ord. No. 162-04, § 1, 8-23-04)

Sec. 15-20.015. - Liberal construction.

Sections 15-20.001 through 15-20.016 shall be liberally construed so as to further their purposes.

(Ord. No. 162-04, § 1, 8-23-04)

Sec. 15-20.016. - Severability.

If any provision, clause, sentence, paragraph, or word of sections 15-20.001 through 15-20.016 or the application thereof to any person or circumstances shall be held invalid, that invalidity shall not affect the other provisions of sections 15-20.001 through 15-20.016 which can be given effect without the invalid provision or application, and to this end the provisions of sections 15-20.001 through 15-20.016 are declared to be severable.

(Ord. No. 162-04, § 1, 8-23-04)

Attachment: 2014-048 ATTH 01 Texarkana Current Code Section 15-20 (1087 : Ord No. 2014-048 Prohibit E-Cigarette Sales to Minors)

ORDINANCE NO. 2014 - 048

AN ORDINANCE OF THE CITY COUNCIL OF THE CITY OF TEXARKANA, TEXAS, AMENDING CHAPTER 15, OFFENSES AND MISCELLANEOUS PROVISIONS; OF THE TEXARKANA CITY CODE BY PROHIBITING THE SALE TO A MINOR OF ELECTRONIC CIGARETTES AND/OR LIQUID NICOTINE AND PROHIBITING SELF-SERVICE MERCHANDISING; PROVIDING DEFENSES; PROVIDING FOR A PENALTY CLAUSE; PROVIDING FOR PUBLICATION; PROVIDING FOR A REPEALER CLAUSE; PROVIDING A SEVERABILITY CLAUSE; AND ESTABLISHING AN EFFECTIVE DATE.

WHEREAS, electronic cigarettes ("e-cigarettes") are devices that deliver, among other things, nicotine through vapor that is inhaled by the user; and

WHEREAS, in the Tobacco Control Act, Congress recognized that nicotine is an addictive drug; and

WHEREAS, the U.S. Food and Drug Administration ("FDA") acknowledges that the safety and efficacy of e-cigarettes have not been fully studied; therefore, consumers have no way of knowing, among other things, whether e-cigarettes are safe for their intended use or how much nicotine or other potentially harmful chemicals are being inhaled during use; and

WHEREAS, the FDA has also noted that e-cigarettes are marketed and sold to young people and are available in different flavors, such as chocolate and mint, which may appeal to young people; and

WHEREAS, e-cigarettes are not yet regulated by state or federal law; and

WHEREAS, that new unregulated high-tech smoking devices, commonly referred to as electronic cigarettes or e-cigarettes, have recently become more available to consumers; and

WHEREAS, nicotine is a known neurotoxin that is also one of the most highly addictive substances available for public consumption; and

WHEREAS, manufacturers and marketers of electronic cigarettes or e-cigarettes purposefully and intentionally advertise their products as safe nicotine delivery devices and smoking cessation modalities; and

WHEREAS, studies show that adolescents can become addicted to nicotine after ingesting the equivalent of twenty (20) traditional cigarettes, the amount traditionally available in a single pack, and the appeal created by the flavored electronic cigarettes, e-cigarettes and/or liquid nicotine can lead young people into a lifetime of nicotine addiction; and

WHEREAS, the nicotine content provided by electronic cigarettes or e-cigarettes is unknown and unspecified and presents a significant risk of rapid addiction or overdose; and

WHEREAS, the American Association of Poison Control Centers (AAPCC) reports a recent uptick in calls about exposures to e-cigarette devices and liquid nicotine with slightly more than half of these

reported exposures have occurred in young children under the age of six (not inconsistent with National Poison Data System exposures to all substances combined); and

WHEREAS, some children and toddlers who come in contact with e-cigarette devices or liquid nicotine have become very ill; some even requiring emergency room visits with nausea and vomiting being the most significant symptoms; and

WHEREAS, the City Council has determined that a ban on the sale of electronic cigarettes, e-cigarettes, liquid nicotine and like products in the City to persons under the age of eighteen (18) and a prohibition on self-service merchandising in the retail sale of electronic cigarettes, e-cigarettes, liquid nicotine and like products in order to minimize their physical accessibility to minors serves an important public interest in furtherance of the health, safety, and welfare of the citizens of the City; and

WHEREAS, the City Council has determined that protecting the citizens of the City against an untested nicotine product like electronic cigarettes, e-cigarettes and liquid nicotine represents sound public health and fiscal policy;

NOW, THEREFORE, BE IT ORDAINED BY THE CITY COUNCIL OF THE CITY OF TEXARKANA, TEXAS:

SECTION 1: Chapter 15 of the Texarkana City Code is hereby amended as follows:

In **Sec. 15-20.001. – Definitions.** add the following definitions alphabetically and renumber items 1-19 to be items 1-25:

"*Electronic Cigarette*" or "*E-cigarette*" means any device that uses an atomizer or similar device that allows users to inhale a vapor of liquid nicotine or other vapor without the use of fire, smoke, ash or carbon monoxide and includes any of its component parts and regardless of the details of the product appearance or marketed name.

"*Liquid Nicotine*" shall mean any liquid product composed either in whole or in part of nicotine, propylene glycol and/or other substance and manufactured for use with e-cigarettes.

"*Minor*" shall mean any individual younger than eighteen (18) years of age.

"*Person*" shall mean an individual, corporation, partnership, wholesaler, retailer or any licensed or unlicensed business.

"*Proof of Identification*" shall mean identification that contains a physical description and photograph consistent with the person's appearance, purports to establish that the person is 18 years of age or older and was issued by a governmental agency. The proof of identification may include a driver's license issued by this state or another state, a passport or an identification card issued by a state or federal government.

"*Vaping*" shall mean to inhale (breath into the lungs) the vapor produced by an electronic cigarette or any other similar vapor delivery device.

Add **Sec. 15-20A E-Cigarette Regulations.**

A. *Purpose*. The purpose of this section is to prohibit the sale to minors, of e-cigarettes and liquid nicotine, both defined in Sec 15-20.001, within the city limits of the City of Texarkana.

B. Sale, distribution, or offering for sale to minor.
   a. *Offense*. It shall be unlawful for any person to give, sell, or offer for sale an e-cigarette, liquid nicotine or sample to a minor within the territorial limits of the City of Texarkana.
   b. *Defenses*. It shall be a defense to the above offense if:
      i. the minor is in the presence of a parent, guardian, spouse or other adult to whom the minor had been committed by a court; or
      ii. the minor presents an apparently valid proof of identification.

C. Vendor-Assisted Sales Required. Self-Service Merchandising Prohibited.
   a. *Offense*. A retailer or other person may not:
      i. offer e-cigarettes or liquid nicotine for sale in a manner that permits a customer direct access to the e-cigarettes or liquid nicotine; or
      ii. offer for sale or display for sale e-cigarettes or liquid nicotine by means of self-service merchandising; or
      iii. install or maintain an open display unit containing e-cigarettes or liquid nicotine.
   b. *Defenses*. It shall be a defense to the above offense if:
      i. the facility or business is not open to persons younger than 18 years of age at any time; or
      ii. the open display unit is located in an area that is inaccessible to customers.

D. *Penalty for Violation*. Any person violating any provisions of subsections (B) or (C) of this section shall be deemed guilty of a misdemeanor and upon conviction in the municipal court of the City of Texarkana, Texas, shall be fined not more than two hundred dollars ($200.00).

SECTION 2: That the City Secretary be and is hereby directed to publish the caption of this Ordinance for three (3) successive days in the Texarkana Gazette within ten (10) days of the passage of this Ordinance, as provided in Article XI, Section 3 of the Charter of the City of Texarkana, Texas.

SECTION 3: That in case a section, clause, sentence or part of this Ordinance shall be deemed or adjudged by a Court of competent jurisdiction to be invalid, then such invalidity shall not affect, impair or invalidate the remainder of this Ordinance.

SECTION 4: That all ordinances or parts of ordinances in conflict herewith are specifically repealed to the extent of such conflict.

SECTION 5: That this Ordinance shall be in full force and effect ten (10) days after its passage an approval.

PASSED AND APPROVED in Regular Council Session on this the ___ day of ___, 2014.

ATTEST:

_____ _____

JENNIFER EVANS, CITY SECRETARY BOB BRUGGEMAN, MAYOR

Attachment: 2014-048 ORD Prohibiting E-Cigarette Sales to Minors (1087 : Ord No. 2014-048 Prohibit E-Cigarette Sales to Minors)

E-Cigarette Devices and Liquid Nicotine

Local poison centers report an uptick in electronic cigarettes and liquid nicotine exposures.

Poison centers are reporting a recent uptick in calls about exposures to e-cigarette devices and liquid nicotine.

Slightly more than half of these reported exposures have occurred in young children under the age of six. However, this is consistent with National Poison Data System exposures to all substances combined. Some children and toddlers who come in contact with e-cigarette devices or liquid nicotine have become very ill; some even requiring ER visits with nausea and vomiting being the most significant symptoms. Adults should use care to protect their skin when handling the products, and they should be out of sight and out of the reach of children. Additionally, those using these products should dispose of them properly to prevent exposure to pets and children from the residue or liquid left in the container.

The American Association of Poison Control Centers recommends the following steps:

- Protect your skin when handling the products.

308%

GREATER

2013 vs. 2012 E-cigarette Devices and Liquid Nicotine Reported Exposures

Attachment: 2014-048 ATTH 02 E-Cigarette Devices and Liquid Nicotine AAPCC Alert (1087 : Ord No. 2014-048 Prohibit E-Cigarette Sales to

- Always keep e-cigarettes and liquid nicotine locked up and out of the reach of children.
- Follow the specific disposal instructions on the label.
- If you think someone has been exposed to an e-cigarette or liquid nicotine, call your local poison center at 1-800-222-1222 immediately.

Through March 24, 2014, AAPCC has received 651 e-cigarette devices and liquid nicotine reported exposures.

PLEASE NOTE: All NPDS data reported by the American Association of Poison Control Centers for 2013 and 2014 is considered preliminary because it is possible that a poison center may update a case anytime during the year if new information is obtained.

E-cigarette Device and Liquid Nicotine Reported Exposures to Poison Centers

2011201220132014040080 01,2001,600

RELATED TOPICS

Adults ›

Children ›

Poison Control in Action ›

Teens ›

FOR MORE INFORMATION

1-800-222-1222

For Media: 703-894-1858

RELATED PRESS RELEASES

AAPCC and Poison Centers Issue Warning About Electronic Cigarette Devices and Liquid Nicotine ›

FIND YOUR LOCAL POISON CENTER

Poison centers offer free, private, confidential medical advice 24 hours a day, 7 days a week. You can reach your local poison center by calling 1-800-222-1222.

Search

View all Poison Control Centers

Attachment: 2014-048 ATTH 02 E-Cigarette Devices and Liquid Nicotine AAPCC Alert (1087 : Ord No. 2014-048 Prohibit E-Cigarette Sales to

CITY OF FRISCO, TEXAS **ORDINANCE NO. _____**

AN ORDINANCE OF THE CITY OF FRISCO, TEXAS, AMENDING FRISCO'S CODE OF ORDINANCES NO. 06-03-31, CHAPTER 54 (OFFENSES AND MISCELLANEOUS PROVISIONS), ARTICLE II (REGULATION OF SMOKING), DIVISION 1 (SMOKING), SECTION 54-19 (DEFINITIONS); ADDING DIVISION 3 (ELECTRONIC CIGARETTES AND/OR E-CIGARETTES AND LIQUID NICOTINE) TO ESTABLISH REGULATIONS RELATING TO ELECTRONIC CIGARETTES AND/OR E-CIGARETTES AND LIQUID NICOTINE; PROVIDING FOR REPEALING, SAVINGS AND SEVERABILITY CLAUSES; PROVIDING FOR AN EFFECTIVE DATE OF THIS ORDINANCE; AND PROVIDING FOR THE PUBLICATION OF THE CAPTION HEREOF.

WHEREAS, the City Council of the City of Frisco, Texas ("City Council") has investigated and determined that the City of Frisco, Texas' ("City") Code of Ordinances No. 06-03-31, as amended, ("Code of Ordinances") Chapter 54 (Offenses and Miscellaneous Provisions), Article II (Regulation of Smoking), Division 1 (Smoking), Section 54-19 (Definitions) should be amended as set forth herein; and

WHEREAS, the City Council has further investigated and determined that the Code of Ordinances, Chapter 54 (Offenses and Miscellaneous Provisions) should be amended to add Division 3 (Electronic Cigarettes and/or E-Cigarettes and Liquid Nicotine) for the purpose of establishing regulations relating to electronic cigarettes and/or e-cigarettes and liquid nicotine as set forth herein; and

WHEREAS, the City Council has further investigated and determined that the state and federal governments have been slow to respond meaningfully to the public health crisis caused by smoking, and to implement measures to curb smoking and its inherent dangerous effects on the general public's health; and

WHEREAS, the City Council has further investigated and determined that the dangers posed by tobacco are not limited to cigarettes, pipes or other traditional forms of smoking; and

WHEREAS, the City Council has further investigated and determined that the new, unregulated high-tech smoking devices, commonly referred to as electronic cigarettes or e-cigarettes, have recently become more available to consumers; and

WHEREAS, the City Council has further investigated and determined that nicotine is a known neurotoxin that is also one of the most highly addictive substances available for public consumption; and

WHEREAS, the City Council has investigated and determined that, the manufacturers and marketers of electronic cigarettes or e-cigarettes purposefully and

Attachment: 2014-048 ATTH 03 City of Frisco Ordinance (1087 : Ord No. 2014-048 Prohibit E-Cigarette Sales to Minors)

intentionally advertise their products as safe nicotine delivery devices and smoking cessation modalities; and

WHEREAS, the City Council has further investigated and determined that laboratory tests conducted by the U.S. Food and Drug Administration ("FDA") have shown that electronic cigarettes or e-cigarette vapors contain carcinogens, including nitrosamines. Further, the FDA tests showed that electronic cigarettes or e-cigarettes vapors were found to contain toxic chemicals such as, diethylene glycol, a common ingredient in antifreeze and which ingredient, in 2007, was surreptitiously substituted for glycerin by several Chinese manufacturing companies in the making of toothpaste which resulted in the deaths of hundreds of people worldwide. While some manufacturers of electronic cigarettes or e-cigarettes dispute the FDA's findings as limited in scope and sample, these manufacturers have not submitted, for independent peer review, any of their findings that purportedly support their safety and smoking cessation claims; and

WHEREAS, the City Council has further investigated and determined that concurrent with this lack of suitable information, manufacturers of electronic cigarettes or e-cigarettes offer their liquid nicotine cartridges in a variety of flavors, including, but not limited to, cherry, chocolate and vanilla, which flavorings the FDA and public health advocates warn are purposefully meant to appeal to and attract young people and are commonly referred to as "training wheels" for traditional cigarettes; and

WHEREAS, the City Council has further investigated and determined that studies show that adolescents can become addicted to nicotine after ingesting the equivalent of twenty (20) traditional cigarettes, the amount traditionally available in a single pack, and the appeal created by the flavored electronic cigarettes, e-cigarettes and/or liquid nicotine can lead young people into a lifetime of nicotine addiction; and

WHEREAS, the City Council has further investigated and determined that the nicotine content provided by electronic cigarettes or e-cigarettes is unknown and unspecified and presents a significant risk of rapid addiction or overdose; and

WHEREAS, the City Council has further investigated and determined that other governments and public health organizations, including the World Health Organization and the Canadian government's FDA equivalent, the Heath Products and Food Branch Inspectorate, have joined the FDA in speaking out about the potential dangers posed by electronic cigarettes or e-cigarettes and are also calling on manufactures of electronic cigarettes or e-cigarettes to discontinue their safety claims until these products have been independently tested; and

WHEREAS, the City Council has further investigated and determined that every year tobacco products siphon off more than $268 billion in directly related healthcare and lost worker productivity costs and lead to the deaths of almost half a million Americans, and the City Council is supportive of tobacco cessation programs and modalities that have proven efficacy and utilize safe FDA-approved products; and

WHEREAS, the City Council has further investigated and determined that protecting the citizens of the City against an untested nicotine product like electronic

Attachment: 2014-048 ATTH 03 City of Frisco Ordinance (1087 : Ord No. 2014-048 Prohibit E-Cigarette Sales to Minors)

cigarettes, e-cigarettes and liquid nicotine represents sound public health and fiscal policy; and

WHEREAS, the City Council has further investigated and determined that a ban on the sale of electronic cigarettes, e-cigarettes, liquid nicotine and like products in the City to persons under the age of eighteen (18) and a prohibition on self-service merchandising in the retail sale of electronic cigarettes, e-cigarettes, liquid nicotine and like products in order to minimize their physical accessibility to minors serves an important public interest in furtherance of the health, safety and general welfare of the citizens of the City; and

WHEREAS, the City Council has further investigated and determined that the Texas Legislature currently prohibits the possession, purchase, consumption or receipt of cigarettes or tobacco products by minors, and the City enforces such regulations; and

WHEREAS, the City Council has further investigated and determined that the Texas Legislature currently regulates vendor assisted sales and vending machines of cigarettes or tobacco products, including, but not limited to, prohibiting the use of the same by minors; and

WHEREAS, the City Council has further investigated and determined that all legal notices required for amending the Code of Ordinances have been given in the manner and form set forth by law, and public hearings have been held on the proposed textual amendments and all other requirements of notice and completion of such procedures have been fulfilled; and

WHEREAS, the City Council has further investigated and determined that in order to promote the public health, safety and welfare of the City and its citizens, it is in the best interest of the City and its citizens to amend the Code of Ordinances as set forth below.

NOW, THEREFORE, BE IT ORDAINED BY THE CITY COUNCIL OF THE CITY OF FRISCO, TEXAS:

SECTION 1: Findings Incorporated. The findings set forth above are incorporated into the body of this Ordinance as if fully set forth herein.

SECTION 2: Amendment to the Code of Ordinances, Chapter 54 (Offenses and Miscellaneous Provisions), Article II (Regulation of Smoking), Division 1 (Smoking), Section 54-19 (Definitions). The Code of Ordinances, Chapter 54 (Offenses and Miscellaneous Provisions), Article II (Regulation of Smoking), Division 1 (Smoking), Section 54-19 (Definitions) is hereby amended as follows:

"**ARTICLE II. REGULATION OF SMOKING**
DIVISION 1. SMOKING

Sec. 54-19 Definitions

Attachment: 2014-048 ATTH 03 City of Frisco Ordinance (1087 : Ord No. 2014-048 Prohibit E-Cigarette Sales to Minors)

. . .

Cigar as used herein shall mean, unless otherwise amended by the TEX. TAX CODE, Chapter 155, a roll of fermented tobacco that is wrapped in tobacco and the main stream of smoke from which produces an alkaline reaction to litmus paper.

Cigarette as used herein shall mean, unless otherwise amended by the TEX. TAX CODE, Chapter 154, a roll for smoking: (A) that is made of tobacco or tobacco mixed with another ingredient and wrapped or covered with a material other than tobacco; and (B) that is not a cigar.

. . .

Electronic cigarette and/or e-cigarette as used herein shall mean any electronic device composed of a mouthpiece, heating element, battery and electronic circuits that provides, or is manufactured or intended to provide, a vapor of liquid nicotine and/or other substances mixed with propylene glycol and/or other substances delivered or deliverable to the user that he/she can inhale in simulation of smoking. This term shall include every version and type of such devices whether they are manufactured or marketed as electronic cigarettes, e-cigarettes, electronic cigars, e-cigars, electronic pipes, e-pipes or under any other product name or description.

. . .

Liquid nicotine as used herein shall mean any liquid product composed either in whole or in part of pure nicotine and propylene glycol and/or any other substance and manufactured for use with electronic cigarettes or e-cigarettes.

Minor as used herein means a person younger than eighteen (18) years of age.

. . .

Open display unit as used herein shall mean, in the context of the retail sale of electronic cigarettes or e-cigarettes and/or liquid nicotine, any device, furniture or furnishing within or upon which electronic cigarettes or e-cigarettes and/or liquid nicotine are displayed to customers, and includes, but is not limited to, any case, rack, shelf, counter, table, desk, kiosk, booth, stand, vending machine and other surface.

. . .

Place of business as used herein shall mean: (A) a commercial business location where cigarettes, tobacco products, electronic cigarettes or e-cigarettes and/or liquid nicotine is/are sold; (B) a commercial business

Attachment: 2014-048 ATTH 03 City of Frisco Ordinance (1087 : Ord No. 2014-048 Prohibit E-Cigarette Sales to Minors)

location where cigarettes, tobacco products, electronic cigarettes or e-cigarettes and/or liquid nicotine are kept for sale of consumption or otherwise stored; or (C) a vehicle from which cigarettes, tobacco products, electronic cigarettes or e-cigarettes and/or liquid nicotine is/are sold.

. . .

Possess(es), possessing or possession as used herein shall mean actual care, custody, control or management.

. . .

Retailer as used herein shall mean a person, place of business or retail and service establishment, who/which engages in the practice of selling cigarettes, tobacco products, electronic cigarettes or e-cigarettes and/or liquid nicotine to consumers and includes, without limitation, the owner of an open display unit.

. . .

Smoke(s) or smoking as used herein shall mean and includes the carrying, possessing or holding of a pipe, cigarette, tobacco product, electronic cigarette or e-cigarette or liquid nicotine of any kind which is burning or emitting a vapor.

. . .

Self-service merchandising as used herein shall mean, in the context of the retail sale of electronic cigarettes or e-cigarettes and/or liquid nicotine, the open display, including, without limitation, the use of an open display unit of electronic cigarettes or e-cigarettes and/or liquid nicotine, whether packaged or otherwise, for direct retail customer access and handling prior to purchase without the intervention of assistance of the retailer or the retailer's owner, employee or agent.

. . .

Tobacco product as used herein shall mean: (A) cigar; (B) smoking tobacco, including granulated, plug-cut, crimp-cut, ready-rubbed, and any form of tobacco suitable for smoking in a pipe or as a cigarette; (C) chewing tobacco, including Cavendish, Twist, plug scrap and any kind of tobacco suitable for chewing; (D) snuff or other preparations of pulverized tobacco; or (E) an article or product that is made of tobacco or a tobacco substitute and that is not a cigarette.

. . . ."

Attachment: 2014-048 ATTH 03 City of Frisco Ordinance (1087 : Ord No. 2014-048 Prohibit E-Cigarette Sales to Minors)

SECTION 3: Amendment to the Code of Ordinances, Chapter 54 (Offenses and Miscellaneous Provisions), Article II (Regulation of Smoking). The Code of Ordinances, Chapter 54 (Offenses and Miscellaneous Provisions), Article II (Regulation of Smoking) is hereby amended to add Division 3 (Electronic Cigarettes and/or E-Cigarettes and Liquid Nicotine):

"ARTICLE II. REGULATION OF SMOKING
DIVISION 3. ELECTRONIC CIGARETTES
AND/OR E-CIGARETTES AND LIQUID NICOTINE

Sec. 54-56 Purpose and Intent.

This Ordinance is adopted so that the City Council may promote, protect and improve the health, safety and general welfare of the citizens of the City by discouraging the unhealthy practice of using electronic cigarettes or e-cigarettes and liquid nicotine and to help prevent the addiction to nicotine, especially by minors, through regulation of the sale and merchandising of certain electronic cigarettes or e-cigarettes and liquid nicotine products, the regulation of which is not preempted to the federal or state government.

Sec. 54-57 Possession, Purchase, Consumption or Receipt of Electronic Cigarettes or E-Cigarettes and/or Liquid Nicotine by Minors Prohibited.

(a) A person who is younger than 18 years of age commits an offense if the individual:

(1) Possesses, purchases, consumes or accepts an electronic cigarette, e-cigarette or liquid nicotine; or

(2) Falsely represents himself or herself to be 18 years of age or older by displaying proof of age that is false, fraudulent or not actually proof of the individual's own age in order to obtain possession of, purchase or receive an electronic cigarette, e-cigarette or liquid nicotine.

(b) It shall be a defense to prosecution for a violation of this section if the individual younger than 18 years of age possessed the electronic cigarette, e-cigarette or liquid nicotine in the presence of:

(1) An adult parent, a guardian or a spouse of the individual; or

(2) An employer of the individual, if possession or receipt of the electronic cigarette, e-cigarette or liquid nicotine is required in the performance of the employee's duties as an employee.

Attachment: 2014-048 ATTH 03 City of Frisco Ordinance (1087 : Ord No. 2014-048 Prohibit E-Cigarette Sales to Minors)

(c) It shall also be a defense to prosecution for a violation of this section that the individual younger than 18 years of age is participating in an inspection or test of compliance in accordance with Section 161.088, Health and Safety Code.

Sec. 54-58 Sale of Electronic Cigarette or E-Cigarette or Liquid Nicotine to Persons Younger Than 18 years of Age Prohibited; Proof of Age Required.

(a) A person or retailer commits an offense if the person or retailer with criminal negligence:

(1) Sells, gives or causes to be sold or given an electronic cigarette or e-cigarette or liquid nicotine to someone who is younger than 18 years of age; or

(2) Sells, gives or causes to be sold or given an electronic cigarette or e-cigarette or liquid nicotine to another person who intends to deliver it to someone who is younger than 18 years of age.

(b) If an offense under this section occurs in connection with a sale by an employee of the owner of a store in which electronic cigarettes, e-cigarettes and/or liquid nicotine is/are sold at retail, the employee is criminally responsible for the offense and is subject to prosecution.

(c) It is a defense to prosecution under subsection (a)(1) that the person to whom the electronic cigarette, e-cigarette or liquid nicotine was sold or given presented to the defendant apparently valid proof of identification.

(d) A proof of identification satisfies the requirements of subsection (c) if it contains a physical description and photograph consistent with the person's appearance, purports to establish that the person is 18 years of age or older and was issued by a governmental agency. The proof of identification may include a driver's license issued by this state or another state, a passport or an identification card issued by a state or the federal government.

Sec. 54-59 Vendor Assisted Sales Required; Self-Service Merchandising Prohibited.

(a) Except as provided by Subsection (b), a retailer or other person may not:

(1) Offer electronic cigarettes, e-cigarettes or liquid nicotine for sale in a manner that permits a customer direct access to the electronic cigarettes, e-cigarettes or liquid nicotine;

Attachment: 2014-048 ATTH 03 City of Frisco Ordinance (1087 : Ord No. 2014-048 Prohibit E-Cigarette Sales to Minors)

(2) Offer for sale or display for sale electronic cigarettes, e-cigarettes or liquid nicotine by means of self-service merchandising; or

(3) Install or maintain an open display unit containing electronic cigarettes, e-cigarettes or liquid nicotine.

(b) It is a defense to prosecution under subsection (a) if:

(1) A facility or business is not open to persons younger than 18 years of age at any time;

(2) A facility or business is a premises for which a person holds a package store permit issued under the Alcoholic Beverage Code; or

(3) An open display unit is located in an area that is inaccessible to customers.

Sec. 54-60 Enforcement.

This Chapter 54, Article II, Division 3 shall be enforced by the city's police department."

SECTION 4: Penalty Provision. Any person, firm, corporation, retailer or business entity violating this Ordinance shall be deemed guilty of a misdemeanor, and upon conviction thereof shall be subject to a fine not to exceed the sum of FIVE HUNDRED DOLLARS ($500.00), unless the violation relates to the Code of Ordinances, Chapter 54, Article II, Division 3, Section 54-57, in which case, the fine shall not exceed the sum of TWO HUNDRED FIFTY AND NO/100 DOLLARS ($250.00). Each continuing day's violation under this Ordinance shall constitute a separate offense. The penal provisions imposed under this Ordinance shall not preclude the City from filing suit to enjoin the violation. The City retains all legal rights and remedies available to it pursuant to local, state and federal law.

SECTION 5: Savings/Repealing Clause. The Code of Ordinances shall remain in full force and effect, save and except as amended by this or any other ordinance. All provisions of any ordinance in conflict with this Ordinance are hereby repealed; but such repeal shall not abate any pending prosecution for violation of the repealed Ordinance, nor shall the repeal prevent prosecution from being commenced for any violation if occurring prior to the repeal of the Ordinance. Any remaining portions of conflicting ordinances shall remain in full force and effect.

SECTION 6: Severability. Should any section, subsection, sentence, clause or phrase of this Ordinance be declared unconstitutional or invalid by a court of competent jurisdiction, it is expressly provided that any and all remaining portions of this Ordinance shall remain in full force and effect. The City hereby declares that it would have passed

Attachment: 2014-048 ATTH 03 City of Frisco Ordinance (1087 : Ord No. 2014-048 Prohibit E-Cigarette Sales to Minors)

this Ordinance, and each section, subsection, clause and/or phrase hereof irrespective of the fact that any one or more sections, subsections, sentences, clauses and/or phrases be declared unconstitutional or invalid.

SECTION 7: Effective Date. This Ordinance shall become effective from and after its passage and publication as required by the City Charter and by law.

DULY PASSED AND APPROVED BY THE CITY COUNCIL OF THE CITY OF FRISCO, TEXAS, on this _____ day of January, 2014.

_____
Maher Maso, Mayor

ATTESTED AND CORRECTLY RECORDED:

_____
Jenny Page, City Secretary

APPROVED AS TO FORM:

_____
Abernathy, Roeder, Boyd & Joplin, P.C.
Rebecca Hendricks Brewer, City Attorneys

DATES OF PUBLICATION: _____, FRISCO ENTERPRISE

Attachment: 2014-048 ATTH 03 City of Frisco Ordinance (1087 : Ord No. 2014-048 Prohibit E-Cigarette Sales to Minors)

ORDINANCE NO. _____

AN ORDINANCE OF THE CITY COUNCIL OF THE CITY OF LEWISVILLE, TEXAS, AMENDING CHAPTER 8, MISCELLANEOUS OFFENSES, OF THE LEWISVILLE CITY CODE BY PROHIBITING THE SALE TO A MINOR OF ELECTRONIC CIGARETTES AND/OR LIQUID NICOTINE AND PROHIBITING SELF-SERVICE MERCHANDISING; PROVIDING DEFENSES; PROVIDING A REPEALER; PROVIDING FOR SEVERABILITY; PROVIDING A PENALTY; PROVIDING AN EFFECTIVE DATE; AND DECLARING AN EMERGENCY.

WHEREAS, electronic cigarettes ("e-cigarettes") are devices that deliver, among other things, nicotine through vapor that is inhaled by the user;

WHEREAS, in the Tobacco Control Act, Congress recognized that nicotine is an addictive drug;

WHEREAS, the U.S. Food and Drug Administration ("FDA") acknowledges that the safety and efficacy of e-cigarettes have not been fully studied; therefore, consumers have no way of knowing, among other things, whether e-cigarettes are safe for their intended use or how much nicotine or other potentially harmful chemicals are being inhaled during use;

WHEREAS, the FDA has also noted that e-cigarettes are marketed and sold to young people and are available in different flavors, such as chocolate and mint, which may appeal to young people;

WHEREAS, e-cigarettes are not yet regulated by state or federal law;

WHEREAS, the FDA is considering appropriate regulation of e-cigarettes, but it is essential for the City to impose some type of reasonable restriction on these products until a federal regulatory system may be properly implemented; and,

Attachment: 2014-048 ATTH 04 City of Lewisville E-cig Ordinance (1087 : Ord No. 2014-048 Prohibit E-Cigarette Sales to Minors)

Attachment: 2014-048 ATTH 04 City of Lewisville E-cig Ordinance (1087 : Ord No. 2014-048 Prohibit E-Cigarette Sales to Minors)

WHEREAS, it has been determined that the regulation of e-cigarettes and liquid nicotine is in the best interests of the City of Lewisville and will promote the health, safety and welfare of the citizens of the City of Lewisville and the general public.

NOW, THEREFORE, BE IT ORDAINED BY THE CITY COUNCIL OF THE CITY OF LEWISVILLE, TEXAS, THAT:

SECTION 1. Chapter 8 of the Lewisville City Code is hereby amended by adding the following new section:

Sec. 8-5. E-Cigarette Regulations.

(a) *Purpose*. The purpose of this section is to prohibit the sale to minors, of e-cigarettes and liquid nicotine, both hereinafter defined, within the city limits of the City of Lewisville.

(b) *Definitions*. The following words and phrases, when used in this section, shall have the meanings ascribed to them in this section, except where the context clearly indicates a different meaning:

"*Electronic Cigarette*" or "*E-Cigarette*" shall mean any device that uses an atomizer or similar device that allows users to inhale a vapor of liquid nicotine or other vapor without the use of fire, smoke, ash or carbon monoxide. The definition of e-cigarette includes any of its component parts. The term includes such devices regardless of the details of the product appearance or marketed name.

"Liquid Nicotine" shall mean any liquid product composed either in whole or in part of nicotine, propylene glycol and/or any other substance and manufactured for use with e-cigarettes.

"*Minor*" shall mean any individual younger than eighteen (18) years of age.

"Person" shall mean an individual, corporation, partnership, wholesaler, retailer or any licensed or unlicensed business.

"Proof of Identification" shall mean identification that contains a physical description and photograph consistent with the person's appearance, purports to establish that the person is 18 years of age or older and was issued by a governmental agency. The proof of identification may include a driver's

license issued by this state or another state, a passport or an identification card issued by a state or federal government.

(c) *Sale, distribution, or offering for sale to minor.*

(1) *Offense*. It shall be unlawful for any person to give, sell, or offer for sale an e-cigarette, liquid nicotine or sample to a minor within the territorial limits of the City of Lewisville.

(2) *Defenses*. It shall be a defense to the above offense if:
- (i) the minor is in the presence of a parent, guardian, spouse or other adult to whom the minor had been committed by a court; or
- (ii) the minor presents an apparently valid proof of identification.

(d) *Vendor-Assisted Sales Required. Self-Service Merchandising Prohibited.*

(1) *Offense*. A retailer or other person may not:
- (i) offer e-cigarettes or liquid nicotine for sale in a manner that permits a customer direct access to the e-cigarettes or liquid nicotine;
- (ii) offer for sale or display for sale e-cigarettes or liquid nicotine by means of self-service merchandising; or
- (iii) install or maintain an open display unit containing e-cigarettes or liquid nicotine.

(2) *Defenses*. It shall be a defense to the above offense if:
- (i) the facility or business is not open to persons younger than 18 years of age at any time; or
- (ii) the open display unit is located in an area that is inaccessible to customers.

SECTION 2. REPEALER. Every ordinance or parts of ordinances found to be in conflict herewith are hereby repealed. Nothing contained herein shall be construed to conflict with state and/or federal law governing the same.

SECTION 3. SEVERABILITY. If any section, sentence, clause, or phrase of this ordinance shall for any reason be held to be invalid, such decision shall not affect the validity of the remaining sections, sentences, clauses, or phrases of this ordinance, but they shall remain in effect.

Attachment: 2014-048 ATTH 04 City of Lewisville E-cig Ordinance (1087 : Ord No. 2014-048 Prohibit E-Cigarette Sales to Minors)

SECTION 4. PENALTY. Any person, firm or corporation who violates any provisions of this ordinance shall be deemed guilty of a misdemeanor and, upon conviction thereof in the municipal court, shall be subject to a fine of not more than $500.00 for each offense, and each and every day such offense is continued shall constitute a new and separate offense.

SECTION 5. EFFECTIVE DATE. This Ordinance shall take effect and be in full force and effect from and after the date of its passage and publication as required by law.

SECTION 6. EMERGENCY. It being for the public welfare that this ordinance be passed creates an emergency and public necessity and the rule requiring this ordinance be read on three separate occasions be, and the same is hereby, waived and this ordinance shall be in full force and effect from and after its passage and approval and publication, as the law in such cases provides.

DULY PASSED AND APPROVED BY THE CITY COUNCIL OF THE CITY OF LEWISVILLE, TEXAS, BY A VOTE OF _____ TO _____, ON THIS THE 27th DAY OF JANUARY, 2014.

APPROVED:

_____
Dean Ueckert, MAYOR

ATTEST:

_____
Julie Heinze, CITY SECRETARY

APPROVED AS TO FORM:

_____
Lizbeth Plaster, CITY ATTORNEY

Attachment: 2014-048 ATTH 04 City of Lewisville E-cig Ordinance (1087 : Ord No. 2014-048 Prohibit E-Cigarette Sales to Minors)

National Association of Attorneys General

PRESIDENT
J.B. Van Hollen
Wisconsin Attorney General

PRESIDENT-ELECT
Jim Hood
Mississippi Attorney General

VICE PRESIDENT
Marty Jackley
South Dakota Attorney General

IMMEDIATE PAST PRESIDENT
Douglas Gansler
Maryland Attorney General

EXECUTIVE DIRECTOR
James McPherson

September 24, 2013

The Honorable Margaret Hamburg, Commissioner
U.S. Food and Drug Administration
10903 New Hampshire Avenue
Silver Spring, MD 20993

Re: FDA Regulation of E-Cigarettes

Dear Commissioner Hamburg,

The undersigned Attorneys General write to urge the Food and Drug Administration (FDA) to take all available measures to meet the FDA's stated deadline of October 31, 2013, to issue proposed regulations that will address the advertising, ingredients, and sale to minors of electronic cigarettes (also known as e-cigarettes).

State Attorneys General have long fought to protect their States' citizens, particularly youth, from the dangers of tobacco products. For example, every State Attorney General sued the major cigarette companies for the harm their products caused. With the protection of our States' citizens again in mind, the undersigned Attorneys General write to highlight the need for immediate regulatory oversight of e-cigarettes, an increasingly widespread, addictive product.

As you know, e-cigarettes are battery-operated products designed to deliver nicotine to the user by heating liquid nicotine, derived from tobacco plants, along with flavors and other chemicals, into a vapor that the user inhales. The nicotine found in e-cigarettes is highly addictive, has immediate bio-chemical effects on the brain and body at any dosage, and is toxic in high doses.[1]

E-Cigarette Sales are Growing Exponentially Using Marketing that Includes Television

Sales of e-cigarettes have grown rapidly in the United States, and after doubling every year since 2008, sales in 2013 are now accelerating even faster and projected to reach $1.7 billion.[2] The cost of e-cigarettes has fallen

[1] U.S. Surgeon General, U.S. Department of Health and Human Services, *The Health Consequences of Smoking: Nicotine Addiction* (1988); Emergency Response Safety and Health Database, National Institute for Occupational Safety and Health, Centers for Disease Control and Prevention, http://www.cdc.gov/niosh/ershdb/EmergencyResponseCard_29750028.html

[2] Compare Josh Sanburn, *Can Electronic Cigarettes Challenge Big Tobacco?*, Time.com, Jan. 8, 2013, available at http://business.time.com/2013/01/08/can-electronic-cigarettes-challenge-big-tobacco/, (estimating 2013 sales at $1 billion), with Stuart Elliot, *E-Cigarette Makers' Ads Echo Tobacco's Heyday*, New York Times, Aug. 29, 2013, available at http://www.nytimes.com/2013/08/30/business/media/e-cigarette-makers-ads-echo-tobaccos-heyday.html, (estimating 2013 sales at $1.7 billion).

Attachment: 2014-048 ATTH 04 City of Lewisville E-cig Ordinance (1087 : Ord No. 2014-048 Prohibit E-Cigarette Sales to Minors)

dramatically, as well, making them more affordable, and thus more attractive to young people. Unlike traditional tobacco products, there are no federal age restrictions that would prevent children from obtaining e-cigarettes, nor are there any advertising restrictions.

Along with the growth of e-cigarette sales, there has also been a growth of e-cigarette advertising over the past year. For example, in this year's Super Bowl broadcast, NJOY e-cigarettes purchased a 30-second television advertisement slot which reached at least 10 million viewers in certain markets and reportedly translated into a dramatic 30-40% increase in sales.[3] The advertisement depicted an attractive man smoking an e-cigarette that looked just like a real cigarette. Since then, advertisements for e-cigarettes have regularly appeared on primetime television, making it easier for those advertisements to reach children. Moreover, e-cigarettes are not being marketed as smoking cessation devices, but rather as recreational alternatives to real cigarettes. Consumers are led to believe that e-cigarettes are a safe alternative to cigarettes, despite the fact that they are addictive, and there is no regulatory oversight ensuring the safety of the ingredients in e-cigarettes.

E-Cigarettes Appeal to Youth

E-cigarettes contain fruit and candy flavors -- such as cherry, chocolate, gummy bear, and bubble gum -- that are appealing to youth. The FDA has banned such flavors from cigarettes and should take the same action regarding e-cigarettes. E-cigarettes and refills of the liquid nicotine solution used with e-cigarettes can easily be ordered online without age verification. By intentional use or mistaken ingestion from the non-child resistant containers, e-cigarettes and liquid nicotine refills can deliver dangerously high doses of liquid nicotine to youth.

In addition to flavors, e-cigarette manufacturers, such as eJuiceMonkeys.com and Magic Puff City E-cigarettes, use cartoon monkeys to sell e-cigarettes,[4] even though for many years, the major manufacturers of traditional cigarettes have been banned from using cartoons to advertise. Finally, e-cigarette manufacturers, such as White Cloud Cigarettes, offer reusable e-cigarette "skins" -- known as Vapor Jackets -- that are intended to make the e-cigarette desirable or fashionable and are available in a variety of patterns that appeal to children, one of which uses images from the popular video game, Angry Birds.[5]

Further, data from the 2011 and 2012 National Youth Tobacco Surveys (conducted by the Centers for Disease Control and Prevention) show that e-cigarette use among students doubled in the last year. Specifically, one in 10 high school students reported that they had tried an e-cigarette in the last year -- up from one in 20 in 2011, and 1.8 million middle and high school students said they had tried e-cigarettes in 2012.[6] The increased usage among young people

---

[3] Benjamin Wallace, *Smoke Without Fire*, New York Magazine, April 28, 2013, available at http://nymag.com/news/features/e-cigarettes-2013-5/.

[4] See http://ejuicemonkeys.com/ and http://cityecigarettes.com/

[5] See http://www.whitecloudelectroniccigarettes.com/accessories/vapor-jackets/

[6] Catherine Corey, *Notes from the Field: Electronic Cigarette Use Among Middle and High School Students – United States, 2011-2012*, Centers for Disease Control and Prevention Morbidity and Mortality Weekly Report, September 6, 2013, available at http://www.cdc.gov/mmwr/preview/mmwrhtml/mm6235a6.htm?s_cid=mm6235a6_w

Attachment: 2014-048 ATTH 04 City of Lewisville E-cig Ordinance (1087 : Ord No. 2014-048 Prohibit E-Cigarette Sales to Minors)

echoes the growth among adult users, and researchers indicated that aggressive marketing campaigns, in part, drove the increase.[7]

The FDA has Authority to Regulate E-cigarettes and Protect the Public

In the Tobacco Control Act, Congress recognized that nicotine is an addictive drug, and virtually all new users of tobacco products are under the age of eighteen and are therefore too young to legally purchase such products. Congress further found that tobacco advertising and marketing contributes significantly to the teenage use of nicotine-containing tobacco products. To help prevent children from using tobacco products, the Tobacco Control Act imposed restrictions on advertising and marketing to youth. These restrictions should be applied to e-cigarettes, as well, to safeguard children from nicotine addiction and other potential health effects of e-cigarettes.

The FDA has authority to regulate electronic cigarettes as "tobacco products" under the Tobacco Control Act, as they are products "made or derived from tobacco" that are not a "drug," "device," or combination product. Case law, such as *Sottera, Inc. v. Food & Drug Administration*, 627 F.3d 891 (D.C. Cir. 2010), further supports the contention that e-cigarettes are "made or derived from tobacco" and can be regulated as "tobacco products" under the Tobacco Control Act.

We ask the FDA to move quickly to ensure that all tobacco products are tested and regulated to ensure that companies do not continue to sell or advertise to our nation's youth.

Very respectfully yours,

Martha Coakley
Massachusetts Attorney General

Mike DeWine
Ohio Attorney General

Michael Geraghty
Alaska Attorney General

Tom Horne
Arizona Attorney General

Dustin McDaniel
Arkansas Attorney General

Kamala Harris
California Attorney General

[7] Sabrina Tavernise, *Rise Is Seen in Students Who Use E-Cigarettes*, New York Times, September 5, 2013, available at http://www.nytimes.com/2013/09/06/health/e-cigarette-use-doubles-among-students-survey-shows.html

Attachment: 2014-048 ATTH 04 City of Lewisville E-cig Ordinance (1087 : Ord No. 2014-048 Prohibit E-Cigarette Sales to Minors)

John Suthers
Colorado Attorney General

Joseph R. "Beau" Biden III
Delaware Attorney General

David Louie
Hawaii Attorney General

Lisa Madigan
Illinois Attorney General

Tom Miller
Iowa Attorney General

James "Buddy" Caldwell
Louisiana Attorney General

Douglas F. Gansler
Maryland Attorney General

Lori Swanson
Minnesota Attorney General

Chris Koster
Missouri Attorney General

George Jepsen
Connecticut Attorney General

Lenny Rapadas
Guam Attorney General

Lawrence Wasden
Idaho Attorney General

Greg Zoeller
Indiana Attorney General

Jack Conway
Kentucky Attorney General

Janet Mills
Maine Attorney General

Bill Schuette
Michigan Attorney General

Jim Hood
Mississippi Attorney General

Tim Fox
Montana Attorney General

Attachment: 2014-048 ATTH 04 City of Lewisville E-cig Ordinance (1087 : Ord No. 2014-048 Prohibit E-Cigarette Sales to Minors)

Catherine Cortez Masto
Nevada Attorney General

Gary King
New Mexico Attorney General

Roy Cooper
North Carolina Attorney General

Kathleen Kane
Pennsylvania Attorney General

Peter Kilmartin
Rhode Island Attorney General

Robert E. Cooper, Jr.
Tennessee Attorney General

William H. Sorrell
Vermont Attorney General

Robert W. Ferguson
Washington Attorney General

Joseph Foster
New Hampshire Attorney General

Eric T. Schneiderman
New York Attorney General

Ellen Rosenblum
Oregon Attorney General

Luis Sánchez Betances
Puerto Rico Attorney General

Marty J. Jackley
South Dakota Attorney General

John E. Swallow
Utah Attorney General

Vincent Frazer
Virgin Islands Attorney General

Peter K. Michael
Wyoming Attorney General

Attachment: 2014-048 ATTH 04 City of Lewisville E-cig Ordinance (1087 : Ord No. 2014-048 Prohibit E-Cigarette Sales to Minors)

Attachment: 2014-048 ATTH 04 City of Lewisville E-cig Ordinance (1087 : Ord No. 2014-048 Prohibit E-Cigarette Sales to Minors)

Archived Content

The content on this page is provided for reference purposes only. It was current when produced, but is no longer maintained and may be outdated.

Search Archive

Home News & Events Newsroom Press Announcements

News & Events

FDA NEWS RELEASE

For Immediate Release: July 22, 2009

Media Inquiries: Siobhan DeLancey, 301-796-4668, siobhan.delancey@fda.hhs.gov
Consumer Inquiries: 888-INFO-FDA

FDA and Public Health Experts Warn About Electronic Cigarettes

The U.S. Food and Drug Administration today announced that a laboratory analysis of electronic cigarette samples has found that they contain carcinogens and toxic chemicals such as diethylene glycol, an ingredient used in antifreeze.

Electronic cigarettes, also called "e-cigarettes," are battery-operated devices that generally contain cartridges filled with nicotine, flavor and other chemicals. The electronic cigarette turns nicotine, which is highly addictive, and other chemicals into a vapor that is inhaled by the user.

These products are marketed and sold to young people and are readily available online and in shopping malls. In addition, these products do not contain any health warnings comparable to FDA-approved nicotin replacement products or conventional cigarettes. They are also available in different flavors, such as chocolate and mint, which may appeal to young people.

Public health experts expressed concern that electronic cigarettes could increase nicotine addiction and tobacco use in young people. Jonathan Winickoff, M.D., chair of the American Academy of Pediatrics Tobacco Consortium and Jonathan Samet, M.D., director of the Institute for Global Health at the Universit of Southern California, joined Joshua Sharfstein, M.D., principal deputy commissioner of the FDA, and Matthew McKenna, M.D., director of the Office of Smoking and Health for the Centers for Disease Control and Prevention, to discuss the potential risks associated with the use of electronic cigarettes.

"The FDA is concerned about the safety of these products and how they are marketed to the public," saic Margaret A. Hamburg, M.D., commissioner of food and drugs.

Because these products have not been submitted to the FDA for evaluation or approval, at this time the agency has no way of knowing, except for the limited testing it has performed, the levels of nicotine or th amounts or kinds of other chemicals that the various brands of these products deliver to the user.

The FDA's Division of Pharmaceutical Analysis analyzed the ingredients in a small sample of cartridges from two leading brands of electronic cigarettes. In one sample, the FDA's analyses detected diethylene glycol, chemical used in antifreeze that is toxic to humans, and in several other samples, the FDA analyses detected carcinogens, including nitrosamines. These tests indicate that these products contained detectable levels of known carcinogens and toxic chemicals to which users could potentially be exposed.

The FDA has been examining and detaining shipments of e-cigarettes at the border and the products it ha examined thus far meet the definition of a combination drug-device product under the Federal Food, Drug, and Cosmetic Act. The FDA has been challenged regarding its jurisdiction over certain e-cigarettes in a case currently pending in federal district court. The agency is also planning additional activities to address its concerns about these products.

Health care professionals and consumers may report serious adverse events (side effects) or product quality problems with the use of e-cigarettes to the FDA's MedWatch Adverse Event Reporting program either online, by regular mail, fax or phone.

- Online: http://www.fda.gov/Safety/MedWatch/default.htm[1]

- Regular Mail: use postage-paid FDA form 3500 available at: http://www.fda.gov/Safety/MedWatch/HowToReport/DownloadForms/default.htm[2] and mail to MedWatch, 5600 Fishers Lane, Rockville, MD 20852-9787
- Fax: (800) FDA-0178
- Phone: (800) FDA-1088

#

For More Information
Electronic Cigarettes

3

RSS Feed for FDA News Releases[4] [what is RSS?[5]]

Page Last Updated: 04/17/2013
Note: If you need help accessing information in different file formats, see Instructions for Downloading Viewers and Players.

Accessibility Contact FDA Careers FDA Basics FOIA No Fear Act Site Map Transparency Website Policies

U.S. Food and Drug Administration
10903 New Hampshire Avenue
Silver Spring, MD 20993
Ph. 1-888-INFO-FDA (1-888-463-6332)
Email FDA

For Government For Press

Combination Products Advisory Committees Science & Research Regulatory Information Safety Emergency Preparedness International Programs News & Events Training and Continuing Education Inspections/Compliance State & Local Officials Consumers Industry Health Professionals FDA Archive

U.S. Department of Health & Human Services

Links on this page:

1. http://www.fda.gov/Safety/MedWatch/default.htm
2. http://www.fda.gov/Safety/MedWatch/HowToReport/DownloadForms/default.htm
3. http://www.fda.gov/NewsEvents/PublicHealthFocus/ucm172906.htm
4. http://www.fda.gov/AboutFDA/ContactFDA/StayInformed/RSSFeeds/PressReleases/rss.xml
5. http://www.fda.gov/AboutFDA/ContactFDA/StayInformed/RSSFeeds/ucm144575.htm

Attachment: 2014-048 ATTH 04 City of Lewisville E-cig Ordinance (1087 : Ord No. 2014-048 Prohibit E-Cigarette Sales to Minors)

17 DEC 13 *Dallas Morning News*

Richardson now requires a special permit for c-cigarette businesses.
Mansfield ordained a six-month moratorium on new e-cigarette shops until it can get more information.
In Murphy, officials have banned the possession and sale of e-cigarettes to minors.
Rockwall leaders considering a similar measure questioned whether it was enforceable or appropriate.

15 JAN 14 *The Leader*

Highland Village City Council is considering adopting an ordinance that would put regulations on the use of electronic cigarettes or e-cigarettes. Specifically, it would prohibit the sale of and the possession of e-cigarettes to minors younger than 18.

8 JAN 14 *Community ImPACT Newspaper*

Frisco City Council members opened discussion on the issue brought to them by the Frisco Police Department. Council consensus: Begin work to ban the selling of e-cigs to minors, but much more research into the potential harm of their usage on the public needs to be done before more decisions are made.

28 JAN 14 *5 NBCDFW.com*

Lewisville Bans Sale of Electronic Cigarettes to Minors. Smoking ordinance passes by a vote of 5-0, Violators face $500 fine. The legislation appears to only restrict the sale of the devices to minors and does not restrict usage or possession of the devices.

In Grand Prairie, the City Council approved an expansion of their current smoking ordinance..... They also made it illegal for those under 18 to purchase, possess or use an electronic cigarette.

30 JAN 14 *The Leader*

Flower Mound to consider e-cigarette restrictions. Deputy Mayor Pro Tem Bryan Webb said the Flower Mound Town council is expected to consider an ordinance at Monday's council meeting that would prohibit the sale of e-cigarettes, and the liquid nicotine that accompanies it, to people under the age of 18.

Lewisville adopted a similar ordinance Monday, and Highland Village approved the first reading of the same ordinance Tuesday. Highland Village's law would also prohibit the possession of e-cigarettes and its paraphernalia by minors.

City of Texarkana, Texas

Version: D

Briefing Sheet

Update Date: 5/22/2014 11:01 AM

Lead Department: City Manager **Action Officer:** John Whitson, City Manager

Subject: Resolution No. 2014-061 consenting to the sale of airport timber.

Briefing: 5/27/2014	**Public Hearing:**	**Second Briefing:**	**Council Vote:** 5/27/2014

Item Schedule

Updates/History of Briefing:

NOT APPLICABLE

Executive Summary and Background Information:

IAW City Code 3-13 (C) The Airport Director and the Airport Authority request the City Council to consent to the sale of 35 acres of airport timber. The proposed sale is in accordance with the Airport Timber Management Plan and was recommended at the 17 APR 14 meeting of the Airport Authority.

Potential Options:

- Grant Consent
-

Fiscal Implications:

Profits from the sale will be used by the Airport Authority

Staff Recommendation:

Approve the request for consent

Advisory Board/Committee Review:

NONE

Board/Committee Recommendation:

17 APR 14: Airport Authority adopted a resolution approving the sale of airport timber

Advisory Board/Committee Meeting Date and Minutes:

NOT APPLICABLE

Attachments

a. Goals and Perspectives (DOCX)
b. 2014-061 RES Consenting to the Sale of Airport Timber (PDF)
c. 2014-061 ATTH 01 Airport Timber Harvest Request and Contract (PDF)

Staff Coordination

City of Texarkana, Texas

City Manager	Jennifer Evans	Department Head Review	Skipped	05/12/2014 8:49 PM
Finance	Jennifer Evans	Review	Skipped	05/12/2014 8:49 PM
Public Works	Jennifer Evans	Review	Skipped	05/12/2014 8:49 PM
Public Information Officer		Jennifer Evans	PIO Review	Skipped 05/12/2014 8:49 PM
City Manager	Jennifer Evans	City Manager Review	Skipped	05/12/2014 8:49 PM
City Council	Jennifer Evans	Meeting	Completed	05/28/2014 1:27 PM

Meeting History

05/12/14 City Council MOVED FORWARD Next: 05/27/14

Stephen Luebbert, Texarkana Regional Airport Director, briefed this item.

City of Texarkana, Texas

Developing Perspectives and Goals Pending Approval by the City Council:

Perspectives		Goals
Serve the Community	☑	Promote an Environmentally Sensitive & Livable Community
	☑	Provide a Safe Community
	☐	Deliver Quality Services
	☐	Foster a Healthy Community
Run the Operations	☐	Enhance Community Preparedness & Responsiveness
	☑	Maximize Partnership Opportunities
	☐	Provide Courteous & Responsive Customer Service
	☐	Model a Positive City Image
	☐	Deliver Efficient Services
	☐	Cultivate Community Involvement & Access
Manage the Resources	☐	Maintain Fiscal Strength
	☐	Maximize Utilization & Resources
	☐	Invest in Infrastructure & Transportation
Develop Personnel	☐	Develop a Skilled & Diverse Workforce
	☐	Create a Positive & Rewarding Work Culture

Perspectives and Goals Additional Comments:

NONE

Resource Impact:

Staff time required if item is approved:	No Additional

Other Potential Impacts:

The estimated profit is expected to be approximately $15,000 which shall be used to leverage grant funds.

Public Information Plan:

☐	Newspaper Notice (Required by Statute)	☐	Public Hearing (Required by Statute)
☐	Public Forum/Input Session	☐	Press Release
☐	E-News Distribution	☐	Website Notice
☐	Social Media (Twitter, Facebook, etc.)	☐	Special Mailing
☐	Flyers Posted	☐	Banners Posted
☐	Survey	☐	Automated Phone Call
☑	None Required	☐	

Other:

Attachment: Goals and Perspectives (1106 : Resolution 2014-061 Consenting the Sale of Airport Timber)

RESOLUTION NO. 2014 - 061

A RESOLUTION OF THE CITY COUNCIL OF THE CITY OF TEXARKANA, TEXAS, CONSENTING TO THE SALE OF AIRPORT TIMBER; AND ESTABLISHING AN EFFECTIVE DATE.

WHEREAS, on April 17, 2014, the Texarkana Airport Authority recommended thinning and clear cutting certain sections of pine timber and hardwood on the airport property; and

WHEREAS, City Code Section 3.13(C) states that no property entrusted to the (Airport) Authority shall be sold, transferred or in any manner encumbered without written consent of the governing bodies of said cities; and

WHEREAS, the Airport Authority has prepared a contract selling the timber to Lance Land & Timber company of Queen City, Texas;

NOW, THEREFORE, BE IT RESOLVED BY THE CITY COUNCIL OF THE CITY OF TEXARKANA, TEXAS:

SECTION 1: Consents to the sale of Texarkana Airport timber as requested and authorizes and directs the city manager to execute the necessary documentation certifying the city council's consent.

SECTION 2: That this Resolution shall be in full force and effect from and after its passage and approval.

PASSED AND APPROVED in Regular Council Session on this the 27th day of May, 2014.

ATTEST:

_____ _____

JENNIFER EVANS, CITY SECRETARY BOB BRUGGEMAN, MAYOR

Attachment: 2014-061 RES Consenting to the Sale of Airport Timber (1106 : Resolution 2014-061 Consenting the Sale of Airport Timber)

TEXARKANA REGIONAL AIRPORT

1 May 2014

Memorandum For: Mr. John Whitson, ICMA-CM
City of Texarkana, Texas

Subject: Airport Timber Harvest & Replanting

Dear Mr. Whitson:

On behalf of the Airport Authority, I request the Texarkana, Texas City Council approve the sale of approximately 35 acres of timber located on Texarkana Regional Airport. City Ordinances state, *"No property entrusted to the (Airport) Authority shall be sold, transferred or in any manner encumbered without the written consent of the governing bodies of said cities."*

At its 17 April 2014 meeting, the Authority recommended thinning and clear cutting certain sections of pine timber and hardwood (Atch 1). This action is in accordance with the Airport Timber Management Plan developed by D & S Forestry Service. The harvested areas will be replanted with two exceptions. The footprint associated with the planned new terminal and the area along the line-of-sight from the Aircraft Rescue and Fire Fighting (ARFF) facility to the approach ends of Runways 31 and 04 (Atch 2) will be seeded with Bahia grass to control erosion. The FAA recommends ARFF stations have a clear view of all approach zones to the airport.

The Authority has received a high bid ($/ton) from Lance Land and Timber (Atch 3). Actual proceeds will be determined at the scale. After the cost to replant the cleared sections, the estimated profit of approximately $15K will be used to leverage grant funds.

Please place this request on the consent agenda for the earliest possible meeting of the City Council. We are available to answer any questions you or your staff may have.

Respectfully,

Stephen Luebbert
Airport Director

3 Atch.
1. Texarkana Airport Authority Resolution
2. Graphic
3. D&S Forestry Contract

201 Airport Drive • Texarkana, AR-TX 71854 • (870) 774-2171 FAX (870) 775-

Attachment: 2014-061 ATTH 01 Airport Timber Harvest Request and Contract (1106 : Resolution 2014-061 Consenting the Sale of Airport

TEXARKANA AIRPORT AUTHORITY RESOLUTION No. 41714C
A RESOLUTION BY THE TEXARKANA AIRPORT AUTHORITY APPROVING THE SALE OF AIRPORT TIMBER

WHEREAS, the Airport Authority is entrusted with the management of timber on the airport and owned by the Cities of Texarkana Arkansas and Texas, and having considered clear cutting and thinning approximately 35 acres of timber targeted by a timber management plan developed by D&S Forestry Service, a copy of which is attached hereto and marked Exhibit A; and

WHEREAS, the Airport Authority has received a high scale bid from Lance Land and Timber of Queen City, Texas for harvesting the timber at the following rates, a copy of which is attached hereto and marked Exhibit B; and,

Pine Pulpwood For $9.50 Per Ton
Hardwood Pulpwood For $15.00 Per Ton
Pine Sawtimber For $23.00 Per Ton
Mixed Hardwood Sawtimber For $30.00 Per Ton

WHEREAS, the Texarkana Airport Authority has determined that the proposed clear cutting and thinning of certain sections is required to provide for the safety of aircraft operations by reducing habitat and to provide for line-of-sight of runways 04 and 31 from the Public Safety Center; and,

WHEREAS, Section 3-13 (C) of the municipal codes of the City of Texarkana, Texas and Section 6-31 (3) of the City of Texarkana, Arkansas requires written consent of the City Council of Texarkana, Texas and the Board of Directors of Texarkana, Arkansas before the Authority can sell property entrusted to it; and,

WHEREAS, the timber cutting and replanting as identified D&S Forestry and has determined that it is in the best interest of the Airport to consent to such a proposal;

NOW, THEREFORE, BE IT RESOLVED BY THE TEXARKANA AIRPORT AUTHORITY THAT:

SECTION 1. The Timber Sale Contract offering be accepted to accomplish the harvest for the reasons stated herein and to seek the concurrence of the governing bodies of the Cities of Texarkana, Texas and Texarkana, Arkansas.

SECTION 2. Mr. Stephen Luebbert, Airport Director is authorized to sign the timber contract on behalf of the Airport Authority and Mrs. Shannon Elliott is authorized to witness said signing.

Adopted this 17th day of April, 2014

ATTEST

Stephen P. Luebbert, Director

SIGNED

Raymond W Jordan

Raymond W. Jordan, Vice Chairman

Attachment: 2014-061 ATTH 01 Airport Timber Harvest Request and Contract (1106 : Resolution 2014-061 Consenting the Sale of Airport

ATCH 1

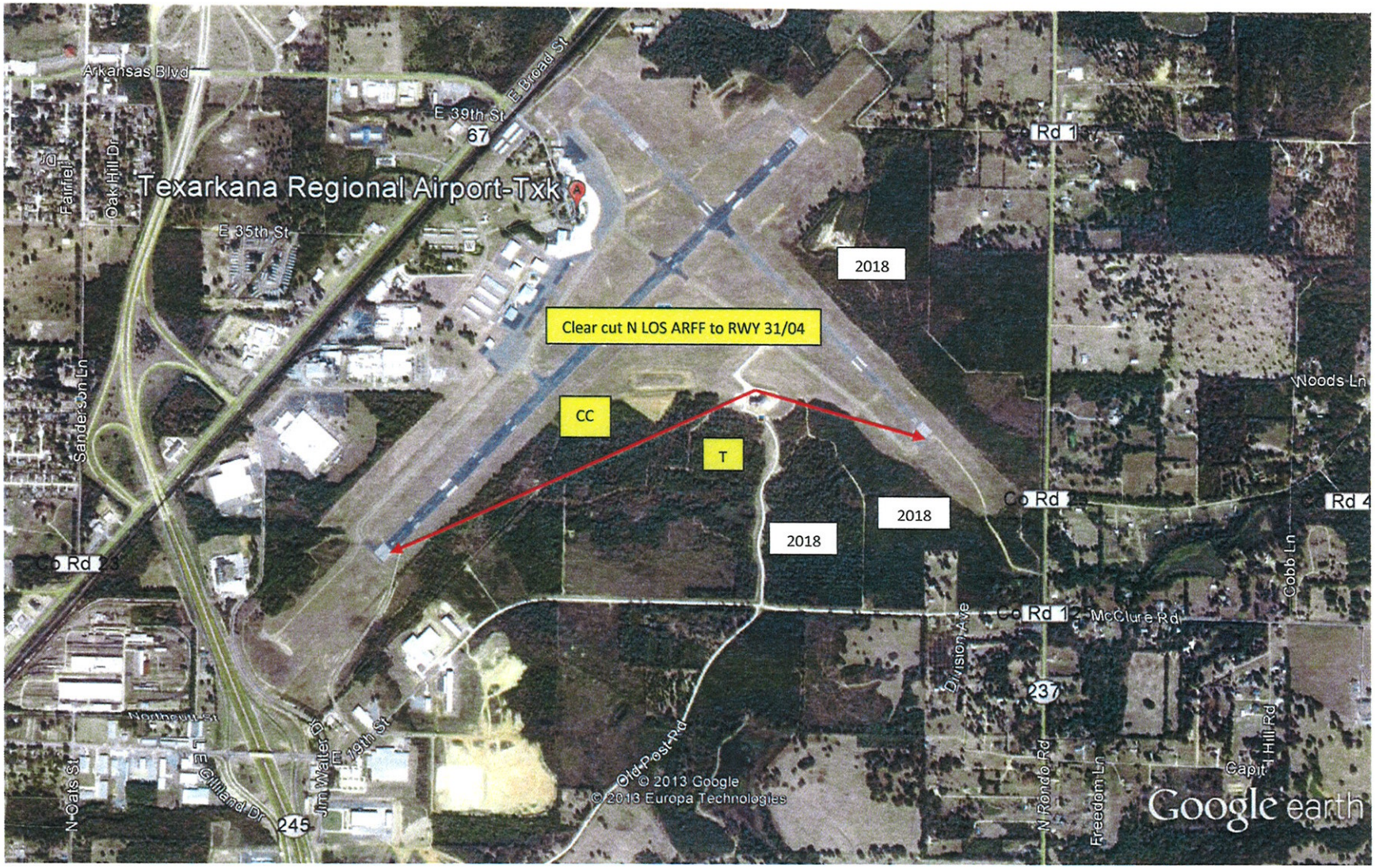
Texarkana Regional Airport-Txk
Clear cut N LOS ARFF to RWY 31/04
CC
T
2018
2018
2018
Arkansas Blvd
E 39th St
E Broad St
E 35th St
Oak Hill Dr
Fairfield
Sanderson Ln
Co Rd 23
Co Rd 1
Co Rd 12
McClure Rd
Noods Ln
Cobb Ln
Division Ave
N Rondo Rd
Freedom Ln
Old Post Rd
Jim Walter Dr
19th St
Northern St
N Oats St
Gillland Dr
67
237
245
© 2013 Google
© 2013 Europa Technologies
Google earth

STATE OF ARKANSAS
COUNTY OF MILLER

Timber Sale Contract

This agreement entered into this_____day of _____, 2014, between "TEXARKANA AIRPORT AUTHORITY", hereinafter called "Seller", whose address is 201 Airport Drive, Texarkana, Arkansas, 71854, do hereby sell and convey unto Lance Land & Timber, whose address is office address at P.O Box 58, Queen City, Texas 75572, hereinafter called "Buyer" and said Buyer agrees to purchase the following timber, to-wit:

ALL PINE AND HARDWOOD TIMBER LOCATED ON THAT CERTAIN PARCEL OF LAND IN MILLER COUNTY, ARKANSAS DESCRIBED AS FOLLOWS TO WIT:

ALL PINE AND HARDWOOD TIMBER AS DESCRIBED ON THE PLAT ATTACHED, LOCATED IN THE SOUTHWEST QUARTER OF THE SOUTHWEST QUARTER (SW1/4 OF SW1/4) OF SECTION 15 AND THAT PART OF THE SOUTHEAST QUARTER OF THE SOUTHEAST QUARTER (SE1/4 OF SE1/4) OF SECTION 16-TOWNSHIP 15 SOUTH-RANGE 28 WEST. REFER TO THE PLAT ATTACHED FOR THE DESIGNATED CUTTING AREA. THIS PLAT IS AN INTERGRAL PART OF THIS CONTRACT. THIS IS A CLEAR CUT OPERATION, EXCEPT FOR APPROXIMATELY 2 ACRES AND ONLY TIMBER MARKED WITH ORANGE PAINT IS TO BE CUT AND REMOVED WITHIN THIS DESIGNATED SITE.

Condition of Sale:

1. **Duration:** Buyer shall have twelve months (12) from the effective date hereof within to cut and remove the timber herein conveyed. This contract expires at 6:00 P.M., March 1, 2015. The Seller, upon a bona fide written request from the Buyer, may grant an extension of 30 days for the completion of the logging operation. All timber remaining on the property at the expiration of said period shall be and remain the property of the Seller, its successors and assigns.

2. **Price:** Purchaser agrees to pay to the seller for all authorized timber harvested within the designated cutting area at the price as set forth in the "Memorandum of Timber Purchase Contract". The timber is being sold on a per ton basis and payments shall be made on weekly basis to Texarkana Regional Airport. The seller hereby sells, conveys, and warrants unto Buyer all timber as reference above.

3. **Severance Tax**: The buyer shall pay any severance taxes applicable to the timber bought under the terms of this contract.

4. **Warranty**: Seller warrants that Seller is the sole owner of said timber, that Seller has the absolute and unconditional right to sell said timber and that there is no lien, mortgage or other encumbrance outstanding against said timber. Seller hereby agree to defend and indemnify said Buyer against any cost, expense, claim or demand incurred by or asserted against Buyer by any person, firm, or corporation claiming an interest in said timber in conflict with Seller's warranty hereunder.

5. **Indemnification:** Buyer agrees to indemnify and hold Seller free and harmless from any and all claims of Buyer's employees or other parties as a result of or growing out of Buyer's operations hereunder, and from any liabilities whatsoever including fire, personal damage, property damage, etc. that shall be Buyer's responsibility.

6. **Taxes and Insurance**: The buyer agrees to carry all necessary and required Workmen's Compensation, Liability, and other insurance; to pay Social Security, withholding and all taxes on workmen required by law and to hold Seller harmless for these and all other acts performed by him under this contract.

7. **Buyer:** The Buyer shall conduct logging operations in accordance with best forestry management practices, the principle of the Sustainable Forestry Initiative; that will result in the least possible damage to trees and saplings not being cut; shall repair, at purchaser's own expense, any damage to fences, culverts gates, roads, or other appurtenances and agrees to remove trash and litter and limbs, tops and debris from creeks, streams and fields at the conclusion of its harvesting operation.

Attachment: 2014-061 ATTH 01 Airport Timber Harvest Request and Contract (1106 : Resolution 2014-061 Consenting the Sale of Airport

AICHS

8. **Slash and Debris Disposal:**

Location of landing and decking areas must be agreed upon by the seller's forester and buyer before any logging operations begin. No landing or decking area shall be located within 100 feet of any planted pine areas. Buyer shall not fell any trees into planted pine plantation area located adjacent to the harvest area, nor enter onto the area with logging equipment or personal vehicle. Any damage incurred to the planted pine seedlings from the logging operation shall be fixed at the buyer's expense. Slash and debris accumulated from delimbing operation shall be piled at the landing site or at designed site(s). When feasible and within the designated cutting area, hardwood sawtimber shall be delimbed at landing site and the debris piled in the designated areas. Buyer agrees to push logging debris to the sides of loading areas in order to facilitate the replanting of these areas when the logging operation is completed.

The buyer is free to log anytime weather permits when rutting is kept to a minimum. To avoid unnecessary damage and rutting to the property, due to wet weather or unsuitable soil types, all logging operations will cease on that portion of the harvest area, until the land is dry enough to support the logging equipment and trucks.

All entrance and service roads are to be maintained in a good state of condition.

Unauthorized Cutting: Buyer and seller agree that in the event any merchantable timber not specified to be cut and removed herein is in fact cut and removed, except where necessary and incidental to the removal of the purchase timber, Buyer shall pay to Seller as liquidation damages a sum equal to three times the current market price for the type and class of merchantable timber wrongfully cut and removed. (N/A).

9. **Easement**: Seller grants to Buyer such easement over and above said lands as may be convenient or necessary to cut and remove the timber hereunder. Grantee, its successors and assigns, shall have the right to construct and use new roads, to widen, repair and use existing roads, and to construct and use loading areas, upon and across said land as may be reasonably necessary for the cutting and removal of said timber from said lands. Location of said roads, landings, and loading areas **shall** be mutually agreed upon by the Buyer and Seller's Forester.

10. **Endangered Species**: Grantor represents that there are no threatened or endangered species of fish, wildlife, plants or habitat therefore on any of the land subject to this agreement to the best of Grantor's knowledge. If any restrictions by law or governmental regulation or if any action threatened action from state, federal or local government agency prevents Grantee from cutting or removing the timber purchased hereunder, grantor hereby agrees to reimburse Grantee for the volume that is standing on the tract as a result of such regulation, action or threatened action. Said volume to be determined by joint cruise conducted by Grantors and Grantee.

11. **Notification**: Buyer agrees to notify Seller's Forester, D & S Forestry Service, three days prior to the beginning or subsequent renewal of any and all logging operations.

12. **Termination:** Seller may suspend operation, including removal of cut timber, if conditions of the contract are violated. The violation of any conditions of said contract shall be sufficient grounds for termination.

13. **Consent of Sale:** The City of Texarkana, Arkansas, and the City of Texarkana, Texas, consent to the sale and removal of timber as set forth herein, and direct that all proceeds due hereafter be made directly to the Texarkana Airport Authority.

WITNESS THE SIGNATURE of the parties hereto this _____ day of _____, 2014

BUYER: _____
AUTHORIZED AGENT (LANCE LAND & TIMBER)

WITNESS: _____

Signature Page Attached for Seller

Attachment: 2014-061 ATTH 01 Airport Timber Harvest Request and Contract (1106 : Resolution 2014-061 Consenting the Sale of Airport

In WITNESS WHEREOF, SELLER and BUYER have caused this Contract to be duly executed on the date first hereinabove written.

TEXARKANA AIRPORT AUTHORITY

Witness:

_____
Shannon Elliott, Finance Director

For: _____
STEPHEN P. LUEBBERT, DIRECTOR
Texarkana Regional Airport

_____
City Secretary

For: _____
JOHN A. WHITSON, CITY MANAGER
City of Texarkana, Texas

_____
City Clerk

For: _____
HAROLD E. BOLDT, CITY MANAGER
City of Texarkana, Arkansas

Attachment: 2014-061 ATTH 01 Airport Timber Harvest Request and Contract (1106 : Resolution 2014-061 Consenting the Sale of Airport

MEMORANDUM OF TIMBER PURCHASE CONTRACT

Notice is hereby given that Lance Land & timber purchased Texarkana Regional Airport, by Timber Sale Contract dated _____,2014_ the following described timber:

ALL PINE AND HARDWOOD TIMBER LOCATED ON THAT CERTAIN PARCEL OF LAND IN MILLER COUNTY, ARKANSAS DESCRIBED AS FOLLOWS TO WIT:

ALL PINE AND HARDWOOD TIMBER AS DESCRIBED ON THE PLAT ATTACHED, LOCATED IN THE SOUTHWEST QUARTER OF THE SOUTHWEST QUARTER (SW1/4 OF SW1/4) OF SECTION 15 AND THAT PART OF THE SOUTHEAST QUARTER OF THE SOUTHEAST QUARTER (SE1/4 OF SE1/4) OF SECTION 16-TOWNSHIP 15 SOUTH-RANGE 28 WEST. REFER TO THE PLAT ATTACHED FOR THE DESIGNATED CUTTING AREA. THIS PLAT IS AN INTERGRAL PART OF THIS CONTRACT. THIS IS A CLEAR CUT OPERATION, EXCEPT FOR APPROXIMATELY 2 ACRES AND ONLY TIMBER MARKED WITH ORANGE PAINT IS TO BE CUT AND REMOVED WITHIN THIS DESIGNATED SITE.

As per the acceptance of the Timber Sale Contract, Lance Land & Timber agrees to pay to Seller as follows:

Pine Pulpwood	$ 9.50 Per Ton
Hardwood Pulpwood	$ 15.00 Per Ton
Pine Sawtimber	$ 23.00 Per Ton
Mixed Hardwood Sawtimber	$ 30.00 Per Ton (Min. 12" Top)

Payments shall be made on a weekly basis to TEXARKANA REGIONAL AIRPORT, (Seller) at the rates listed above. Weekly load records shall be furnished to (sellers) forester (D & S Forestry Service). This memorandum agreed upon by and between Lance Land & Timber (Buyer) and Texarkana Regional Airport (Seller/Owner).

In WITNESS WHEREOF, SELLER and BUYER have caused this Contract to be duly executed on the date first hereinabove written.

WITNESSESS:

_____

SELLER: Texarkana Regional Airport

BY:_____

Authorized Agent (Stephen P. Luebbert, Director)

WITNESSES:

_____

BUYER: _____

Lance Land & Timber (Doug Lance, Owner)

Section 15,16 Twp 15S Range 28W Acres 35

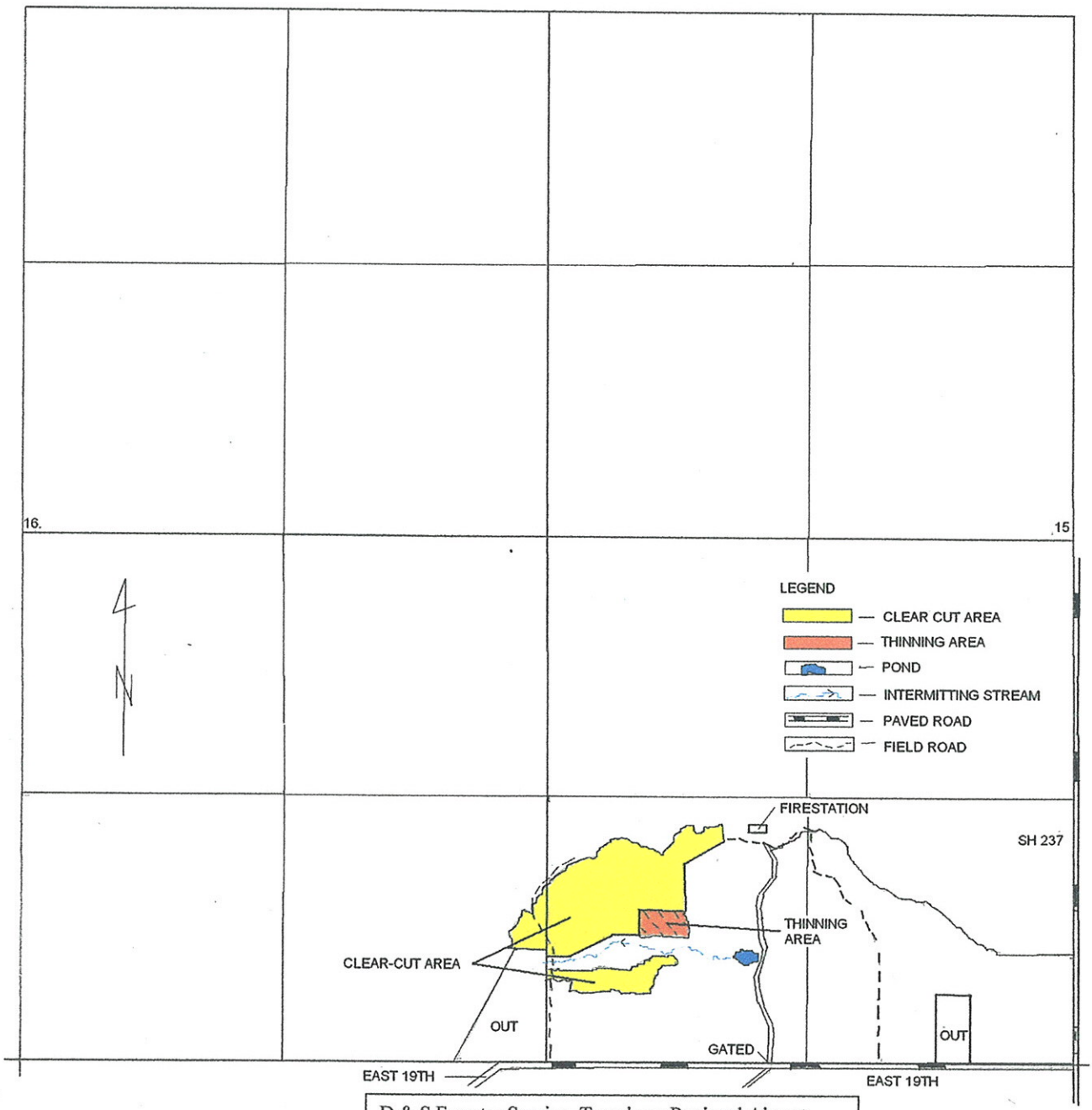

D & S Forestry Service- Texarkana Regional Airport
Plat Prepared For: Steve Luebbert, Airport Dir.
Inspected Date: 01-13-2014 Miller County, Ark.
Type: Timberland
Date of Purchase: N/A

Attachment: 2014-061 ATTH 01 Airport Timber Harvest Request and Contract (1106 : Resolution 2014-061 Consenting the Sale of Airport

City of Texarkana, Texas

Version: J

Briefing Sheet

Update Date: 5/20/2014 4:20 PM

Lead Department:	Municipal Services and Public Works	**Action Officer:**	Shirley Jaster, Director of Community and Public Works
Subject:	Public Hearing and consider Ordinance No. 2014-055 authorizing the City Manager to execute the Third Addendum to Declaration of Gift Agreement between the City of Texarkana, Texas and the Board of Regents of The Texas A&M University System to revise and amend certain obligations remaining under the "Declaration of Gift Agreement" executed November 7, 2005 as amended by the" First and Second Declaration of Gift Agreement" executed February 11, 2011 and providing for a limited funding in the amount of $235,000, payable to Texas A&M University - Texarkana.		

Briefing:	5/27/2014	**Public Hearing:**	5/27/2014	**Second Briefing:**	**Council Vote:** 5/27/2014

Item Schedule
Schedule 2: Brief once - vote once (two weeks)

Updates/History of Briefing:

Not Applicable

Executive Summary and Background Information:

In 2005 a Declaration of Gift Agreement between the City and TAMU was struck concerning construction of a road to provide access to the TAMU Texarkana campus. This agreement was revised in 2011 by a First and Second Addendum.

Now a Third Addendum has been proposed. The Third Addendum will provide limited funding in the amount of $235,000 payable to TAMU-T towards the construction of a road from University Avenue to the student dormitory on the TAMU-T campus. The Third Addendum will also acknowledge that the City has performed to the satisfaction of the A & M System all City duties and responsibilities set forth in the Declaration of Gift Agreement. A financial statement of the history of this agreement addendums and a map of the road to be constructed is also attached.

Potential Options:

- "None"
-

Fiscal Implications:

Funding source for the payment will be from the 2003 Bond fund.

Staff Recommendation:

Staff recommends the approval of the Ordinance.

Advisory Board/Committee Review:

NONE

City of Texarkana, Texas

Board/Committee Recommendation:

(
"NOT APPLICABLE")

Advisory Board/Committee Meeting Date and Minutes:

"NOT APPLICABLE"

Attachments

a. Goals and Perspectives (DOCX)
b. Ordinance 2014-055 Third Addendum (DOCX)
c. Attachment Ord 2014-055 Third Addendum (PDF)
d. History of Gift Agreement and addendum (DOCX)
e. Declaration of Gift Agreement (PDF)
f. First Adendum Declaration of Gift Agreement (PDF)
g. Second Addendum Declaration of Gift Agreement (PDF)
h. Road Exhibit 11X17 (PDF)

Staff Coordination

Finance	Charlie Bassett	Review	Completed	05/05/2014 1:16 PM
City Engineer	Kyle Dooley	Review	Completed	05/05/2014 1:28 PM
Public Information Officer		Lisa Thompson	PIO Review	Completed 05/05/2014 1:33 PM
City Manager	John Whitson	City Manager Review	Completed	05/05/2014 2:05 PM
City Council	Jennifer Evans	Meeting	Completed	05/28/2014 1:27 PM

Meeting History

05/12/14 City Council MOVED FORWARD Next: 05/27/14
Shirley Jaster, Assistant City Manager, briefed this item.

City of Texarkana, Texas

Developing Perspectives and Goals Pending Approval by the City Council:

Perspectives	Goals
Serve the Community	☐ Promote an Environmentally Sensitive & Livable Community ☐ Provide a Safe Community ☑ Deliver Quality Services ☐ Foster a Healthy Community
Run the Operations	☐ Enhance Community Preparedness & Responsiveness ☑ Maximize Partnership Opportunities ☐ Provide Courteous & Responsive Customer Service ☑ Model a Positive City Image ☑ Deliver Efficient Services ☐ Cultivate Community Involvement & Access
Manage the Resources	☐ Maintain Fiscal Strength ☐ Maximize Utilization & Resources ☑ Invest in Infrastructure & Transportation
Develop Personnel	☐ Develop a Skilled & Diverse Workforce ☐ Create a Positive & Rewarding Work Culture

Perspectives and Goals Additional Comments:

Fulfill inter-local partnership agreements

Resource Impact:

Staff time required if item is approved:	Select One By Clicking Here

Other Potential Impacts:

"NONE APPLICABLE"

Public Information Plan:

☐	Newspaper Notice (Required by Statute)	☐	Public Hearing (Required by Statute)
☐	Public Forum/Input Session	☐	Press Release
☐	E-News Distribution	☐	Website Notice
☐	Social Media (Twitter, Facebook, etc.)	☐	Special Mailing
☐	Flyers Posted	☐	Banners Posted
☐	Survey	☐	Automated Phone Call
☑	None Required	☐	

Other:

Attachment: Goals and Perspectives (1102 : Ordinance 2014-055 Third Addendum to agreement between TAMU and City)

ORDINANCE NO. 2014 – 055

AN ORDINANCE OF THE CITY COUNCIL OF THE CITY OF TEXARKANA, TEXAS; AUTHORIZING THE CITY MANAGER TO REVISE AND AMEND CERTAIN OBLIGATIONS REMAINING UNDER THE "DECLARATION OF GIFT AGREEMENT" AS AMENDED BY THE FIRST AND SECOND ADDENDUM EXECUTED FEBRUARY 11, 2011 AND PROVIDING LIMITED FUNDING IN THE AMOUNT OF $235,000 PAYABLE TO TEXAS A & M UNIVERSITY – TEXARKANA TOWARDS THE CONSTRUCTION OF A ROAD FOR THE STUDENT DORMITORY; PROVIDING FOR A REPEALER CLAUSE; PROVIDING A SEVERABILITY CLAUSE; AND ESTABLISHING AN EFFECTIVE DATE.

WHEREAS, the City Council of the City of Texarkana, Texas, authorized the execution of the First and Second Addendum to the "Declaration on Gift Addendum on February 11, 2011; and

WHEREAS, the City recognizes a change in the Texas A & M University–Texarkana infrastructure construction priority schedule to provide a dormitory access road; and

WHEREAS, it is in the best interest of the City of Texarkana, Texas to amend and revise the current agreement to fulfill and complete the duties and responsibilities to the satisfaction of the A & M System.

NOW, THEREFORE, BE IT ORDAINED BY THE CITY COUNCIL OF THE CITY OF TEXARKANA, TEXAS:

SECTION 1: That the City Council authorizes the City Manager to revise and amend certain obligations remaining under the "Declaration of Gift Agreement" as amended by the First and Second Addendum executed February 11, 2011 and providing limited funding in the amount of $235,000 payable to Texas A & M University-Texarkana towards the construction of a Road for the student dormitory attached as the Third Addendum shown as" Exhibit A";

SECTION 2: That the provisions of Article 2 of the 'Second Addendum to the Declaration of the Gift Agreement" are deleted;

SECTION 3: Within ten (10) business days of the effective date of the Third Addendum, the City agrees to provide limited funding in the amount of $235,000, payable to Texas A & M University- Texarkana for the construction of a road from University Avenue to the student dormitory on the Texas A & M University-Texarkana campus.

SECTION 4: The A & M System acknowledges that the City has performed to their satisfaction all the duties and responsibilities set for in the Declaration of Gift Agreement and all addenda to that agreement.

SECTION 5: That in case a section, clause, sentence or part of this Ordinance shall be deemed or adjudged by a Court of competent jurisdiction to be invalid, then such invalidity shall not affect, impair or invalidate the remainder of this Ordinance.

SECTION 6: That all ordinances or parts of ordinances in conflict herewith are specifically repealed to the extent of such conflict.

SECTION 7: That this Ordinance shall be in full force and effect after its passage and approval.

PASSED AND APPROVED in Regular Council Session on this the 27th day of May, 2014.

ATTEST:

_____ _____

JENNIFER EVANS, CITY SECRETARY BOB BRUGGEMAN, MAYOR

Attachment: Ordinance 2014-055 Third Addendum [Revision 8] (1102 : Ordinance 2014-055 Third Addendum to agreement between TAMU and

Attachment: Attachment Ord 2014-055 Third Addendum (1102 : Ordinance 2014-055 Third Addendum to agreement between TAMU and City)

Third Addendum to Declaration of Gift Agreement

This Third Addendum to Declaration of Gift Agreement, by and between the City of Texarkana, Texas ("City") and the Board of Regents of the Texas A&M University System ("A&M System"), is to revise and amend certain obligations remaining under the parties' "Declaration of Gift Agreement" executed November 7, 2005, as amended by "First Addendum to Declaration of Gift Agreement" executed February 11, 2011, and "Second Addendum to Declaration of Gift Agreement" executed February 11, 2011.

For good and valuable consideration, the receipt and sufficiency of which is acknowledged, City and the A&M System agree as follows:

Article 1
City Contribution to Dormitory Access Road

1.1 The provisions of Article 2 of the "Second Addendum to Declaration of Gift Agreement" are deleted.

1.2 Within ten (10) business days of the effective date of this Third Addendum, City agrees to provide limited funding in the amount of $235,000, payable to Texas A&M University-Texarkana, towards the construction of a road from University Boulevard to the student dormitory on the Texas A&M University-Texarkana campus. The A&M System shall own said road and agrees to assume full and total responsibility for the construction, maintenance, and repair of this road.

Article 2
Acknowledgment of City Performance

2.1 Upon City's payment of the amount set forth in section 1.2, above, the A&M System acknowledges that City has performed to the satisfaction of the A&M System all City duties and responsibilities set forth in the "Declaration of Gift Agreement" and all addenda to that agreement.

EXECUTED to be effective the 6 day of May, 2014.

BOARD OF REGENTS OF THE TEXAS A&M UNIVERSITY SYSTEM, an agency of the State of Texas

By: _____

JOHN SHARP
Chancellor
The Texas A&M University System

System Real Estate Office
OFFICIAL DOCUMENT

RECOMMEND APPROVAL:

EMILY CUTRER
President
Texas A&M University-Texarkana

APPROVED AS TO FORM:

GINA M. JOSEPH
Assistant General Counsel
Office of General Counsel
The Texas A&M University System

CITY OF TEXARKANA, TEXAS

By: _____
JOHN A. WHITSON, ICMA-CM
City Manager

ATTEST:

_____
JENNIFER EVANS, CAP
City Secretary

APPROVED AS TO FORM:

JEFFERY C. LEWIS
City Attorney
Atchley, Russell, Waldrop & Hlavinka, LLP

System Real Estate Office
OFFICIAL DOCUMENT

Attachment: Attachment Ord 2014-055 Third Addendum (1102 : Ordinance 2014-055 Third Addendum to agreement between TAMU and City)

Financial Overview

The Third Addendum to Declaration of Gift Agreement is the final step in a series of agreements with Texas A& M University-Texarkana that have been funded by bond proceeds originally intended to complete infrastructure projects related to the University in the areas between Richmond Road and Summerhill Road, and within University property. Addendum One was executed in February 2011, and required a City contribution to the University to assist in the construction of a road on University property known as the "campus road". The contribution amount was $100,000, and the road is owned by the University, saving future city maintenance costs. An additional agreement called for a City contribution to construction of an additional University owned road known as the "student housing access road" in the amount of $350,750. The value realized by the City in both of these agreements was savings of future maintenance costs and savings of construction cost due to a change in the original overall road structure within the University.

Addendum Two was also executed in February 2011, and involved an exchange of land within the University Planning District, and a City contribution of $235,000 towards a University road to be constructed to provide access from University Boulevard to the site of a future sports facility. This road is known as the "tennis road". Again, value realized by the City is in savings of future maintenance and adjusted construction cost from changing the original path of University Boulevard.

Addendum Three recognizes a change in the University's infrastructure construction priority schedule, and provides for a reclassification of the City's contribution from Addendum Two from the "tennis road" to a soon to be constructed University owned road known as the "dormitory access road". Funding for this contribution will be made from the City's 2003 Bond Fund, and execution of the Addendum Three terms will complete the City's obligations under the original Declaration of Gift Agreement and all related addendums.

DECLARATION OF GIFT AGREEMENT BETWEEN THE CITY OF TEXARKANA, TEXAS AND THE TEXAS A&M UNIVERSITY SYSTEM FOR THE USE AND BENEFIT OF TEXAS A&M UNIVERSITY -TEXARKANA

THE CITY OF TEXARKANA, TEXAS, (hereafter "**TEXARKANA**") by this instrument ("Agreement") expressly declares its intent to gift property to the **BOARD OF REGENTS, THE TEXAS A&M UNIVERSITY SYSTEM,** (hereafter "**TAMUS**"), for the use and benefit of **TEXAS A&M UNIVERSITY - TEXARKANA** (hereafter "A&M-Texarkana") and for the purpose of promoting the public purposes and the betterment of the citizens of Texarkana, Texas, and the surrounding area related to higher education as advanced by A&M - Texarkana.

This Agreement supersedes any other oral or written manifestations of donative intent whether written or oral made by and between **TEXARKANA** and **TAMUS**.

The Parties expressly acknowledge **TEXARKANA** owns a tract of land described in Exhibit "A", attached and made a part of this Agreement for all purposes and referred to in this Agreement as the "TEXARKANA Gift Tract".

TEXARKANA and **TAMUS** each acknowledge and agree that this gift is subject to a Possibility of Reverter. In the event **TAMUS** does not commence the construction of a campus infrastructure on the TEXARKANA Gift Tract on or before the tenth (10th) anniversary of the transfer of title to **TAMUS**, the TEXARKANA Gift Tract ownership, including title and possession, will revert to **TEXARKANA** without the requirement of any action on the part of **TAMUS** or **TEXARKANA**. For purposes of this Agreement the term "construction of a campus infrastructure" means any and all forms of on-site physical preparation, clearing, or actual construction on the TEXARKANA Gift Tract.

System Real Estate Office
OFFICIAL DOCUMENT

Prepared by Associate General Counsel
New Campus at TAMU-T
OGC File No. 2003-000683
EDG-10/28/2005

Attachment: Declaration of Gift Agreement (1102 : Ordinance 2014-055 Third Addendum to agreement between TAMU and City)

The Parties further understand and agree that as part of the consideration for **TAMUS** to invest significant State of Texas resources in the planning, design, construction and operation of a new campus on the TEXARKANA Gift Tract, **TEXARKANA** will perform or have performed the following:

(1) The extension of the water and sewer systems of the City of Texarkana to an agreed point on the Texarkana Gift Tract boundary and in such capacity as the parties agree would support the reasonable needs of the campus. The City further agrees to allow other providers of underground utilities the use of **TEXARKANA's** utility right-of-way for placement of utilities therein at a place and in a manner which in the sole judgment of **TEXARKANA** will not unreasonably interfere with **TEXARKANA's** use of its utility right-of-way. The parties agree that the following existing utility easements, as described in Exhibit "D" attached shall be retained in perpetuity by **TEXARKANA** for its exclusive use in the Gift Deed conveyance document. The Parties further agree that the following proposed utility (water main, sanitary sewer main, and fiber optic cable) easements, as described in Exhibit "E" attached shall be retained in perpetuity by **TEXARKANA** for its exclusive use in the Gift Deed conveyance document. If **TEXARKANA** determines that it no longer has need of one or more of those easements, **TEXARKANA** will promptly notify **TAMUS** of its intent to abandon such easement(s) and will release, by an appropriate written release, such easement(s) to **TAMUS** without any action being required by or on behalf of **TAMUS**. **TEXARKANA** further agrees that should it become necessary to excavate the utility easement described as Utility Easement 2 in Exhibit "E" attached hereto for the purpose of maintenance or repair **TEXARKANA** will repair the surface and damage to any improvement on the surface which results from those maintenance or repair operations; provided however, for the other easements described in Exhibits "D" and "E" attached hereto, should it become necessary to excavate any of those easements for the purpose of maintenance or repair **TEXARKANA** will not be responsible for damage to or repair of any improvements on the surface caused during those

System Real Estate Office
OFFICIAL DOCUMENT

Attachment: Declaration of Gift Agreement (1102 : Ordinance 2014-055 Third Addendum to agreement between TAMU and City)

maintenance or repair operations.

(2) **TEXARKANA** will construct, or cause to be constructed, a major thoroughfare connecting Richmond Road and Summerhill Road. This roadway will be constructed at **TEXARKANA's** expense. **TAMUS** will determine the alignment of this thoroughfare as it crosses the TEXARKANA Gift Tract. For purposes of this Agreement, **TAMUS** and **TEXARKANA** agree the alignment of the road will be generally as shown on Exhibit "C", attached hereto and made a part for all purposes. **TAMUS** and **TEXARKANA** agree that construction of the road will be completed in two (2) phases, as shown on Exhibit "C." Phase I is depicted as being from Richmond Road to the main entrance of the campus and continuing into the interior of the campus to the first set of driveways within the campus. Phase I is to be completed and open for traffic by no later than September 1, 2007. The Parties acknowledge that a residential structure is presently located in an area that is not a part of the TEXARKANA Gift Tract but is located within the area of construction for the Phase I roadway to be constructed by **TEXARKANA**. **TEXARKANA** agrees to demolish and remove this residential structure, at its cost, during the Phase I road construction. **TAMUS** agrees that prior to the Phase I road construction, **TAMUS** will conduct an investigation to determine if there are any environmental problems associated with the residential structure and, if necessary, will mitigate such problems at its expense. Phase II will continue from the point of termination of Phase I and continue to Summerhill Road. Construction of Phase II will commence and be completed on a schedule that is mutually agreeable to the Parties. It is the intent of the Parties that Phase II be completed prior to commencement of freshman and sophomore classes at A&M-Texarkana. However, notwithstanding any provision in this Agreement to the contrary, the deliverable date for the Phase I thoroughfare of September 1, 2007, and the deliverable date for the Phase II thoroughfare of a date "prior to the commencement of freshman and sophomore classes at A & M Texarkana," are conditioned upon and subject to the completion by **TAMUS**—as evidenced by written notification from the Corps of Engineers at least one year prior to each such respective deliverable date—of the mitigation of

System Real Estate Office
OFFICIAL DOCUMENT

Prepared by Associate General Counsel
New Campus at TAMU-T
OGC File No. 2002-0906383
EDG 10/28/2005

Attachment: Declaration of Gift Agreement (1102 : Ordinance 2014-055 Third Addendum to agreement between TAMU and City)

any and all wetlands that might be within the thoroughfare right-of-way and construction staging areas. If **TAMUS** fails to complete the required wetland mitigation in timely fashion, the respective deliverable dates of Phase I and Phase II will each be adjusted so that the revised deliverable date for each respective phase will be a date not less than one year after the completion of the required mitigation of wetlands that might be within the thoroughfare right-of-way and construction staging areas.

TAMUS will grant to **TEXARKANA** a Conditional Road Right-of-Way Easement for this thoroughfare which, pursuant to statute, will be good for so long as the right-of-way is used as a public roadway. The Conditional Road Right-of-Way Easement will vest in **TEXARKANA** the right to construct and maintain curbs, gutters, drainage systems, street lighting systems and roadway surfaces within the limits of the right-of-way as it crosses the TEXARKANA Gift Tract. The Parties agree that such an easement will be for pedestrian and vehicular access only and will not be construed as a utility easement. In addition, **TAMUS** will grant to **TEXARKANA** the necessary temporary construction easements for those areas lying outside of the limits of the Conditional Road Right-of-Way Easement which are necessary to construct the roadway as contemplated. Except for the installation and maintenance of the **TEXARKANA** water, sewer, and fiber optic utility easements retained for the exclusive use of **TEXARKANA**, provision for which is made hereinabove, the installation and maintenance of any utility systems within this right-of-way corridor will be through separate utility easement(s) which will be limited to periods of no longer than ten (10) years but which may be renewable upon the election of the Parties.

The Conditional Road Right-of-Way Easement will further specify that A&M-Texarkana will have the right to landscape and maintain or, at its election, to not landscape but simply to mow and maintain the median within the right-of-way. **TEXARKANA** will not be responsible for maintaining the median within this right-of-way, other than its signage, traffic signals or lighting systems.

System Real Estate Office
OFFICIAL DOCUMENT

Attachment: Declaration of Gift Agreement (1102 : Ordinance 2014-055 Third Addendum to agreement between TAMU and City)

The Conditional Road Right-of-Way Easement will further provide **TAMUS** with the ability to restrict the construction of any improvements within the median or the erection of signage, other than those signs, traffic signals and lighting systems necessary for traffic control and life safety issues, within the median of the TEXARKANA Gift Tract. The Parties agree that any landscaping or improvements constructed within the median will provide for necessary line of sight angles at all intersections of the subject right-of-way and other streets within the TEXARKANA Gift Tract.

(3) **TEXARKANA** will annex the TEXARKANA Gift Tract into the city limits, thereby providing fire and police protection to the new campus.

In consideration of the benefits accruing to the Parties this **DECLARATION OF GIFT AGREEMENT** is to be observed by the Parties. In furtherance of the stated goals and obligations of the Parties, it is further agreed as follows:

I.
SCHEDULE AND FORM OF GIFT

It is the specific representation of **TEXARKANA** that within ninety (90) calendar days of the acceptance of this gift of land from **TEXARKANA** for a portion of the new campus by The Texas A&M University System, **TEXARKANA** will convey to **TAMUS** all right title and interest in and to the TEXARKANA Gift Tract. The conveyance will be subject only to those restrictions filed for record and any other matters to which such conveyance may be subject pursuant to this Agreement. This gift of real property from **TEXARKANA** consisting of a total of 306.903 acres, more or less, from the Jarrett Janes Headright Survey, Abstract No 302, Bowie County, Texas, will be consummated by the execution of the instrument described in Exhibit "B" attached to this Agreement.

It is acknowledged by **TEXARKANA** that within ninety (90) calendar days of the acceptance of

System Real Estate Office
OFFICIAL DOCUMENT

Attachment: Declaration of Gift Agreement (1102 : Ordinance 2014-055 Third Addendum to agreement between TAMU and City)

the TEXARKANA Gift Tract by The Texas A&M University System and the approval of the Texas Higher Education Coordinating Board, which ever is last, **TAMUS** will execute a Special Warranty Deed conveying all right, title and interest in and to a portion of the TEXARKANA Gift Tract, subject only to those restrictions filed for record, and any other matters to which such conveyance may be subject pursuant to this Agreement. Such conveyance is expressly understood and agreed by **TEXARKANA** to be an exchange of a portion of the TEXARKANA Gift Tract by **TAMUS** for property in the hands of private landowner which will be used as a portion of the new campus. **TAMUS'** exchange of real property will consist of approximately 21 acres from the Jarrett Janes Headright Survey, Abstract No 302, Bowie County, Texas. **TEXARKANA** understands that such exchange is being done to further the intended use of the TEXARKANA Gift Tract which is to support the educational mission and activities of A&M-Texarkana for use by and in the betterment of the citizens of Texarkana, Texas, and the surrounding area.

II.
ADMINISTRATION

TEXARKANA expressly understands **TAMUS** will hold title to the TEXARKANA Gift Tract in the name of the Board of Regents, The Texas A&M University System, for the use and benefit of A&M-Texarkana, and agrees use by **TAMUS** of the TEXARKANA Gift Tract will be under the sole control of and in accordance with the policies and procedures of the Board of Regents, The Texas A&M University System.

The TEXARKANA Gift Tract described in this declaration and the agreements reached herein are accepted on behalf of **TAMUS.**

TAMUS and **TEXARKANA** agree this gift does not cover or include any oil, gas and other minerals in and under the properties (except water, rock, stone, sand and gravel and any mineral content of and materials) provided, however, **TEXARKANA**, its representatives, assigns, lessees, and successors in title will have no right to and will never enter, explore, drill or engage in any operations of any kind upon the surface of the TEXARKANA Gift Tract for discovery, development or recovery of such oil, gas or other minerals.

System Real Estate Office
OFFICIAL DOCUMENT

Prepared by Associate General Counsel
New Campus at TAMU-T
OGC File No 2003-0006383
HDG 10/28/2005

Attachment: Declaration of Gift Agreement (1102 : Ordinance 2014-055 Third Addendum to agreement between TAMU and City)

III.
CONSIDERATION

TAMUS and **TEXARKANA** agree consideration for this gift is the mutual benefits to the Parties which will result in the establishment of a new campus in the area with greater expansion and growth potential. In addition, **TAMUS** expressly acknowledges and agrees the TEXARKANA Gift Tract is intended to be and will be used in support of the educational mission and activities of A&M Texarkana for use by and in the betterment of the citizens of Texarkana, Texas, and the surrounding area.

IV.
PROPERTY CONDITION ANALYSIS

TAMUS at its expense will have the right to conduct feasibility studies, tests, examinations, boundary surveys and any other studies it deems appropriate on the TEXARKANA Gift Tract. In addition, the Parties expressly agree to the following property condition analysis:

A. **TAMUS** may, at its expense and at any time during the period beginning on the Effective Date of this Agreement and continuing to the date of Closing ("Feasibility Period"), conduct fair market appraisals, feasibility studies, tests, and examinations of and on the TEXARKANA Gift Tract it deems appropriate, including but not limited to: (i) studies of subsurface soil conditions and test borings; (ii) an environmental study, which may include, without limitation, an investigation for the presence of any toxic or other hazardous substances in, on, or under, the property; (iii) an historical investigation; and (iv) an archaeological investigation.

B. In addition, **TAMUS** at its expense has the right to conduct wetland studies, water and sewage location availability and any other civil engineering studies, title search, and surveys which, in its sole discretion, it deems necessary. **TAMUS**, its agents and representatives, may enter the TEXARKANA Gift Tract at any reasonable time prior to closing at a point of entry and course of passage approved

System Real Estate Office
OFFICIAL DOCUMENT

Attachment: Declaration of Gift Agreement (1102 : Ordinance 2014-055 Third Addendum to agreement between TAMU and City)

by **TEXARKANA** for the purpose of conducting such tests and examinations as may be reasonably required, subject to not less than two (2) business days prior written notice. **TEXARKANA** shall be entitled to have an agent or representative present for any such tests or examinations. **TAMUS** shall repair and restore any damage to the TEXARKANA Gift Tract which may result from any such tests, inspections or access by **TAMUS** or its agents. **TAMUS** at its expense will be responsible for meeting any wetland mitigation requirements and shall complete those requirements prior to the construction of the thoroughfare provided for hereinabove. The results of such studies and investigations will be referred to as the "TEXARKANA Property Condition Report" and will be the sole property of **TAMUS**, except as hereafter provided. A true, correct and complete copy shall be delivered to **TEXARKANA** promptly after receipt by **TAMUS**.

V.

TITLE COMMITMENTS AND SURVEYS

During the Feasibility Period of this Agreement, **TAMUS** at its expense will obtain a title commitment and have a current Texas Society of Professional Surveyors Category IA, Condition II survey of the TEXARKANA Gift Tract prepared by a Registered Professional Land Surveyor, who is licensed by the State of Texas and approved in writing by **TEXARKANA**, provided that such approval will not be unreasonably withheld, delayed or conditioned. **TAMUS** shall deliver to **TEXARKANA** copies of any such title commitments and survey including any updates thereof, promptly after receipt by **TAMUS**.

A. Title Commitments: A standard form Owner's Title Commitment Policy as promulgated by the State Board of Insurance for the State of Texas (the "Commitment") covering the TEXARKANA Gift Tract and issued by Twin City Title, Texarkana, Texas, ("Title Company") together with copies of all instruments, if any, referred to in the Commitment as exceptions to title, will be forwarded to the Parties.

System Real Estate Office
OFFICIAL DOCUMENT

Prepared by Associate General Counsel
New Campus at TAMU-T
OGC File No. 2003-000383
EDG-10/28/2005

Attachment: Declaration of Gift Agreement (1102 : Ordinance 2014-055 Third Addendum to agreement between TAMU and City)

B. Review of Title Commitments: During the Feasibility Period **TAMUS** and **TEXARKANA** will each review the Commitment, together with copies of all documents constituting exceptions to title, to determine acceptability of the Commitment. If any objectionable exceptions, other than the standard preprinted exceptions, appear in the Commitment the objecting party must notify the other in writing of such objections (the "Title Objections"). Upon expiration of the Feasibility Period, the Parties will be deemed to have accepted all exceptions to title as shown on the Commitments, except for matters to which objections were made, and such exceptions will be included in the term "Permitted Exceptions" as used in this Agreement. Each Party will have thirty (30) calendar days from receipt of such notice in which to attempt to clear the Title Objections specified; however, in no event shall either Party have any obligation to cure or clear any Survey Objections.

C. Uncorrected Title Objections: If either Party claims Title Objections and the other party fails to cause any such Title Objections to be corrected or removed within thirty (30) calendar days following written notice, the objecting Party may: (i) elect to accept the Tract(s) subject to the Title Objections not corrected or removed, in which event, the Title Objections will be deemed waived and become Permitted Exceptions or (ii) terminate this Agreement by giving written notice within ten (10) business days following the earlier of (a) the expiration of the thirty (30) calendar day period in which the other Party may correct or remove the Title Objections or (b) the receipt of written notice that it cannot or will not correct the Title Objections, in which event, the Parties will be released from further obligations under this Agreement. Notwithstanding the foregoing, however, it is hereby provided that either Party will have such additional time, not to exceed thirty (30) additional days, to correct or remove the Title Objections so long as the Party correcting or removing the Title Objections is using diligent efforts to do so. If either Party fails to give written notice of termination within the time required, it will be conclusively deemed that the Party having the right or

System Real Estate Office
OFFICIAL DOCUMENT

Attachment: Declaration of Gift Agreement (1102 : Ordinance 2014-055 Third Addendum to agreement between TAMU and City)

obligation to give such notice has elected to waive the Title Objections not corrected or removed and accepts them as Permitted Exceptions.

VI.
BOUNDARY SURVEYS

TAMUS at its expense will have a boundary survey of the TEXARKANA Gift Tract performed by a Registered Professional Land Surveyor, in accordance with the requirements set forth above.

A. Review of Boundary Survey: The Parties will review the survey of the TEXARKANA Gift Tract during the Feasibility Period. Each Party will notify the other Party in writing of any objections relating to encroachments, discrepancies in area or other defects in the survey (the "Survey Objections"). Upon expiration of the Feasibility Period, each Party will be deemed to have accepted all exceptions to the survey, except for matters which were objected to during the Feasibility Period. Each Party shall have thirty (30) calendar days from receipt of such notice in which to clear the Survey Objections specified.

B. Uncorrected Survey Objections: If either Party claims Survey Objections and the other party fails to cause any such Survey Objections to be corrected or removed within thirty (30) calendar days following written notice, the Party claiming the Survey Objections may: (i) elect to accept the TEXARKANA Gift Tract subject to the Survey Objections not corrected or removed, in which event, the Survey Objections will be deemed waived and become Permitted Exceptions or (ii) terminate this Agreement by giving written notice within ten (10) business days following the earlier of (a) the expiration of the thirty (30) calendar day period in which the other Party may correct or remove the Survey Objections or (b) the receipt of written notice from such Party that it cannot or will not correct the Survey Objections, in which event, the Parties will be released from further obligations under this Agreement. Notwithstanding the foregoing, however, it is

System Real Estate Office
OFFICIAL DOCUMENT

Prepared by Associate General Counsel
New Campus at TAMU-T
OGC File No. 2003-0006383
EDG-10/28/2005

Attachment: Declaration of Gift Agreement (1102 : Ordinance 2014-055 Third Addendum to agreement between TAMU and City)

provided that either Party will have such additional time, not to exceed thirty (30) additional days, to correct or remove the Survey Objections so long as the Party correcting or removing the Survey Objections is using diligent efforts to do so. If either Party fails to give written notice of termination within the time required, it will be conclusively deemed that the Party having the right or obligation to give such notice has elected to waive the Survey Objections not corrected or removed and accepts them as Permitted Exceptions.

VII.
CLOSING

Closing will be held in the offices of the Title Company on a date mutually agreeable to the Parties, subject only to the conditions specified in this Agreement. Notwithstanding the foregoing, the Closing may be extended by written agreement of the Parties as may reasonably be required by either Party in order to correct or remove any Title Objections or Survey Objections for the time period permitted under this Agreement. At Closing, **TEXARKANA** will deliver its Special Warranty Deed conveying fee title to the TEXARKANA Gift Tract, free and clear of any and all encumbrances, save and except those contained in the conveyance deed, and subject also to the Permitted Exceptions. At Closing, **TAMUS** will receive, at **TAMUS'** sole expense, a standard form Owner's Insurance Policy as promulgated by the State Board of Insurance for the State of Texas (the "Policy") issued by the Title Company, insuring fee title of the TEXARKANA Gift Tract to **TAMUS** in the amount of the appraised value for the tract and containing no exceptions or conditions other than the Permitted Exceptions. **TEXARKANA** and **TAMUS** will execute such other instruments as are customarily executed in the State of Texas in connection with the conveyance of real property, including all reasonably required closing statements, releases, affidavits, evidences of authority to execute documents, and other instruments, which may be reasonably required by the Title Company.

Real property taxes, insurance, utility charges and rents, if any, will be prorated to the date of Closing. Taxes, if any, for all prior years will be paid by the then owner. If Closing occurs before the tax rate is fixed for the then current year, the apportionment of taxes will be based on

System Real Estate Office
OFFICIAL DOCUMENT

Attachment: Declaration of Gift Agreement (1102 : Ordinance 2014-055 Third Addendum to agreement between TAMU and City)

the tax rate for the preceding year applied to the latest assessed valuation. All installments that have matured prior to closing on any special taxes or assessments, either general or special will be paid in full by the granting Party and any installments that are scheduled in the special assessment to mature after closing will be assumed by the Party receiving title. All federal, state and local sales or other taxes, if any, relating to the sale of the Tracts shall be paid by the respective Parties on the date of closing. Both Parties agree to execute any tax returns as required in connection with any such taxes.

TAMUS will take possession of the TEXARKANA Gift Tract on the date of Closing, free of any liens and leasehold interests, other than Permitted Exceptions, as of the date of Closing, except as may be otherwise expressly provided in this Agreement.

TAMUS AGREES THAT IT WILL INSPECT AND ASSESS THE TEXARKANA GIFT TRACT PROPERTY PURSUANT TO THIS AGREEMENT AND THAT IT WILL RELY SOLELY UPON EXAMINATIONS AND INVESTIGATIONS IN ELECTING WHETHER OR NOT TO ACCEPT THE PROPERTY. NOTWITHSTANDING ANYTHING CONTAINED IN THIS AGREEMENT TO THE CONTRARY, IT IS EXPRESSLY UNDERSTOOD AND AGREED TAMUS IS ACQUIRING SUCH PROPERTY "AS IS" AND "WHERE IS," AND WITH ALL FAULTS AND DEFECTS, LATENT OR OTHERWISE, AND TEXARKANA IS MAKING NO REPRESENTATIONS NOR WARRANTIES, EITHER EXPRESS OR IMPLIED BY THE OPERATION OF LAW OR OTHERWISE, WITH RESPECT TO QUALITY, PHYSICAL CONDITION OR VALUE OF THE PROPERTY, THE PRESENCE OR ABSENCE OF HAZARDOUS SUBSTANCES, IN, ON, UNDER OR ABOUT THE PROPERTY, THE COMPLIANCE OF THE PROPERTY WITH APPLICABLE LAW, OR THE INCOME OR EXPENSES FROM OR OF THE PROPERTY. WITHOUT LIMITING THE FOREGOING, IT IS UNDERSTOOD AND AGREED TEXARKANA MAKES NO WARRANTY OF HABITABILITY, SUITABILITY, MERCHANTIBILITY, OR FITNESS FOR A PARTICULAR PURPOSE. THE PROVISIONS OF THIS PARAGRAPH SURVIVE CLOSING.

System Real Estate Office
OFFICIAL DOCUMENT

Prepared by Associate General Counsel
New Campus at TAMU-T
OGC File No. 2003-00062E3
EDG-10/28/2005

Attachment: Declaration of Gift Agreement (1102 : Ordinance 2014-055 Third Addendum to agreement between TAMU and City)

Attachment: Declaration of Gift Agreement (1102 : Ordinance 2014-055 Third Addendum to agreement between TAMU and City)

VIII.

DISCLOSURES: NO REPRESENTATIONS

As part of the feasibility analysis of the TEXARKANA Gift Tract, each Party agrees to disclose to the other all material written agreements, commitments and obligations, if any, with third parties concerning the TEXARKANA Gift Tract or any known contingent liabilities associated with the TEXARKANA Gift Tract which would bind a Party or materially affect the fair market value or marketability of the tract, other than any such documents of record which should be disclosed by an accurate title search. Copies of all such documents, if any, will be delivered by each Party to the other no later than ten (10) business days after the Effective Date of this Agreement. In the event the transaction contemplated by this Agreement is not consummated for any reason, all copies of any such documents will be returned.

Each Party acknowledges that neither the other Party nor any real estate broker, agent, officer, employee or other representative of the other Party or its affiliates has made any representations whatsoever regarding the subject matter of this transaction, including, without limiting the generality of the foregoing, representations as to the physical nature or condition of the TEXARKANA Gift Tract (including, without limitation, any buildings, improvements or any environmental conditions, except those matters revealed in this Agreement) or any other matter or thing affecting or related to the TEXARKANA Gift Tract.

IX.

AUTHORITY

Each Party represents to the other it has the full right, power, and authority to enter into this Agreement and to consummate the transaction contemplated in this Agreement.

X.

BROKERAGE COMMISSIONS

TEXARKANA and **TAMUS** agree there have been no dealings with any agents or brokers, in

System Real Estate Office
OFFICIAL DOCUMENT

Prepared by Associate General Counsel
New Campus at TAMU-T
OGC File No. 2003-0000383
EDG-10/28/2005

connection with the TEXARKANA Gift Tract and no brokerage commissions or finders fees will be paid as a result of this transaction.

XI.

ASSIGNMENT OF CONTRACT

This Agreement may not be assigned by **TAMUS** or **TEXARKANA** without the prior written approval of the other Party.

XII.

SURVIVAL OF COVENANTS

All representations, warranties, covenants, and agreements of the Parties, as well as any rights and benefits of the Parties, pertaining to a period of time following the closing survive closing and will not be merged.

XIII.

NOTICES

All notices to either Party by the other will be signed by the designated representative of such Party, or their successors in interest or office, and delivered personally or sent by U.S. certified or registered mail, return receipt requested, postage prepaid, addressed as follows:

"TAMUS":

Associate Vice Chancellor for Real Estate
System Real Estate Office
The Texas A&M University System
A&M System Building, Suite 1151
200 Technology Way
College Station, TX 77845-3424

"TEXARKANA"

George T. Shackelford
City Manager
City of Texarkana
220 Texas Blvd. 75501
P. O. Box 1967 75504
Texarkana, Texas

Notice will be deemed given on the date it is hand delivered or deposited in the U.S. mail.

System Real Estate Office
OFFICIAL DOCUMENT

Attachment: Declaration of Gift Agreement (1102 : Ordinance 2014-055 Third Addendum to agreement between TAMU and City)

XIV.
TEXAS LAW TO APPLY

This Agreement is construed under and in accordance with the laws of the State of Texas, and is performable in Bowie County, Texas; however, by statute, mandatory venue for all legal proceedings against **TAMUS** is to be in the county in which the principal office of the governing officer is located. At execution of this Agreement such county is Brazos County, Texas.

XV.
GRAMMATICAL INTERPRETATION

Whenever the singular number is used, it includes the plural, and the masculine gender includes the feminine and neuter gender.

XVI.
HEADINGS

Headings are for reference and will not be construed to limit or alter the meaning of the provisions of this Agreement.

XVII.
ENTIRE AGREEMENT

This Agreement constitutes the entire commitment of **TAMUS** and **TEXARKANA** and will not be explained, modified, or contradicted by any prior or contemporaneous negotiations, representations, or agreements, either written or oral. This Agreement may be amended only by a subsequent written instrument executed by **TAMUS** and **TEXARKANA**.

XVIII.
PARTIES BOUND

This Agreement is binding upon and inures to the benefit of the Parties to this Agreement and their respective, legal representatives, successors in interest or office, and assigns (but this section does

System Real Estate Office
OFFICIAL DOCUMENT

Attachment: Declaration of Gift Agreement (1102 : Ordinance 2014-055 Third Addendum to agreement between TAMU and City)

not constitute permission for an assignment).

XIX.
SAVING CLAUSE

Should any clause in this Agreement be found invalid by a court of law, the remainder of this Agreement will not be affected and all other provisions in this Agreement remain valid and enforceable to the fullest extent permitted by law.

XX.
TIME OF ESSENCE

Time is of the essence in this Agreement.

XXI.
EFFECTIVE DATE

The Effective Date of this Agreement is the date of the last party to execute this Agreement.

EXECUTED this the 7th day of November, 2005, by **TAMUS**.

"TAMUS"
BOARD OF REGENTS
THE TEXAS A&M UNIVERSITY SYSTEM
For the benefit of Texas A&M University - Texarkana

By: James G. Hooton
JAMES G. HOOTON
Executive Vice Chancellor for Finance

System Real Estate Office
OFFICIAL DOCUMENT

Prepared by Associate General Counse
New Campus at TAMU-T
OGC File No. 2003-0000383
EDG-10/28/2005

Attachment: Declaration of Gift Agreement (1102 : Ordinance 2014-055 Third Addendum to agreement between TAMU and City)

RECOMMEND APPROVAL:

STEPHEN R. HENSLEY
President
Texas A&M University - Texarkana

DAN K. BUCHLY
Associate Vice Chancellor for Real Estate
System Real Estate Office
The Texas A&M University System

APPROVED AS TO FORM:

EDDIE D. GOSE, J.D.
Associate General Counsel
Office of General Counsel
The Texas A&M University System

EXECUTED this the 3rd day of November, 2005, by **TEXARKANA.**

"TEXARKANA"
CITY OF TEXARKANA, TEXAS

By: _____
GEORGE T. SHACKELFORD
City Manager

System Real Estate Office
OFFICIAL DOCUMENT

Prepared by Associate General Counsel
New Campus at TAMU-T
OGC File No. 2003-0006383
EDG-10/28/2005

Attachment: Declaration of Gift Agreement (1102 : Ordinance 2014-055 Third Addendum to agreement between TAMU and City)

APPROVED AS TO FORM:

THOMAS H. ARNOLD
City Attorney

Exhibit "A" – Field Note Description for the TEXARKANA Gift Tract
Exhibit "B" – Special Warranty Deed from **TEXARKANA** to **TAMUS**
Exhibit "C" – Phasing of Road Construction
Exhibit "D" – Existing Easements to be Retained at Closing
Exhibit "E" – Future Easements to be Retained at Closing

System Real Estate Office
OFFICIAL DOCUMENT

Prepared by Associate General Counsel
New Campus at TAMU-T
OGC File No. 2003-0006383
EDG-10/28/2005

Attachment: Declaration of Gift Agreement (1102 : Ordinance 2014-055 Third Addendum to agreement between TAMU and City)

EXHIBIT "A"

306.903 ACRE TRACT

Jarret Janes HRS, Abstract No. 302
City of Texarkana, Bowie County, Texas

DESCRIPTION, of a 306.903 acre tract of land situated in the Jarrett Janes HRS., Abstract No. 302 and in the J.W. Fort HRS., Abstract No. 218, Bowie County, Texas; said tract being part of those tracts of land described by that Deed, Conveyance and Assignment to the City of Texarkana, Texas recorded in Volume 250, Page 447 of the Deed Records of Bowie County, Texas; said 306.903 acre tract being more particularly described as follows:

BEGINNING, at a 1/2-inch iron rod found at the northwest corner of the terminus of Deerwood Street (a 60-foot wide right-of-way); said point being the southwest corner of Lot 8, Block 2 Oak Forest Subdivision No. 2, an addition to the City of Texarkana according to the plat thereof recorded in Volume A, Page 428 of the Map Records of Bowie County, Texas;

THENCE, South 02 degrees, 23 minutes, 15 seconds East, along the west line of said Block 3, a distance of 1859.96 feet to a point for corner on the north line of Lot 4, Block 7 of said Oak Forest Subdivision
No. 2;

THENCE, South 88 degrees, 01 minutes, 45 seconds West, along the north line of said Block 7, a distance of 1218.55 feet to a 1/2-inch iron found for corner on the east line of Lot 16, Block 1 of North Fork, an addition to the City of Texarkana according to the plat thereof recorded in Volume 3504, Page 250 of the Map Records of Bowie County, Texas; said point being the northwest corner of Lot 10 of said Block 7;

THENCE, North 02 degrees, 59 minutes, 49 seconds West, along the east line of said Block 1, a distance of 551.13 feet to a point for corner; said point being the northern most corner of Lot 13 and the eastern most corner of Lot 12 of said Block 1; from said point a nail found bears North 75 degrees, 15 minutes, West, a distance of 4.2 feet;

THENCE, South 88 degrees, 01 minutes, 48 seconds West, along the north line of said Block 1, passing at a distance of 1746.98 feet a 1/2-inch iron rod with "Texas JHG 1715" cap found, said point being the northwest corner of Lot 5, Block I and the northeast corner of a tract of land described in a Deed to John J. Wittu and Esther Rosalee Wittu recorded in Volume 448, Page 341 of the Deed Records of Bowie County, Texas, continuing along the north line of said tract and the north line of a tract of land described in a deed to John East O'Neal & Martha W. O'Neal recorded in Instrument No. 5306 of the Deed Records of Bowie County, Texas, continuing for a total distance of 2378.27 feet to a point for corner; said point being the north line of a tract of land described in a deed to Dr. John East O'Neal and Martha W. O'Neal recorded in Volume 445 Page 502 of the Deed Records of Bowie County, Texas;

System Real Estate Office
OFFICIAL DOCUMENT

Prepared by Associate General Counsel
New Campus at TAMU-T
OGC File No. 2003-0006383
EDG-10/28/2005

Attachment: Declaration of Gift Agreement (1102 : Ordinance 2014-055 Third Addendum to agreement between TAMU and City)

THENCE, South 88 degrees, 27 minutes, 23 seconds West, along the south line of said City of Texarkana tract, a distance of 1625.77 feet to a 1/2-inch iron pipe found for corner; said point being the northeast corner of Lot 1, Block 1 Wrightridge, an addition to the City of Texarkana according to the plat thereof recorded in Volume A, Page 120 of the Map Records of Bowie County, Texas; said point also being the southern most corner of Lot 2, Block 1, Bringle Lake Subdivision, an addition to the City of Texarkana according to the plat thereof recorded in Volume 4294, Page 289 of the Deed Records of Bowie County, Texas;

THENCE, North 32 degrees, 32 minutes, 10 seconds East, along the southeast line of said Lot 2, Block 1, a distance of 2890.95 feet to a point for corner; said point being the eastern most corner of said Lot 2, Block 1; said point also being an interior corner of said City of Texarkana tract;

THENCE, North 31 degrees, 59 minutes, 38 seconds East, a distance of 464.95 feet to a point for corner;

THENCE, North 87 degrees, 42 minutes, 47 seconds East, a distance of 120.71 feet to a point for corner;

THENCE, North 00 degrees, 58 minutes, 49 seconds West, a distance of 183.27 feet to a point for corner;

THENCE, North 31 degrees, 59 minutes, 38 seconds West, a distance of 292.08 feet to a point for corner;

THENCE, North 34 degrees, 27 minutes, 58 seconds West, a distance of 351.25 feet to a point for corner;

THENCE, South 64 degrees, 45 minutes, 12 seconds West, a distance of 145.70 feet to a point for corner;

THENCE, North 08 degrees, 45 minutes, 44 seconds West, a distance of 397.51 feet to a point for corner;

THENCE, North 25 degrees, 46 minutes, 05 seconds West, a distance of 190.23 feet Co a point for corner;

THENCE, North 29 degrees, 30 minutes, 25 seconds East, a distance of 80.38 feet to a point for corner;

THENCE, North 83 degrees, 22 minutes, 22 seconds East, a distance of 127.30 feet to a point for corner;

THENCE, North 40 degrees, 45 minutes, 32 seconds East, a distance of 189.30 feet to a point for corner;

System Real Estate Office
OFFICIAL DOCUMENT

Prepared by Associate General Counsel
New Campus at TAMU-T
OGC File No. 2003-0006053
EDG-10/28/2005

Attachment: Declaration of Gift Agreement (1102 : Ordinance 2014-055 Third Addendum to agreement between TAMU and City)

THENCE, North 40 degrees, 16 minutes, 11 seconds West, a distance of 141.53 feet to a point for corner;

THENCE, South 85 degrees, 53 minutes, 11 seconds West, a distance of 284.47 feet to a point for corner;

THENCE, North 46 degrees, 13 minutes, 08 seconds West, a distance of 535.60 feet to a point for corner;

THENCE, North 24 degrees, 27 minutes, 07 seconds West, a distance of 61.71 feet to a point for corner;

THENCE, North 57 degrees, 58 minutes, 03 seconds West, a distance of 317.97 feet to a point for corner;

THENCE, North 49 degrees, 03 minutes, 27 seconds West, a distance of 102.76 feet to a point for corner;

THENCE, North 26 degrees, 50 minutes, 38 seconds East, a distance of 59.04 feet to a point for corner on a northeasterly line of said City of Texarkana tract and the southwest line of a tract of land described in a deed to Hilda B. Shilling recorded in Volume 3216, Page 136 of the Deed Records of Bowie County, Texas;

THENCE, South 63 degrees, 09 minutes, 22 seconds East, along the northeasterly line of said City of Texarkana tract, a distance of 2100.00 feet to a point for corner; said point being an interior corner of said Shilling tract;

THENCE, South 33 degrees, 41 minutes, 56 seconds West, along the northwest line of said Shilling tract and a southeast line of said City of Texarkana tract, distance of 1006.00 feet to a point for corner at the base of a 7-inch oak tree;

THENCE, South 27 degrees, 28 minutes, 31 seconds East, along a northeast line of said City of Texarkana tract, and along or near a wire fence, a distance of 604.19 feet to a wood fence post for corner; said point being in the south line of said Shilling tract;

THENCE, North 87 degrees, 26 minutes, 43 seconds East, along the south line of said Shilling tract, passing at a distance of 890.65 feet the southwest corner of Lot 30 Block 1 Shilling South Second Addition, an addition to the City of Texarkana according to the plat thereof recorded in Volume 4247, Page 80 of the Map Records of Bowie County, Texas, continuing along the south line, passing at a distance of 1940.65 feet the southeast corner of said Block 1 and the southwest corner of Block 1, Shilling South, an addition to the City of Texarkana according to the plat thereof recorded in Volume 3589, Page 103 of the Map Records of Bowie County, Texas, continuing along the south line of said Block 1, Shilling South for a total distance of 2739.35 feet to a point for corner on the south line of Lot 14, Block 1 Shilling South; said point being the northwest corner of Lot 2, Block 2 of said Oak Forest Subdivision No. 2; from said point a 2-inch iron pipe found bears South 03 degrees, 53 minutes, West, a distance of 1 .5 feet;

System Real Estate Office
OFFICIAL DOCUMENT

Attachment: Declaration of Gift Agreement (1102 : Ordinance 2014-055 Third Addendum to agreement between TAMU and City)

THENCE, South 02 degrees, 23 minutes, 15 seconds East, along the west line of said Block 2, a distance of 1416.64 feet to the POINT OF BEGINNING;

CONTAINING, 13,368,705 square feet or 306.903 acres of land, more or less.

System Real Estate Office
OFFICIAL DOCUMENT

Prepared by Associate General Counsel
New Campus at TAMU-T
OGC File No. 2003-0806383
EDG-10/26/2005

Attachment: Declaration of Gift Agreement (1102 : Ordinance 2014-055 Third Addendum to agreement between TAMU and City)

EXHIBIT "B"

GIFT DEED

STATE OF TEXAS §
§
COUNTY OF BOWIE §

THE CITY OF TEXARKANA, TEXAS, (GRANTOR, but hereafter "TEXARKANA"), in support of, furtherance, and encouragement of Texas A&M University-Texarkana gives, grants, and confirms unto the Board of Regents, THE TEXAS A&M UNIVERSITY SYSTEM (GRANTEE, but hereafter "TAMUS"), for the use and benefit of Texas A&M University-Texarkana, the following described real property in Bowie County, Texas, (hereafter the "Gift Property") and being described as follows:

See attached Exhibit "A" for legal description

This gift is made and accepted subject to all valid and existing easements, restrictions, rights-of-way, conditions, exceptions, reservations and conveyances of record.

Further, this gift is made by TEXARKANA. and accepted by TAMUS subject to the following reservations and covenants:

TEXARKANA reserves such existing and proposed easements and rights-of-way as depicted in Exhibits "B" and "C" to this Gift Deed, which are those easements depicted respectively in Exhibit "D", styled *Existing Easements to be Retained at Closing*, and those easements depicted in Exhibit "E", styled *Future Easements to be Retained at Closing*, attached to that certain *Declaration of Gift Agreement between the City of Texarkana and The Texas A&M University System for the Use and Benefit of Texas A&M University-Texarkana*. If TEXARKANA determines that it no longer has need of one or more of those easements, TEXARKANA will promptly notify TAMUS of its intent to

System Real Estate Office
OFFICIAL DOCUMENT

Prepared by Associate General Counsel
New Campus at TAMU-T
OGC File No. 2003-00[illegible]
EDG-10/21/2005

Attachment: Declaration of Gift Agreement (1102 : Ordinance 2014-055 Third Addendum to agreement between TAMU and City)

abandon such easement(s) and will release, by an appropriate written release, the easement(s) to **TAMUS** without any action being required by or on behalf of **TAMUS**. **TEXARKANA** further agrees that should it become necessary to excavate the utility easement described as Utility Easement 2 in Exhibit "C" attached hereto for the purpose of maintenance or repair **TEXARKANA** will repair the surface and damage to any improvement on the surface which results from those maintenance or repair operations; provided however, for the other easements described in Exhibits "B" and "C" attached hereto, should it become necessary to excavate any of those easements for the purpose of maintenance or repair **TEXARKANA** will not be responsible for damage to or repair of any improvements on the surface caused during those maintenance or repair operations.

This gift does not cover or include any oil, gas and other minerals in and under the Gift Property (except water, rock, stone, sand and gravel and any mineral content of such materials); provided, however, **TEXARKANA**, its representatives, assigns, lessees, and successors in title will have no right to and will never enter, explore, drill or engage in any operations of any kind upon the surface of the Gift Property for discovery, development or recovery of such oil, gas or other minerals.

TEXARKANA and **TAMUS** agree it is the intent of **TAMUS** to use the Gift Property to support the educational mission and activities of Texas A&M University-Texarkana. **TEXARKANA** acknowledges appropriation of funds for construction of improvements, actual construction, or intermittent conducting of research or educational activities on the Gift Property, or any portion thereof, constitutes compliance by **TAMUS** with all conditions of conveyance for the Gift Property. **TEXARKANA** expressly acknowledges this conveyance eliminates any rights in **TEXARKANA** to demand the adjustment of any property lines or relocation of **TAMUS** property ownership.

TO HAVE AND TO HOLD the above described Gift Property, together with all and singular the rights and appurtenances therein and otherwise belonging to **TAMUS**, its assigns and successors in interest forever, and **TEXARKANA** binds itself, its successors, and assigns to warrant and forever defend all and singular the Gift Property to **TAMUS** and its assigns and successors interest, against every person whomsoever lawfully claiming or to claim the property or any part

System Real Estate Office
OFFICIAL DOCUMENT

Attachment: Declaration of Gift Agreement (1102 : Ordinance 2014-055 Third Addendum to agreement between TAMU and City)

thereof, except as to the reservations from and exceptions to conveyance and warranty, when the claim is by, through, or under TEXARKANA but not otherwise.

IN WITNESS WHEREOF, TEXARKANA has executed this instrument on the _____ day of _____, 2005.

"TEXARKANA"
THE CITY OF TEXARKANA

For Exhibit Purposes Only
DO NOT SIGN

_____
GEORGE T. SHACKELFORD
City Manager

IN WITNESS WHEREOF, TAMUS has executed this instrument on the _____ day of _____, 2005.

ACCEPTED:

"TAMUS"
THE BOARD OF REGENTS
THE TEXAS A&M UNIVERSITY SYSTEM
for the benefit of Texas A&M University-Texarkana

For Exhibit Purposes Only
DO NOT SIGN

_____
JAMES G. HOOTON
Executive Vice Chancellor for Finance

RECOMMEND APPROVAL:

For Exhibit Purposes Only
DO NOT SIGN

_____
DAN BUTLER
Associate Vice Chancellor for Real Estate
System Real Estate Office
The Texas A&M University System

System Real Estate Office
OFFICIAL DOCUMENT

Prepared by Associate General Counsel
New Campus at TAMU-T
OGC File No. 2003-0006383
EDG-10-28-2005

Attachment: Declaration of Gift Agreement (1102 : Ordinance 2014-055 Third Addendum to agreement between TAMU and City)

APPROVED AS TO FORM:

For Exhibit Purposes Only
DO NOT SIGN

EDDIE D. GOSE, J.D.
Associate General Counsel
Office of General Counsel
The Texas A&M University System

ACKNOWLEDGEMENTS

THE STATE OF TEXAS §
§
COUNTY OF BOWIE §

BEFORE ME, the undersigned authority, a Notary Public in and for the State of Texas, on this day personally appeared **GEORGE T. SHACKELFORD**, City Manager for the City of Texarkana, known to me to be the persons whose names are subscribed to the foregoing instrument and acknowledged to me that he executed the same for the purposes and consideration therein expressed, and in the capacity therein stated.

GIVEN UNDER MY HAND AND SEAL OF OFFICE this _____ day of _____, A. D. 2005.

For Exhibit Purposes Only
DO NOT SIGN

Notary Public, State of Texas
My Commission Expires: _____

System Real Estate Office
OFFICIAL DOCUMENT

Prepared by Associate General Counsel
New Campus at TAMU-T
OGC File No. 2005-000489
EDG-10/28/2005

Attachment: Declaration of Gift Agreement (1102 : Ordinance 2014-055 Third Addendum to agreement between TAMU and City)

THE STATE OF TEXAS §
§
COUNTY OF BRAZOS §

BEFORE ME, the undersigned authority, a Notary Public in and for the State of Texas, on this day personally appeared **JAMES G. HOOTON**, Executive Vice Chancellor for Finance of The Texas A&M University System, known to me to be the person whose name is subscribed to the foregoing instrument and acknowledged to me that he executed it as the act and deed of the Board of Regents of The Texas A&M University System for the purposes and consideration therein expressed, and in the capacity therein stated.

GIVEN UNDER MY HAND AND SEAL OF OFFICE this _____ day of _____, A. D. 2005.

For Exhibit Purposes Only
DO NOT SIGN

_____
Notary Public, State of Texas
My Commission Expires: _____

GRANTEE'S ADDRESS:

System Real Estate Office
The Texas A&M University System
A&M System Building, Suite 1151
200 Technology Way
College Station, TX 77845-3424

System Real Estate Office

Prepared by Associate General Counsel
New Campus at TAMU-T
OGC File No. 2002-000382
EDG 10/28/2002

Attachment: Declaration of Gift Agreement (1102 : Ordinance 2014-055 Third Addendum to agreement between TAMU and City)

EXHIBIT "C"

PHASING FOR ROAD CONSTRUCTION

System Real Estate
OFFICIAL

Prepared by Associate General Counsel
New Campus at TAMU-T
OGC File No. 2003-0096383
EDG-10/28/2005

Attachment: Declaration of Gift Agreement (1102 : Ordinance 2014-055 Third Addendum to agreement between TAMU and City)

EXHIBIT "D"

EXISTING EASEMENTS TO BE RETAINED AT CLOSING

EXHIBIT "A"

35' x 35' LIFT STATION EASEMENT
J.W. Fort HRS., Abstract No. 218
City of Texarkana, Bowie County, Texas

DESCRIPTION, of a 1,225 square foot tract of land situated in the J.W. Fort HRS., Abstract No. 218, Bowie County, Texas; said tract being part of those tracts of land described by that Deed, Conveyance and Assignment to the City of Texarkana, Texas recorded in Volume 250, Page 447 of the Deed Records of Bowie County, Texas; said 1,225 square foot tract being more particularly described as follows:

BEGINNING, at a point for corner; said point being North 07 degrees, 33 minutes, 12 seconds West, a distance of 166.29 feet from the northeast corner of Lot 13, Block 1 North Fork, an addition to the City of Texarkana, Texas, according to the plat recorded in Volume 3504, Page 250 of the Map Records of Bowie County, Texas;

THENCE, North 23 degrees, 42 minutes, 22 seconds West, a distance of 35.00 feet to a point for corner;

THENCE, North 66 degrees, 17 minutes, 38 seconds East, a distance of 35.00 feet to a point for corner;

THENCE, South 23 degrees, 42 minutes, 22 seconds East, a distance of 35.00 feet to a point for corner;

THENCE, South 66 degrees, 17 minutes, 38 seconds West, a distance of 35.00 feet to the POINT OF BEGINNING;

CONTAINING, 1,225 square feet of land, more or less.

(A survey plat of even survey date herewith accompanies this description.)

The undersigned, Registered Professional Land Surveyor, hereby certifies that the foregoing description accurately sets out the metes and bounds of the easement tract described.

1/17/05

James A. Koch, Jr. Date
Registered Professional Land Surveyor No. 4688
Pacheco Koch Consulting Engineers, Inc.
8350 N. Central Expwy., #1000, Dallas TX 75206
(972) 235-3031

STATE OF TEXAS REGISTERED JAMES A. KOCH, JR. 4688 PROFESSIONAL LAND SURVEYOR

35' X 35'ESMT.doc
2531-04.173

SHEET 1 OF 2

System Real Estate Office
OFFICIAL DOCUMENT

Prepared by Associate General Counse
New Campus at TAMU-T
OGC File No 2003-000.382
EDG-10/26/2005

Attachment: Declaration of Gift Agreement (1102 : Ordinance 2014-055 Third Addendum to agreement between TAMU and City)

LINE TABLE		
LINE	BEARING	LENGTH
L1	N 23°42'22" W	35.00'
L2	N 66°17'38" E	35.00'
L3	S 23°42'22" E	35.00'
L4	S 66°17'38" W	35.00'

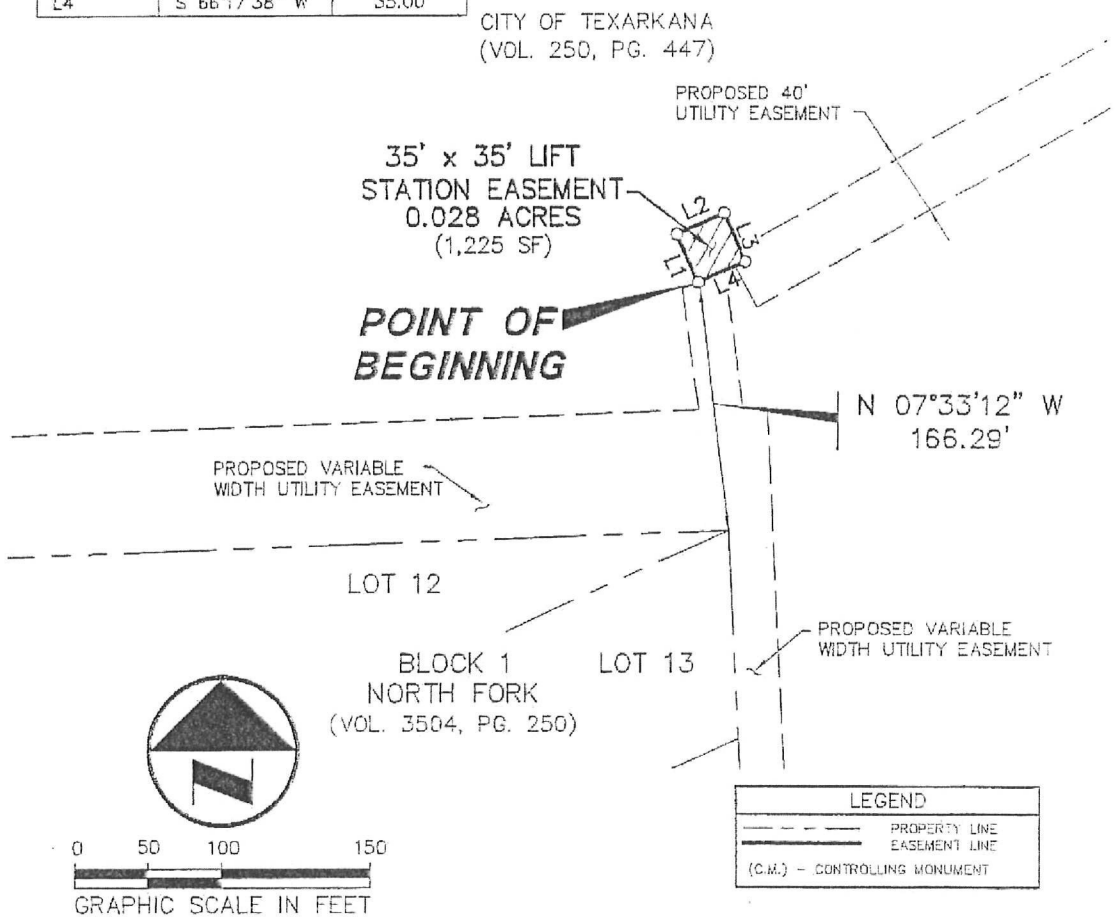

The undersigned, Registered Professional Land Surveyor, hereby certifies that this plat of survey accurately sets out the metes and bounds of the easement tract described.

1/17/05

James A. Koch, Jr. Date
Registered Professional Land Surveyor

STATE OF TEXAS REGISTERED JAMES A. KOCH JR. 4688 PROFESSIONAL LAND SURVEYOR

NOTES:

1. A legal description of even survey date herewith accompanies this plat of survey.

2. Bearing system for this survey is based on NAD 83 Texas State Plane Coordinate System, North Central Zone.

Pacheco Koch Consulting Engineers

8350 N CENTRAL EXPWY SUITE 1000 DALLAS, TEXAS 75206 972.235.3031

DRAWN BY	CHECKED BY	SCALE	DATE	JOB NUMBER
CRG	MLL	1"=100'	OCTOBER 2004	2531-04.173

35' x 35' LIFT STATION EASEMENT

LOCATED IN THE CITY OF TEXARKANA, TEXAS AND BEING OUT OF THE J.W. FORT HRS. SURVEY, ABSTRACT NO. 218 AND BOWIE COUNTY, TEXAS

SHEET 2 OF 2

DWG FILE: 2531-04-173E6.DWG

H:\DWG 25\2531 04.173\DWG\2531-04-173E6.DWG

System Real Estate Office
OFFICIAL DOCUMENT

Prepared by Associate General Counsel
New Campus at TAMU-T
OGC File No. 2055.0006382
EDC-10/28/2005

EXHIBIT "A"

100' UTILITY EASEMENT
J.W. Fort HRS., Abstract No. 218
City of Texarkana, Bowie County, Texas

DESCRIPTION, of a 7.521 acre tract of land situated in the J.W. Fort HRS., Abstract No. 218, Bowie County, Texas; said tract being part of those tracts of land described by that Deed, Conveyance and Assignment to the City of Texarkana, Texas recorded in Volume 250, Page 447 of the Deed Records of Bowie County, Texas; said 7.521 acre tract being more particularly described as follows:

BEGINNING, at a 1/2-inch iron rod found at the northwest corner of the terminus of Deerwood Street (a 60-foot wide right-of-way); said point being the southwest corner of Lot 8, Block 2 Oak Forest Subdivision No. 2, an addition to the City of Texarkana according to the plat thereof recorded in Volume A, Page 428 of the Map Records of Bowie County, Texas;

THENCE, South 02 degrees, 23 minutes, 15 seconds East, along the west line of said Block 3, a distance of 1,859.96 feet to a point for corner on the north line of Lot 4, Block 7 of said Oak Forest Subdivision No. 2;

THENCE, South 88 degrees, 01 minutes, 45 seconds West, along the north line of said Block 7, a distance of 100.00 feet to a point for corner in the north line of said Block 7;

THENCE, North 02 degrees, 23 minutes, 15 seconds West, departing the north line of said Block 7, a distance of 3,275.58 feet to a point for corner on the south line of Lot 14, Block 1 Shilling South, an addition to the City of Texarkana, Texas recorded in Volume 3589, Page 103 of the Deed Records of Bowie County, Texas;

THENCE, North 87 degrees, 26 minutes, 43 seconds East, a distance of 100.00 feet to a point for corner; said point being the northwest corner of Lot 2, Block 2 of said Oak Forest Subdivision No. 2;

SHEET 1 OF 5

System Real Estate Office
OFFICIAL DOCUMENT

Prepared by Associate General Counsel
New Campus at TAMU-T
OGC File No. 2000-060x322
EDG 10/28/2005

Attachment: Declaration of Gift Agreement (1102 : Ordinance 2014-055 Third Addendum to agreement between TAMU and City)

THENCE, South 02 degrees, 23 minutes, 15 seconds East, along the west line of said Block 2, a distance of 1416.64 feet to the POINT OF BEGINNING;

CONTAINING, 327,609 square feet or 7.521 acres of land, more or less.

(A survey plat of even survey date herewith accompanies this description.)

The undersigned, Registered Professional Land Surveyor, hereby certifies that the foregoing description accurately sets out the metes and bounds of the easement tract described.

1/17/15

James A. Koch, Jr. Date
Registered Professional Land Surveyor No. 4688
Pacheco Koch Consulting Engineers, Inc.
8350 N. Central Expwy., #1000, Dallas TX 75206
(972) 235-3031

STATE OF TEXAS REGISTERED JAMES A. KOCH, JR. 4688 PROFESSIONAL LAND SURVEYOR

100' UTIL ESMT.doc
2531-04.173

SHEET 2 OF 5

System Real Estate Office
OFFICIAL DOCUMENT

Prepared by Associate General Counsel
New Campus at TAMU-T
OGC File No. 2005-000383
EDG-10/28/2005

Attachment: Declaration of Gift Agreement (1102 : Ordinance 2014-055 Third Addendum to agreement between TAMU and City)

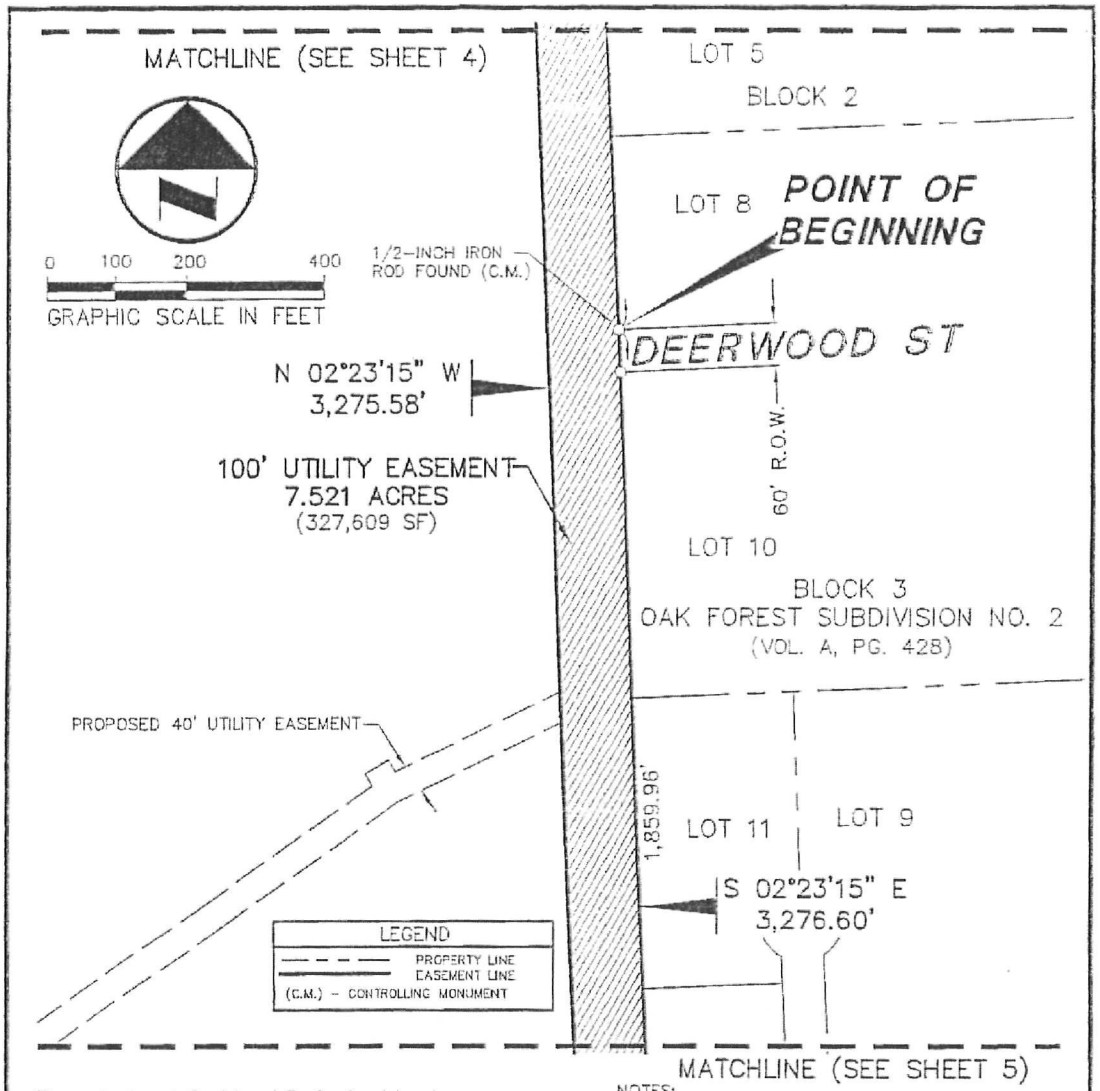

The undersigned, Registered Professional Land Surveyor, hereby certifies that this plat of survey accurately sets out the metes and bounds of the easement tract described.

1/17/05

James A. Koch, Jr. Date
Registered Professional Land Surveyor

STATE OF TEXAS REGISTERED JAMES A. KOCH JR. 4688 PROFESSIONAL LAND SURVEYOR

NOTES:

A legal description of even survey date herewith accompanies this plat of survey.

Bearing system for this survey is based on NAD 83 Texas State Plane Coordinate System, North Central Zone.

Pacheco Koch Consulting Engineers

8350 N CENTRAL EXPWY SUITE 1000 DALLAS, TEXAS 75206 972.235.3031

DRAWN BY	CHECKED BY	SCALE	DATE	JOB NUMBER
CRG	MLL	1"=200'	OCTOBER 2004	2531-04.173

100' UTILITY EASEMENT
7.521 ACRES

LOCATED IN THE CITY OF TEXARKANA, TEXAS AND BEING OUT OF THE J.W. FORT HRS. SURVEY, ABSTRACT NO. 218 AND BOWIE COUNTY, TEXAS

SHEET 3 OF 5

DWG FILE: 2531-04-173E3.DWG

H:\DWG-25\2531-04.173\DWG\2531-04-173E3.DWG

System Real Estate Office
OFFICIAL DOCUMENT

Prepared by Associate General Counsel
New Campus at TAMUCT
OGC File No. 2003-0526-113
EDG 10/28/2005

Attachment: Declaration of Gift Agreement (1102 : Ordinance 2014-055 Third Addendum to agreement between TAMU and City)

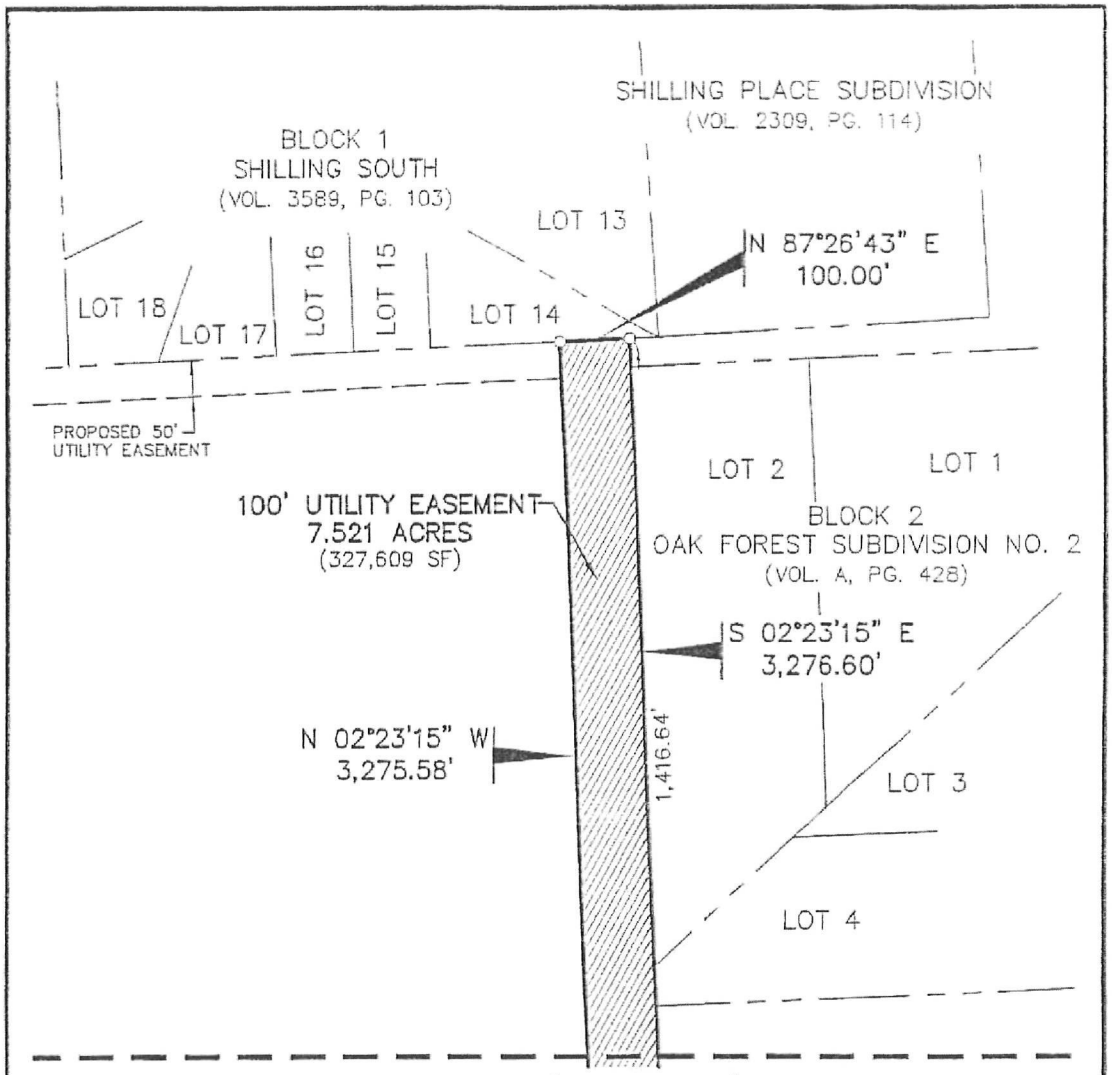

System Real Estate Office
OFFICIAL DOCUMENT

Prepared by Associate General Counsel
New Campus at TAMU-T
OGC File No. 2005-000383
EDC-10/28/2005

Attachment: Declaration of Gift Agreement (1102 : Ordinance 2014-055 Third Addendum to agreement between TAMU and City)

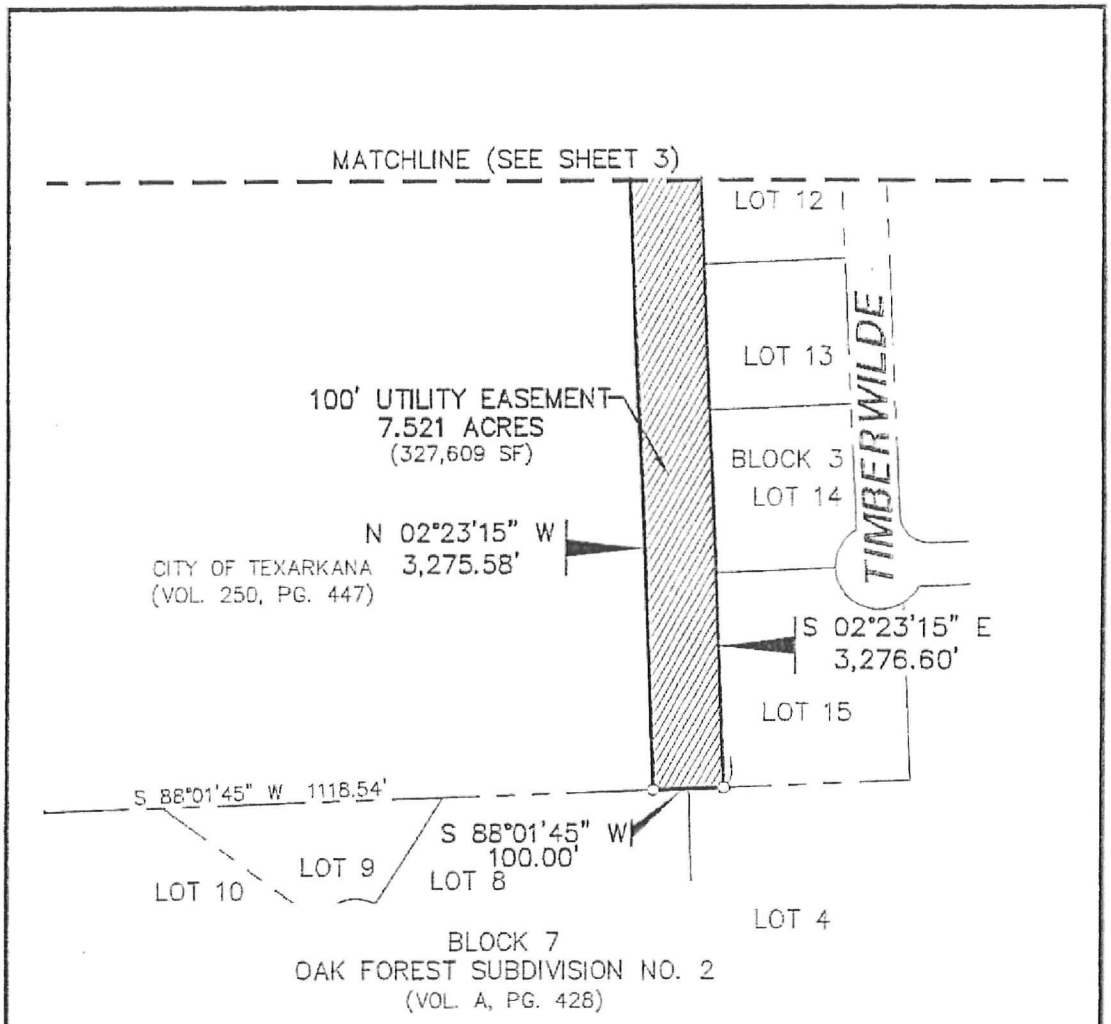

LEGEND

— — — —	PROPERTY LINE
———	EASEMENT LINE
(C.M.) - CONTROLLING MONUMENT	

NOTES:

A legal description of even survey date herewith accompanies this plat of survey.

Bearing system for this survey is based on NAD 83 Texas State Plane Coordinate System, North Central Zone.

0 100 200 400

GRAPHIC SCALE IN FEET

Pacheco Koch Consulting Engineers

8350 N CENTRAL EXPWY SUITE 1000 DALLAS, TEXAS 75206 972.235.3031

DRAWN BY	CHECKED BY	SCALE	DATE	JOB NUMBER
CRG	MLL	1"=200'	OCTOBER 2004	2531-04.173

100' UTILITY EASEMENT
7.521 ACRES

LOCATED IN THE CITY OF TEXARKANA, TEXAS
AND BEING OUT OF THE
J.W. FORT HRS. SURVEY, ABSTRACT NO. 218 AND
BOWIE COUNTY, TEXAS
SHEET 5 OF 5

DWG FILE: 2531-04-173E3.DWG

H:\DWG - 25\2531-04.173\DWG\2531-04-173E3.DWG

System Real Estate Office
OFFICIAL DOCUMENT

Prepared by Associate General Counsel
New Campus at TAMU-T
OGC File No. 2003-000583
EDC 10/28/2005

Attachment: Declaration of Gift Agreement (1102 : Ordinance 2014-055 Third Addendum to agreement between TAMU and City)

EXHIBIT "A"

50' UTILITY EASEMENT
J.W. Fort HRS., Abstract No. 218
City of Texarkana, Bowie County, Texas

DESCRIPTION, of a 1.745 acre tract of land situated in the J.W. Fort HRS., Abstract No. 218, Bowie County, Texas; said tract being part of those tracts of land described by that Deed, Conveyance and Assignment to the City of Texarkana, Texas recorded in Volume 250, Page 447 of the Deed Records of Bowie County, Texas; said 1.745 acre tract being more particularly described as follows:

BEGINNING, at a point for corner on the south line of Lot 14, Block 1, Shilling South, an addition to the City of Texarkana, Texas recorded in Volume 3589, Page 103 of the Deed Records of Bowie County, Texas; said point being South 87 degrees, 26 minutes, 43 seconds West, a distance of 100.00 feet from the northwest corner of Lot 2, Block 2 Oak Forest Subdivision No. 2, an addition to the City of Texarkana according to the plat thereof recorded in Volume A, Page 428 of the Map Records of Bowie County, Texas;

THENCE, South 02 degrees, 23 minutes, 15 seconds East, a distance of 50.00 feet to a point for corner;

THENCE, South 87 degrees, 26 minutes, 43 seconds West, a distance of 1,520.31 feet to a point for corner;

THENCE, North 02 degrees, 33 minutes, 17 seconds West, a distance of 50.00 feet to a point for corner in the south line of Lot 16, Block 1 Shilling South Second Addition, an addition to the City of Texarkana according to the plat thereof recorded in Volume 4247, Page 80 of the Map Records of Bowie County, Texas;

THENCE, North 87 degrees, 26 minutes, 43 seconds East, along the said south line of Block 1 Shilling South Second Addition and the aforesaid south line of Block 1 Shilling South, a distance of 1,520.45 feet to the POINT OF BEGINNING;

CONTAINING, 76,019 square feet or 1.745 acres of land, more or less.

(A survey plat of even survey date herewith accompanies this description.)

The undersigned, Registered Professional Land Surveyor, hereby certifies that the foregoing description accurately sets out the metes and bounds of the easement tract described.

1/17/05

James A. Koch, Jr. Date
Registered Professional Land Surveyor No. 4688
Pacheco Koch Consulting Engineers, Inc.
8350 N. Central Expwy., #1000, Dallas TX 75206
(972) 235-3031

STATE OF TEXAS REGISTERED JAMES A. KOCH, JR. 4688 PROFESSIONAL LAND SURVEYOR

50' UE.doc
2531-04.173

SHEET 1 OF 3

System Real Estate Office
OFFICIAL DOCUMENT

Prepared by Associate General Counsel
New Campus at TAMU-T
OGC File No. 2003-0006383
EDG-10/28/2005

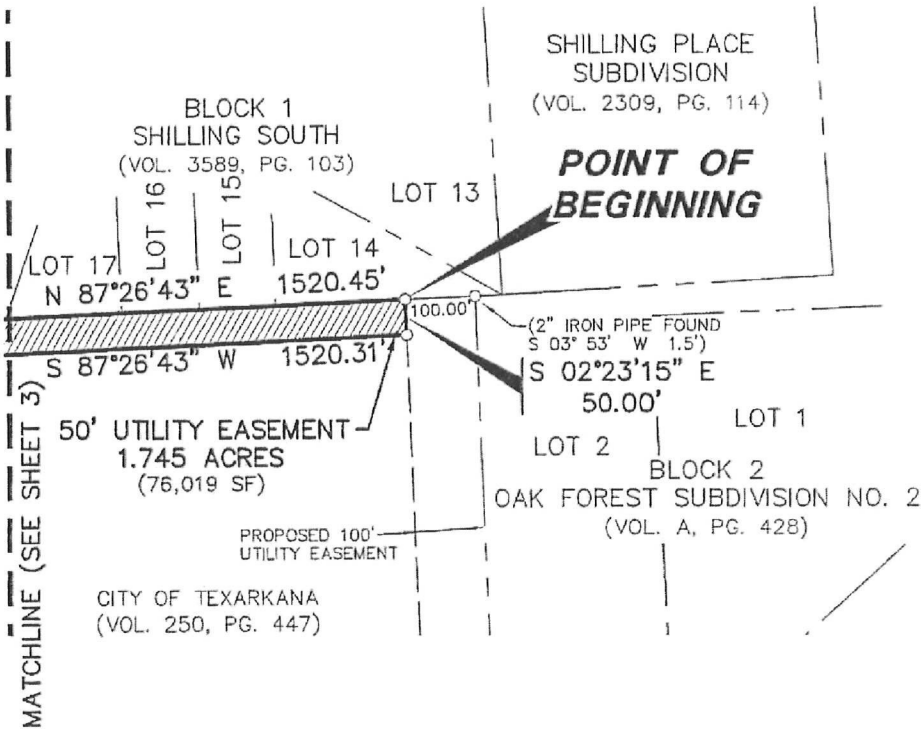

LEGEND

PROPERTY LINE
EASEMENT LINE
(C.M.) - CONTROLLING MONUMENT

NOTES:

1. A legal description of even survey date herewith accompanies this plot of survey.

2. Bearing system for this survey is based on NAD 83 Texas State Plane Coordinate System, North Central Zone.

0 100 200 400
GRAPHIC SCALE IN FEET

Pacheco Koch Consulting Engineers
8350 N CENTRAL EXPWY SUITE 1000 DALLAS, TEXAS 75206 972.235.3031

DRAWN BY	CHECKED BY	SCALE	DATE	JOB NUMBER
CRG	MLL	1"=200'	OCTOBER 2004	2531-04.173

50' UTILITY EASEMENT
1.745 ACRES

LOCATED IN THE CITY OF TEXARKANA, TEXAS
AND BEING OUT OF THE
J.W. FORT HRS. SURVEY, ABSTRACT NO. 218 AND
BOWIE COUNTY, TEXAS
SHEET 2 OF 3

M:\DWG-25\2531-04.173\DWG\2531-04-173E4.DWG

DWG FILE: 2531-04-173E4.DWG

System Real Estate Office
OFFICIAL DOCUMENT

Prepared by Associate General Counsel
New Campus at TAMU-T
OGC File No. 2003-006-183
EDG 10/28/2005

Attachment: Declaration of Gift Agreement (1102 : Ordinance 2014-055 Third Addendum to agreement between TAMU and City)

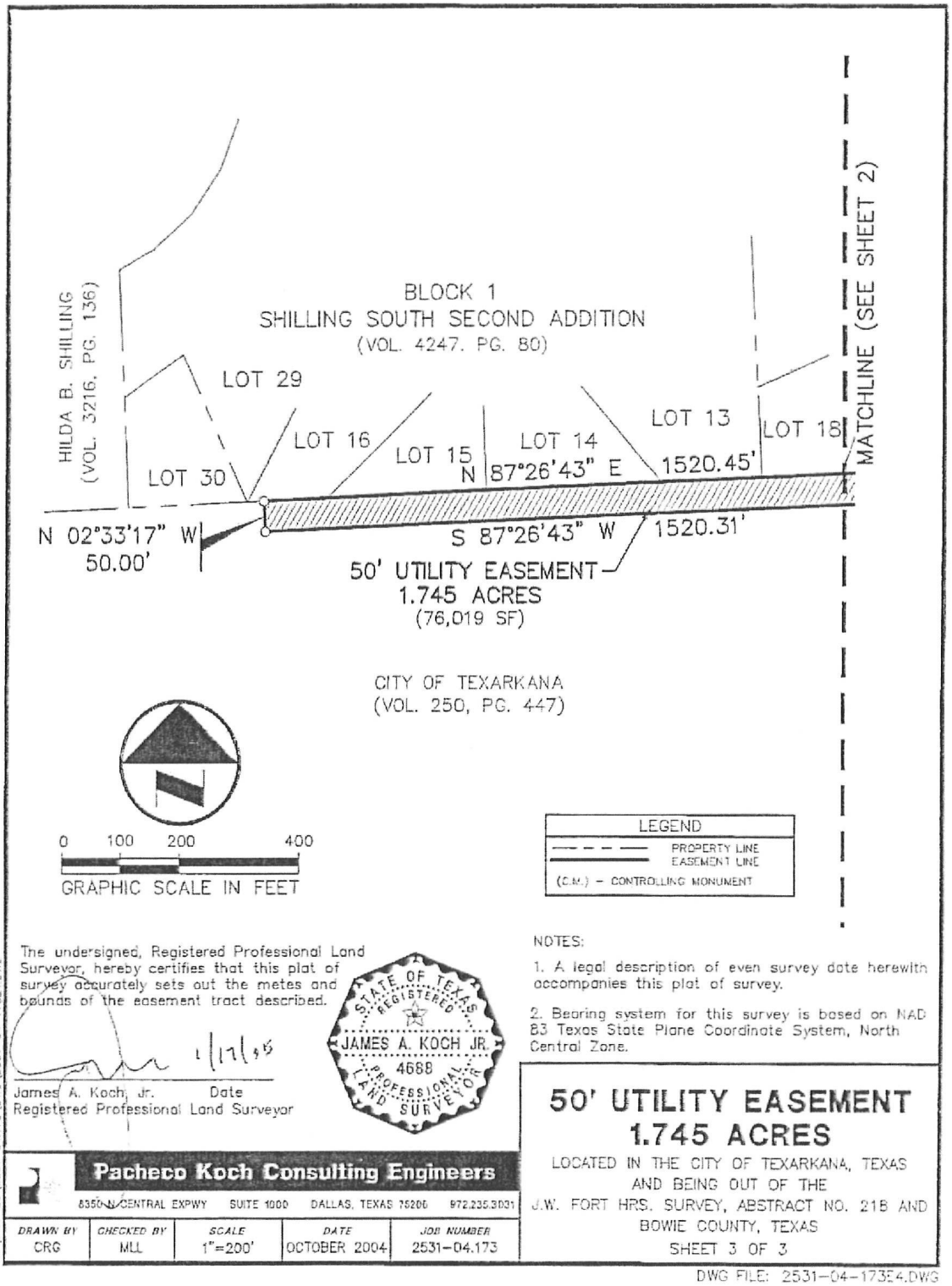

System Real Estate Office
OFFICIAL DOCUMENT

Prepared by Associate General Counsel
New Campus at TAMU-T
OGC File No. 2003-0006383
EDG-10/28/2005

EXHIBIT "A"

40' UTILITY EASEMENT
1.228 ACRES
J.W. Fort HRS., Abstract No. 218
City of Texarkana, Bowie County, Texas

DESCRIPTION, of a 1.228 acre tract of land situated in the J.W. Fort HRS., Abstract No. 218, Bowie County, Texas; said tract being part of those tracts of land described by that Deed, Conveyance and Assignment to the City of Texarkana, Texas recorded in Volume 250, Page 447 of the Deed Records of Bowie County, Texas; said 1.228 acre tract being more particularly described as follows:

BEGINNING, at a point being the southwest corner of Lot 15, Block 3 of Oak Forest Subdivision No. 2, an addition to the City of Texarkana according to the plat thereof recorded in Volume A, Page 428 of the Map Records of Bowie County, Texas; said point being the southeast corner of said City of Texarkana tract;

THENCE, South 88 degrees, 01 minutes, 45 seconds West, along the north line of Block 7, said Oak Forest Addition, a distance of 100.00 feet to a point for corner on the west line of a 100-foot wide Arkansas Rural Electric Corporation easement recorded in Volume _____, Page ____ of the Deed Records of Bowie County, Texas;

THENCE, North 02 degrees, 23 minutes, 15 seconds West, along the said west line of the 100-foot wide easement, a distance of 1309.51 feet to the POINT OF BEGINNING;

THENCE, departing the said west line of the 100-foot wide easement, traversing said City of Texarkana tract, the following thirteen (13) calls:

South 64 degrees, 25 minutes, 20 seconds West, a distance of 261.86 feet to a point for corner;

South 55 degrees, 27 minutes, 08 seconds West, a distance of 595.36 feet to a point for corner;

South 33 degrees, 10 minutes, 07 seconds East, a distance of 51.06 feet to a point for corner;

South 56 degrees, 49 minutes, 53 seconds West, a distance of 40.00 feet to a point for corner;

North 33 degrees, 10 minutes, 07 seconds West, a distance of 51.87 feet to a point for corner;

South 60 degrees, 37 minutes, 20 seconds West, a distance of 359.44 feet to a point for corner;

North 29 degrees, 22 minutes, 40 seconds West, a distance of 40.00 feet to a point for corner;

North 60 degrees, 37 minutes, 20 seconds East, a distance of 377.30 feet to a point for corner;

SHEET 1 OF 3

System Real Estate Office
OFFICIAL DOCUMENT

Prepared by Associate General Counsel
New Campus at TAMU-T
OGC File No. 2063.[illegible]
EDG-[illegible]

40' UTILITY EASEMENT
(CONTINUED)

North 55 degrees, 27 minutes, 08 seconds East, a distance of 597.01 feet to a point for corner;

North 30 degrees, 04 minutes, 10 seconds West, a distance of 20.00 feet to a point for corner;

North 59 degrees, 55 minutes, 50 seconds East, a distance of 40.00 feet to a point for corner;

South 30 degrees, 04 minutes, 10 seconds East, a distance of 20.00 feet to a point for corner;

North 64 degrees, 25 minutes, 20 seconds East, a distance of 262.08 feet to a point for corner on the said west line of the 100-foot wide easement;

THENCE, South 02 degrees, 23 minutes, 15 seconds East, along the said west line of the 100-foot wide easement, a distance of 43.52 feet to the POINT OF BEGINNING;

CONTAINING, 53,473 square feet or 1.228 acres of land, more or less.

(A survey plat of even survey date herewith accompanies this description.)

The undersigned, Registered Professional Land Surveyor, hereby certifies that the foregoing description accurately sets out the metes and bounds of the easement tract described.

1/17/05

James A. Koch, Jr. Date
Registered Professional Land Surveyor No. 4688
Pacheco Koch Consulting Engineers, Inc.
8350 N. Central Expwy., #1000, Dallas TX 75206
(972) 235-3031

STATE OF TEXAS
REGISTERED
JAMES A. KOCH, JR.
4688
PROFESSIONAL
LAND SURVEYOR

40' UTIL ESMT.doc
2531-04.173 srd

SHEET 2 OF 3

System Real Estate Office
OFFICIAL DOCUMENT

Prepared by Associate General Counsel
New Campus or TAMUCT
OGC File No. 2003-000e383
EDG-10/28/2005

Attachment: Declaration of Gift Agreement (1102 : Ordinance 2014-055 Third Addendum to agreement between TAMU and City)

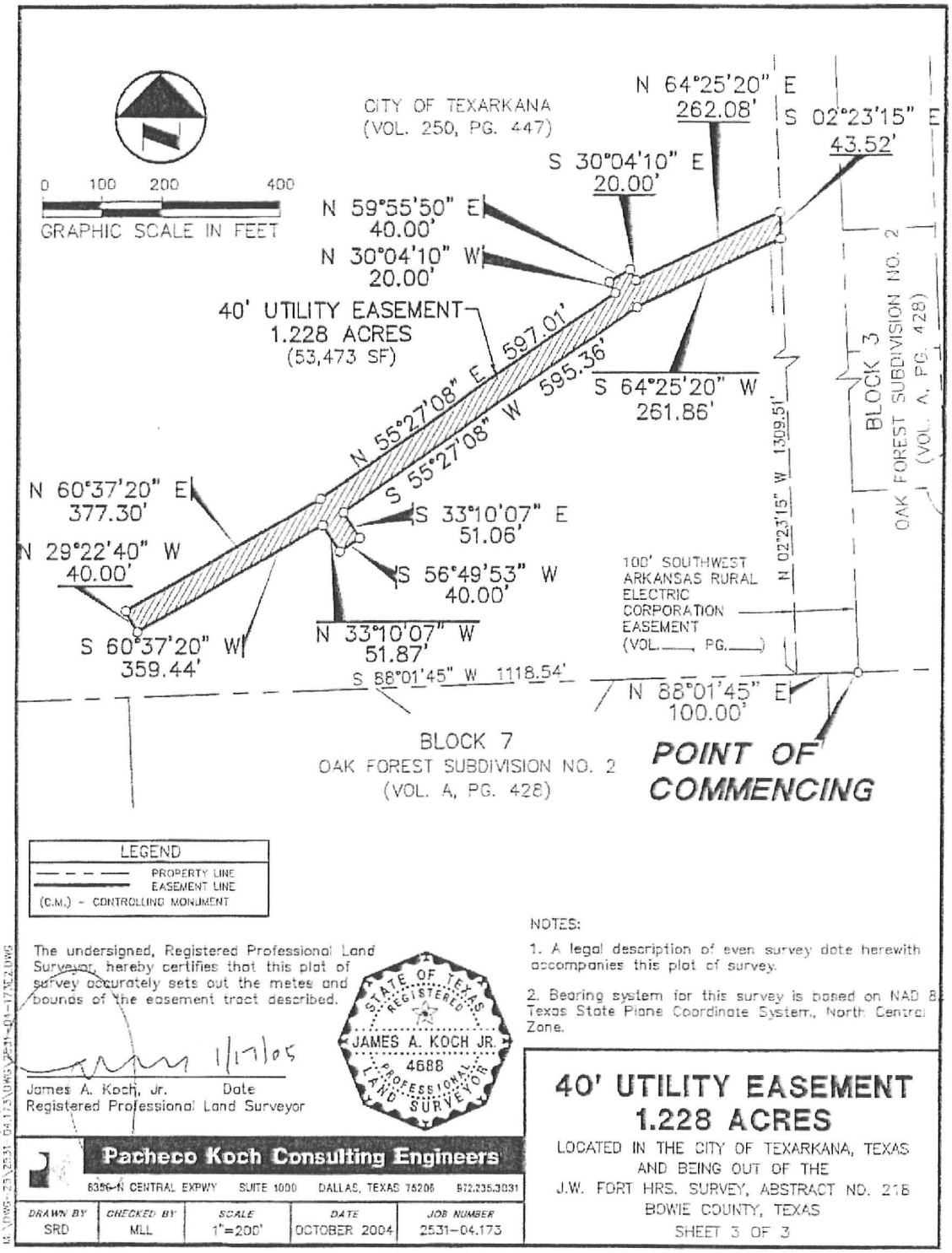

System Real Estate Office
OFFICIAL DOCUMENT

Prepared by Associate General Counsel
New Campus at TAMU-T
OGC File No. 2005-000383
EDG-10/28/2005

Attachment: Declaration of Gift Agreement (1102 : Ordinance 2014-055 Third Addendum to agreement between TAMU and City)

EXHIBIT "A"

VARIABLE WIDTH UTILITY EASEMENT
J.W. Fort HRS., Abstract No. 218
City of Texarkana, Bowie County, Texas

DESCRIPTION, of a 6.674 acre tract of land situated in the J.W. Fort HRS., Abstract No. 218, Bowie County, Texas; said tract being part of those tracts of land described by that Deed, Conveyance and Assignment to the City of Texarkana, Texas recorded in Volume 250, Page 447 of the Deed Records of Bowie County, Texas; said 6.674 acre tract being more particularly described as follows:

BEGINNING, at a 1/2-inch iron pipe found for corner; said point being the southeasterly corner of Lot 2, Block 1 Bringle Lake Subdivision, an addition to the City of Texarkana, Texas, according to the plat recorded in Volume 4294, Page 289 of the Map Records of Bowie County, Texas;

THENCE, North 32 degrees, 32 minutes, 10 seconds East, along the southeast line of said Lot 2, a distance of 60.37 feet to a point for corner;

THENCE, North 88 degrees, 27 minutes, 23 seconds East, departing the said the southeast line of said Lot 2, a distance of 1,600.00 feet to a point for corner;

THENCE, North 79 degrees, 23 minutes, 07 seconds East, a distance of 200.00 feet to a point for corner;

THENCE, North 88 degrees, 01 minutes, 48 seconds East, a distance of 2,153.82 feet to a point for corner;

THENCE, North 08 degrees, 02 minutes, 46 seconds West, a distance of 81.67 feet to a point for corner;

THENCE, North 66 degrees, 17 minutes, 38 seconds East, a distance of 31.16 feet to a point for corner;

THENCE, South 08 degrees, 02 minutes, 46 seconds East, a distance of 93.28 feet to a point for corner;

THENCE, North 88 degrees, 01 minutes, 48 seconds East, a distance of 16.69 feet to a point for corner;

THENCE, South 02 degrees, 59 minutes, 49 seconds East, a distance of 523.30 feet to a point for corner;

THENCE, South 66 degrees, 45 minutes, 51 seconds East, a distance of 253.19 feet to a point for corner in the north line of Lot 10, Block 7, Oak Forest Subdivision No. 2, an addition to the City of Texarkana, Texas, according to the plat recorded in Volume A, Page 428 of the Map Records of Bowie County, Texas;

SHEET 1 OF 6

System Real Estate Office
OFFICIAL DOCUMENT

Prepared by Associate General Counsel
New Campus at TAMU-T
OGC File No. 2003-0006383
EDG 10/28/2005

THENCE, South 88 degrees, 01 minutes, 45 seconds West, along the said north line of Lot 10, a distance of 46.96 feet to a point for corner;

THENCE, North 66 degrees, 45 minutes, 51 seconds West, departing the said north line of Lot 10, a distance of 234.29 feet to a point for corner in the east line of Lot 15, Block 1, North Fork, an addition to the City of Texarkana, Texas, according to the plat recorded in Volume 3504, Page 250 of the Map Records of Bowie County, Texas;

THENCE, North 02 degrees, 59 minutes, 49 seconds West, along the said east line of Block 1, a distance of 451.33 feet to a point for corner; said point being the northeast corner Lot 13, said Block 1;

THENCE, South 88 degrees, 01 minutes, 48 seconds West, along the said north line of Block 1, a distance of 2,378.27 feet to a 1/2-inch iron rod with "Texas JHG 1715" cap found for corner;

THENCE, South 88 degrees, 27 minutes, 23 seconds West, a distance of 1,625.77 feet to the POINT OF BEGINNING;

CONTAINING, 290,731 square feet or 6.674 acres of land, more or less.

(A survey plat of even survey date herewith accompanies this description.)

The undersigned, Registered Professional Land Surveyor, hereby certifies that the foregoing description accurately sets out the metes and bounds of the easement tract described.

1/17/05

James A. Koch, Jr. Date
Registered Professional Land Surveyor No. 4688
Pacheco Koch Consulting Engineers, Inc.
8350 N. Central Expwy., #1000, Dallas TX 75206
(972) 235-3031

STATE OF TEXAS REGISTERED JAMES A. KOCH, JR. 4688 PROFESSIONAL LAND SURVEYOR

VW UE.doc
2531-04.173

SHEET 2 OF 6

System Real Estate Office
OFFICIAL DOCUMENT

Prepared by Associate General Counsel
New Campus at TAMU-T
OGC File No. 2003-000383
EDG 10/28/2005

Attachment: Declaration of Gift Agreement (1102 : Ordinance 2014-055 Third Addendum to agreement between TAMU and City)

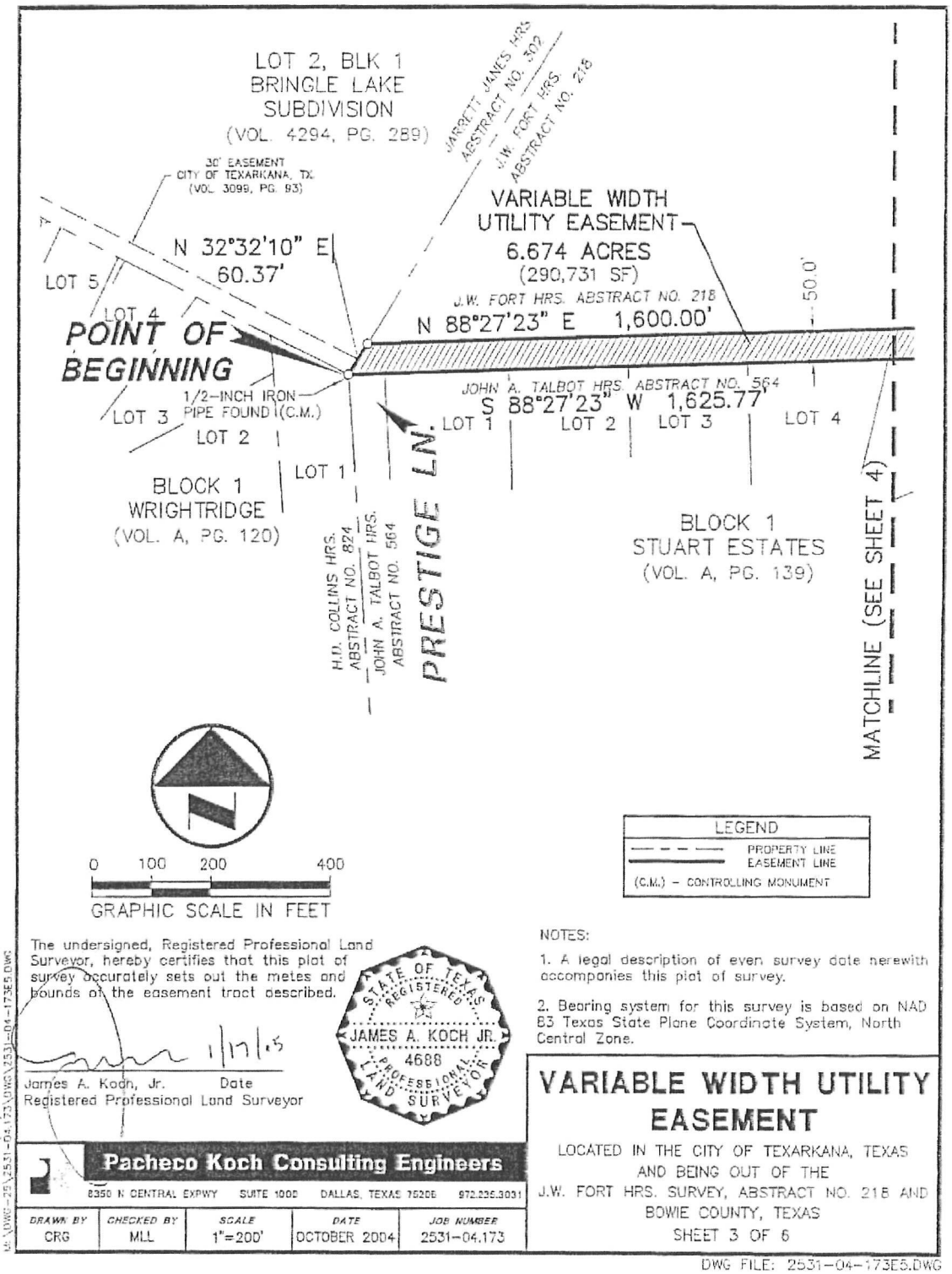

System Real Estate Office
OFFICIAL DOCUMENT

Prepared by Associate General Counsel
New Campus at TAMU-T
OGC File No. 2005-0006383
EDG-10-25-2005

Attachment: Declaration of Gift Agreement (1102 : Ordinance 2014-055 Third Addendum to agreement between TAMU and City)

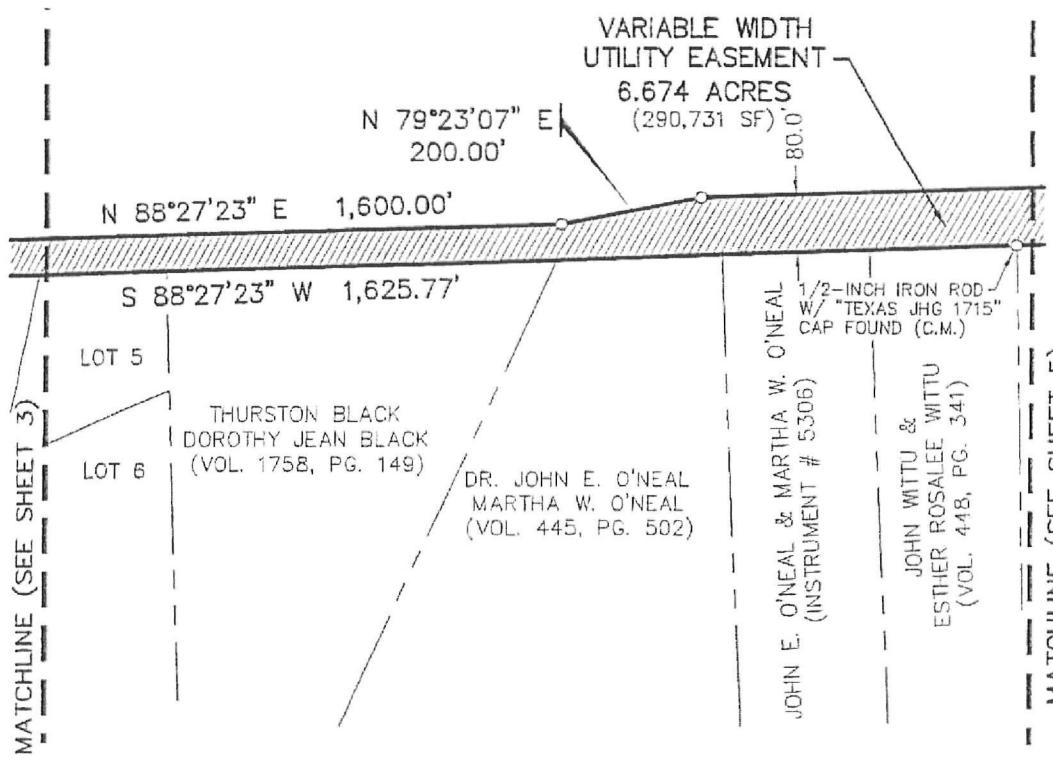

LEGEND

PROPERTY LINE
EASEMENT LINE
(C.M.) - CONTROLLING MONUMENT

NOTES:

1. A legal description of even survey date herewith accompanies this plat of survey.

2. Bearing system for this survey is based on NAD 83 Texas State Plane Coordinate System, North Central Zone.

0 100 200 400

GRAPHIC SCALE IN FEET

Pacheco Koch Consulting Engineers

8350 N CENTRAL EXPWY SUITE 1000 DALLAS, TEXAS 75206 972.235.3031

DRAWN BY	CHECKED BY	SCALE	DATE	JOB NUMBER
CRG	MLL	1"=200'	OCTOBER 2004	2531-04.173

VARIABLE WIDTH UTILITY EASEMENT

LOCATED IN THE CITY OF TEXARKANA, TEXAS
AND BEING OUT OF THE
J.W. FORT HRS. SURVEY, ABSTRACT NO. 218 AND
BOWIE COUNTY, TEXAS
SHEET 4 OF 6

DWG FILE: 2531-04-173EE.DWG

System Real Estate Office
OFFICIAL DOCUMENT

Prepared by Associate General Counsel
New Campus at TAMU-T
OGC File No. 2005-0026385
EDG-10/28/2005

Attachment: Declaration of Gift Agreement (1102 : Ordinance 2014-055 Third Addendum to agreement between TAMU and City)

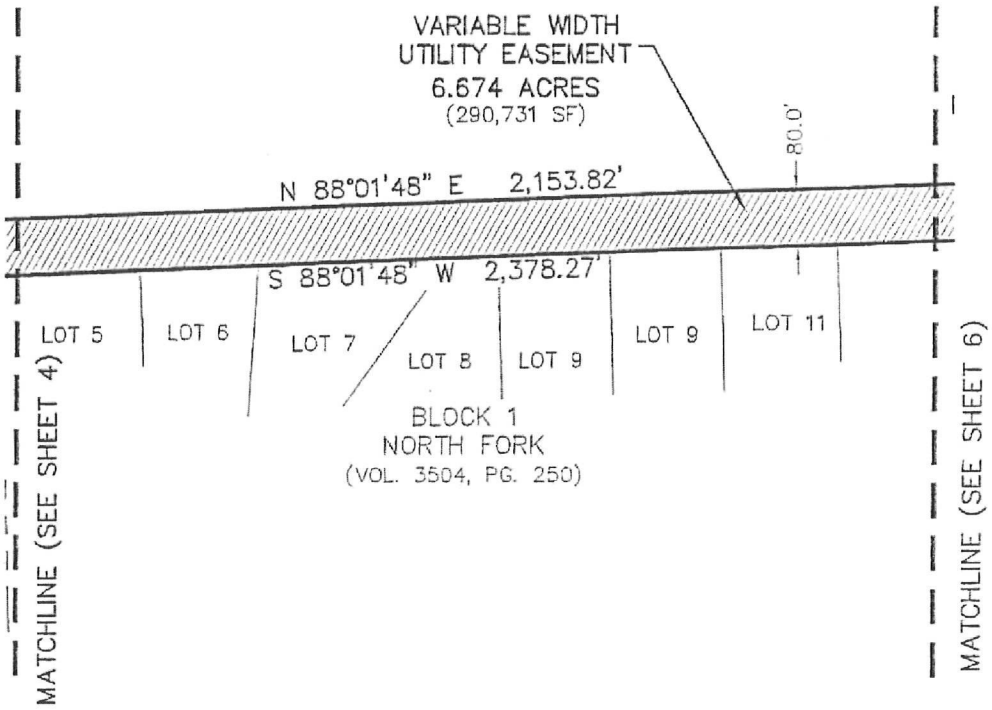

LEGEND

PROPERTY LINE
EASEMENT LINE
(C.M.) – CONTROLLING MONUMENT

NOTES:

1. A legal description of even survey date herewith accompanies this plat of survey.

2. Bearing system for this survey is based on NAD 83 Texas State Plane Coordinate System, North Central Zone.

0 100 200 400
GRAPHIC SCALE IN FEET

Pacheco Koch Consulting Engineers
6350 N CENTRAL EXPWY SUITE 1000 DALLAS, TEXAS 75206 972.235.3031

DRAWN BY	CHECKED BY	SCALE	DATE	JOB NUMBER
CRG	MLL	1"=200'	OCTOBER 2004	2531–04.173

VARIABLE WIDTH UTILITY EASEMENT

LOCATED IN THE CITY OF TEXARKANA, TEXAS
AND BEING OUT OF THE
J.W. FORT HRS. SURVEY, ABSTRACT NO. 218 AND
BOWIE COUNTY, TEXAS
SHEET 5 OF 6

DWG FILE: 2531–04–173E5.DWG

H:\DWG 25\2531–04.173\DWG\2531–04–173E5.DWG

System Real Estate Office
OFFICIAL DOCUMENT

Prepared by Associate General Counsel
New Campus at TAMU-T
OGC File No. 2006-0306.313
EDG-10.28.2005

Attachment: Declaration of Gift Agreement (1102 : Ordinance 2014-055 Third Addendum to agreement between TAMU and City)

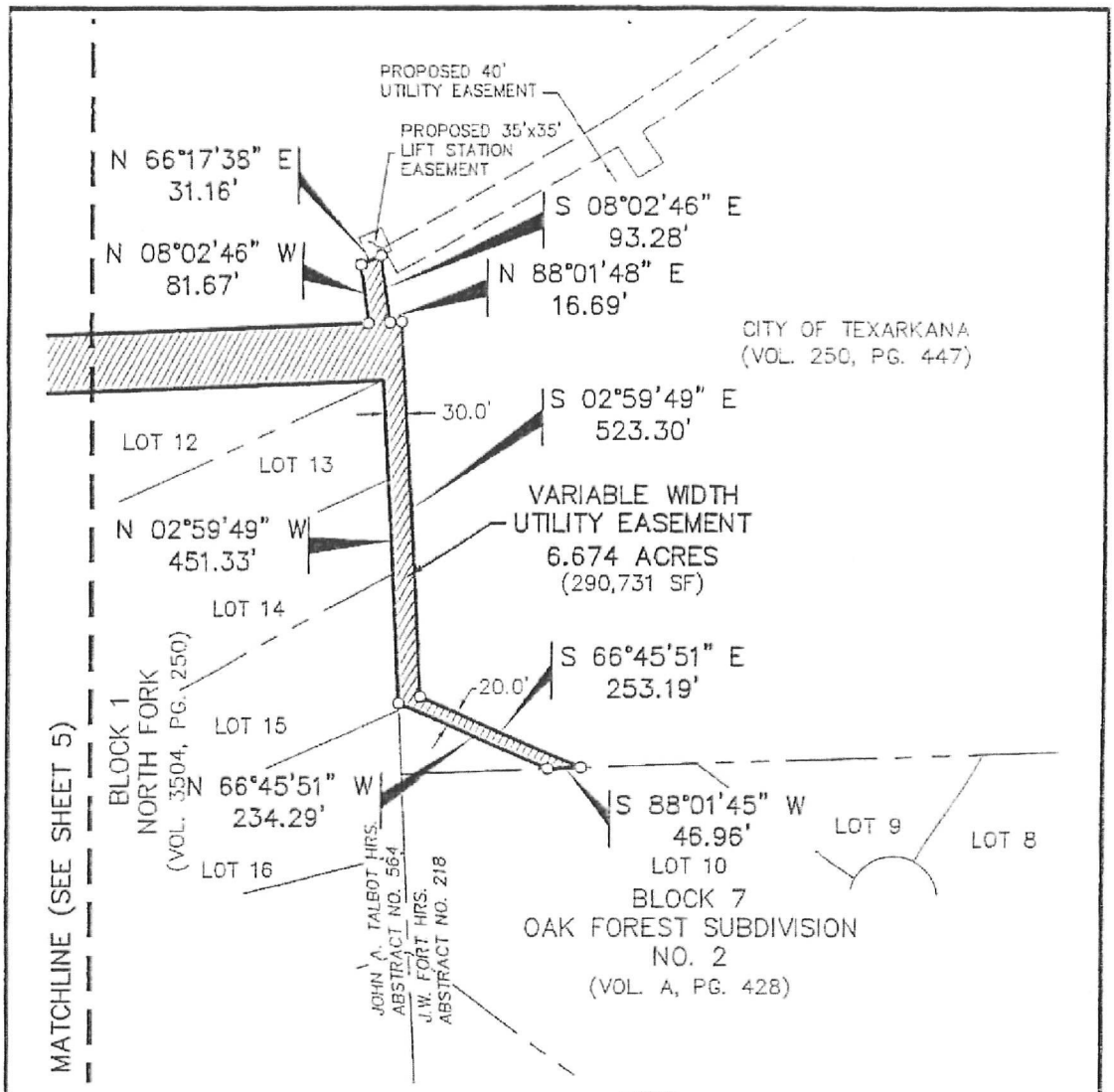

NOTES:

1. A legal description of even survey date herewith accompanies this plat of survey.

2. Bearing system for this survey is based on NAD 83 Texas State Plane Coordinate System, North Central Zone.

0 100 200 400
GRAPHIC SCALE IN FEET

LEGEND
PROPERTY LINE
EASEMENT LINE
(C.M.) – CONTROLLING MONUMENT

Pacheco Koch Consulting Engineers
8350 N. CENTRAL EXPWY SUITE 1000 DALLAS TEXAS 75206 972.235.3031

DRAWN BY	CHECKED BY	SCALE	DATE	JOB NUMBER
CRG	MLL	1"=200'	OCTOBER 2004	2531-04.173

VARIABLE WIDTH UTILITY EASEMENT

LOCATED IN THE CITY OF TEXARKANA, TEXAS AND BEING OUT OF THE J.W. FORT HRS. SURVEY, ABSTRACT NO. 218 AND BOWIE COUNTY, TEXAS

SHEET 6 OF 6

DWG FILE: 2531-04-173E5.DWG

H:\DWG-25\2531-04.173\DWG\2531-04-173E5.DWG

System Real Estate Office
OFFICIAL DOCUMENT

Prepared by Associate General Counsel
New Campus at TAMU-T
OGC File No. 2003-06
EDS-10/28/2002

Attachment: Declaration of Gift Agreement (1102 : Ordinance 2014-055 Third Addendum to agreement between TAMU and City)

EXHIBIT "E"

FUTURE EASEMENTS TO BE RETAINED AT CLOSING

UTILITY EASEMENT 1

J.W. Fort HRS, Abstract No. 218
Jarrett Janes HRS, Abstract No. 302
City of Texarkana, Texas, Bowie County, Texas

DESCRIPTION, of a thirty foot (30') utility easement (water main, sanitary sewer main and fiber optic cable) situated in the J.W. Fort HRS, Abstract No. 218, and in the Jarrett Janes HRS, Abstract No. 302, Bowie County, Texas; said utility easement being fifteen feet (15') in width on each side of the following described centerline:

All that certain tract or parcel of land situated in the J.W. Fort HRS, Abstract No. 218, and in the Jarrett Janes Headright Survey, A-302, in Bowie County, Texas, said centerline being more particularly described by metes and bounds as follows:

COMMENCING at a ½-inch iron rod found at the northwest corner of the terminus of Deerwood Street (a 60-foot wide right-of-way); said point being the southwest corner of Lot 8, Block 2, Oak Forest Subdivision No. 2, an addition to the City of Texarkana according to the plat thereof recorded on Volume A, Page 428 of the Map Records of Bowie County, Texas;

THENCE, South 02 degrees, 23 minutes, 15 seconds East, along the west line of said Block 3, a distance of 1859.96 feet to a point for corner on the north line of Lot 4, Block 7 of said Oak Forest Subdivision No. 2;

THENCE, South 88 degrees, 01, minutes, 45 seconds West, along the north line of said Block 7, a distance of 1218.55 feet to a ½-inch iron rod found for corner on the east line of Lot 16, Block 1 of North Fork, an addition to the City of Texarkana according to the plat thereof recorded in Volume 3504, Page 250 of the Map Records of Bowie County, Texas; said point being the northwest corner of Lot 10 of said Block 7;

THENCE, North 02 degrees, 59 minutes, 49 seconds West, along the east line of said Block 1, a distance of 551.13 feet to a point for corner, said point being the northernmost corner of Lot 13 and the easternmost corner of Lot 12 of said Block 1;

THENCE, North 04 degrees, 13 minutes, 51 seconds West, 192.34 feet to the POINT OF BEGINNING of this easement centerline, said POB being located at an existing sanitary sewer lift station;

THENCE, North 16 degrees, 35 minutes, 22 seconds West, 432.23 feet to a point;

THENCE, North 50 degrees, 18 minutes, 05 seconds West, 1003.11 feet to a point;

System Real Estate Office
OFFICIAL DOCUMENT

Prepared by Associate General Counsel
New Campus at TAMU-T
OGC File No. 2003-0006383
EDG-10/28/2005

Attachment: Declaration of Gift Agreement (1102 : Ordinance 2014-055 Third Addendum to agreement between TAMU and City)

THENCE, North 33 degrees, 22 minutes, 05 seconds West, 1363.99 feet to a point;

THENCE, North 18 degrees, 11 minutes, 38 seconds West, 779.24, feet to a point ending this easement centerline, containing 2.465 acres of land, more or less.

System Real Estate Office
OFFICIAL DOCUMENT

Prepared by Associate General Counsel
New Campus at TAMUT
OGC File No. 2002-0095.E3
EDG-10/28/2005

Attachment: Declaration of Gift Agreement (1102 : Ordinance 2014-055 Third Addendum to agreement between TAMU and City)

UTILITY EASEMENT 2

J.W. Fort HRS, Abstract No. 218
Jarrett Janes HRS, Abstract No. 302
City of Texarkana, Texas, Bowie County, Texas

DESCRIPTION, of a thirty foot (30') utility easement (water main, sanitary sewer main and fiber optic cable) situated in the J.W. Fort HRS, Abstract No. 218, and in the Jarrett Janes HRS, Abstract No. 302, Bowie County, Texas; said utility easement being fifteen feet (15') in width on each side of the following described centerline:

All that certain tract or parcel of land situated in the J.W. Fort HRS, Abstract No. 218, and in the Jarrett Janes Headright Survey, A-302, in Bowie County, Texas, said centerline being more particularly described by metes and bounds as follows:

COMMENCING at a ½-inch iron rod found at the northwest corner of the terminus of Deerwood Street (a 60-foot wide right-of-way); said point being the southwest corner of Lot 8, Block 2, Oak Forest Subdivision No. 2, an addition to the City of Texarkana according to the plat thereof recorded on Volume A, Page 428 of the Map Records of Bowie County, Texas;

THENCE, South 02 degrees, 23 minutes, 15 seconds East, along the west line of said Block 3, a distance of 1859.96 feet to a point for corner on the north line of Lot 4, Block 7 of said Oak Forest Subdivision No. 2;

THENCE, South 88 degrees, 01, minutes, 45 seconds West, along the north line of said Block 7, a distance of 1218.55 feet to a ½-inch iron rod found for corner on the east line of Lot 16, Block 1 of North Fork, an addition to the City of Texarkana according to the plat thereof recorded in Volume 3504, Page 250 of the Map Records of Bowie County, Texas; said point being the northwest corner of Lot 10 of said Block 7;

THENCE, North 02 degrees, 59 minutes, 49 seconds West, along the east line of said Block 1, a distance of 551.13 feet to a point for corner, said point being the northernmost corner of Lot 13 and the easternmost corner of Lot 12 of said Block 1;

THENCE, North 04 degrees, 13 minutes, 51 seconds West, 192.34 feet to a point, said point being located at an existing sanitary sewer lift station;

THENCE, North 16 degrees, 35 minutes, 22 seconds West, 432.23 feet to a point;

THENCE, North 50 degrees, 18 minutes, 05 seconds West, 1003.11 feet to a point;

THENCE, North 33 degrees, 22 minutes, 05 seconds West, 250.13 feet to the POINT OF BEGINNING of this easement centerline;

THENCE, North 37 degrees, 26 minutes, 31 seconds East, 281.80 feet to a point;

System Real Estate Office
OFFICIAL DOCUMENT

Prepared by Associate General Counsel
New Campus at TAMUT
OGC File No. 2003-0062383
EDG-10/28/2005

THENCE, North 15 degrees, 15 minutes, 14 seconds East, 1030.36 feet to a point;

THENCE, South 88 degrees, 36 minutes, 35 seconds East, 57.65, feet to a point ending this easement centerline, said endpoint being located at an existing sanitary sewer lift station, containing 0.943 acres of land, more or less.

System Real Estate Office
OFFICIAL DOCUMENT

Prepared by Associate General Counsel
New Campus at TAMU 7
OGC File No. 2005-000685
BDG-10/28/2005

Attachment: Declaration of Gift Agreement (1102 : Ordinance 2014-055 Third Addendum to agreement between TAMU and City)

UTILITY EASEMENT 3

J.W. Fort HRS, Abstract No. 218
Jarrett Janes HRS, Abstract No. 302
City of Texarkana, Texas, Bowie County, Texas

DESCRIPTION, of a thirty foot (30') utility easement (water main, sanitary sewer main and fiber optic cable) situated in the J.W. Fort HRS, Abstract No. 218, and in the Jarrett Janes HRS, Abstract No. 302, Bowie County, Texas; said utility easement being fifteen feet (15') in width on each side of the following described centerline:

All that certain tract or parcel of land situated in the J.W. Fort HRS, Abstract No. 218, and in the Jarrett Janes Headright Survey, A-302, in Bowie County, Texas, said centerline being more particularly described by metes and bounds as follows:

COMMENCING at a ½-inch iron rod found at the northwest corner of the terminus of Deerwood Street (a 60-foot wide right-of-way); said point being the southwest corner of Lot 8, Block 2, Oak Forest Subdivision No. 2, an addition to the City of Texarkana according to the plat thereof recorded on Volume A, Page 428 of the Map Records of Bowie County, Texas;

THENCE, South 02 degrees, 23 minutes, 15 seconds East, along the west line of said Block 3, a distance of 1859.96 feet to a point for corner on the north line of Lot 4, Block 7 of said Oak Forest Subdivision No. 2;

THENCE, South 88 degrees, 01, minutes, 45 seconds West, along the north line of said Block 7, a distance of 1218.55 feet to a ½-inch iron rod found for corner on the east line of Lot 16, Block 1 of North Fork, an addition to the City of Texarkana according to the plat thereof recorded in Volume 3504, Page 250 of the Map Records of Bowie County, Texas; said point being the northwest corner of Lot 10 of said Block 7;

THENCE, North 02 degrees, 59 minutes, 49 seconds West, along the east line of said Block 1, a distance of 551.13 feet to a point for corner, said point being the northernmost corner of Lot 13 and the easternmost corner of Lot 12 of said Block 1;

THENCE, North 04 degrees, 13 minutes, 51 seconds West, 192.34 feet to a point, said point being located at an existing sanitary sewer lift station;

THENCE, North 16 degrees, 35 minutes, 22 seconds West, 432.23 feet to a point;

THENCE, North 50 degrees, 18 minutes, 05 seconds West, 1003.11 feet to a point;

THENCE, North 33 degrees, 22 minutes, 05 seconds West, 856.31 feet to the POINT OF BEGINNING of this easement centerline;

THENCE, South 58 degrees, 12 minutes, 14 seconds West, 497.20, feet to a point ending this easement centerline, containing 0.342 acres of land, more or less.

System Real Estate Office
OFFICIAL DOCUMENT

Prepared by Associate General Counsel
New Campus at TAMU-T
OGC File No. 2003-000385
EDG-10/28/2005

UTILITY EASEMENT 4
Lift Station Site

J.W. Fort HRS, Abstract No. 218
Jarrett Janes HRS, Abstract No. 302
City of Texarkana, Texas, Bowie County, Texas

DESCRIPTION, of a utility easement situated in the J.W. Fort HRS, Abstract No.218 and in the Jarrett Janes HRS, Abstract No. 302, Bowie County, Texas; said utility easement being more particularly described by metes and bounds as follows:

All that certain tract or parcel of land situated in the J.W. Fort HRS, Abstract No. 218 and in the Jarrett Janes Headright Survey, A-302, in Bowie County, Texas, subject easement being more particularly described by metes and bounds as follows:

COMMENCING at a ½-inch iron rod found at the northwest corner of the terminus of Deerwood Street (a 60-foot wide right-of-way); said point being the southwest corner of Lot 8, Block 2, Oak Forest Subdivision No. 2, an addition to the City of Texarkana according to the plat thereof recorded on Volume A, Page 428 of the Map Records of Bowie County, Texas;

THENCE, South 02 degrees, 23 minutes, 15 seconds East, along the west line of said Block 3, a distance of 1859.96 feet to a point for corner on the north line of Lot 4, Block 7 of said Oak Forest Subdivision No. 2;

THENCE, South 88 degrees, 01, minutes, 45 seconds West, along the north line of said Block 7, a distance of 1218.55 feet to a ½-inch iron rod found for corner on the east line of Lot 16, Block 1 of North Fork, an addition to the City of Texarkana according to the plat thereof recorded in Volume 3504, Page 250 of the Map Records of Bowie County, Texas; said point being the northwest corner of Lot 10 of said Block 7;

THENCE, North 02 degrees, 59 minutes, 49 seconds West, along the east line of said Block 1, a distance of 551.13 feet to a point for corner, said point being the northernmost corner of Lot 13 and the easternmost corner of Lot 12 of said Block 1;

THENCE, North 04 degrees, 13 minutes, 51 seconds West, 192.34 feet to a point, said point being located at an existing sanitary sewer lift station;

THENCE, North 16 degrees 35 minutes, 22 seconds West, 432.23 feet to a point;

THENCE, North 50 degrees, 18 minutes, 05 seconds West, 1003.11 feet to a point;

THENCE, North 33 degrees, 22 minutes, 05 seconds West, 225.00 feet to the POINT OF BEGINNING for the herein described easement;

System Real Estate Office
OFFICIAL DOCUMENT

Prepared by Associate General Counsel
New Campus at TAMU-T
OGC File No. 2005-000038
BDG-10.28.2005

THENCE, East, 25.0 feet;

THENCE, North, 50.0 feet;

THENCE, West, 50.0 feet;

THENCE, South, 50.0 feet;

THENCE, East, 25.0 feet to the POINT OF BEGINNING and containing 0.057 acres (2,500 square feet of land, more or less.

System Real Estate Office
OFFICIAL DOCUMENT

Prepared by: Associate General Counsel
New Campus at TAMU-T
OGC File No. 2005-000383
EDC-10/28/2005

Attachment: Declaration of Gift Agreement (1102 : Ordinance 2014-055 Third Addendum to agreement between TAMU and City)

UTILITY EASEMENT 5

J.W. Fort HRS, Abstract No. 218
City of Texarkana, Texas, Bowie County, Texas

DESCRIPTION, of a thirty foot (30') utility easement (water main, sanitary sewer main and fiber optic cable) situated in the J.W. Fort HRS, Abstract No. 218, Bowie County, Texas; said utility easement being fifteen feet (15') in width on each side of the following described centerline:

All that certain tract or parcel of land situated in the J.W. Fort HRS, Abstract No. 218, and in the Jarrett Janes Headright Survey, A-302, in Bowie County, Texas, said centerline being more particularly described by metes and bounds as follows:

COMMENCING at a ½-inch iron rod found at the northwest corner of the terminus of Deerwood Street (a 60-foot wide right-of-way); said point being the southwest corner of Lot 8, Block 2, Oak Forest Subdivision No. 2, an addition to the City of Texarkana according to the plat thereof recorded on Volume A, Page 428 of the Map Records of Bowie County, Texas;

THENCE, South 02 degrees, 23 minutes, 15 seconds East, 529.22 feet to the POINT OF BEGINNING of this easement centerline, said easement centerline being centered over an existing twelve inch (12") sanitary sewer main;

THENCE, South 83 degrees, 43 minutes, 11 seconds West, 302.84 feet to a point;

THENCE, South 58 degrees, 16 minutes, 37 seconds West, 158.87 feet to a point;

THENCE, South 48 degrees, 54 minutes, 21 seconds West, 430.86 feet to a point;

THENCE, South 62 degrees, 42 minutes, 01 seconds West, 500.24, feet to a point ending this easement centerline, said endpoint being located at an existing sanitary sewer lift station, containing 0.959 acres of land, more or less.

System Real Estate Office
OFFICIAL DOCUMENT

Prepared by Associate General Counsel
New Campus at TAMU-T
OGC File No. 2005-0006283
EDG-10/28/2005

Attachment: Declaration of Gift Agreement (1102 : Ordinance 2014-055 Third Addendum to agreement between TAMU and City)

UTILITY EASEMENT 6

J.W. Fort HRS, Abstract No. 218
City of Texarkana, Texas, Bowie County, Texas

DESCRIPTION, of a thirty foot (30') utility easement (water main, sanitary sewer main and fiber optic cable) situated in the J.W. Fort HRS, Abstract No. 218, Bowie County, Texas; said utility easement being fifteen feet (15') in width on each side of the following described centerline:

All that certain tract or parcel of land situated in the J.W. Fort HRS, Abstract No. 218, and in the Jarrett Janes Headright Survey, A-302, in Bowie County, Texas, said centerline being more particularly described by metes and bounds as follows:

COMMENCING at a ½-inch iron rod found at the northwest corner of the terminus of Deerwood Street (a 60-foot wide right-of-way); said point being the southwest corner of Lot 8, Block 2, Oak Forest Subdivision No. 2, an addition to the City of Texarkana according to the plat thereof recorded on Volume A, Page 428 of the Map Records of Bowie County, Texas;

THENCE, South 02 degrees, 23 minutes, 15 seconds East, 746.69 feet to the POINT OF BEGINNING of this easement centerline, said centerline being centered over an existing thirty inch (30") water main;

THENCE, South 53 degrees, 17 minutes, 08 seconds West, 889.09 feet to a point;

THENCE, South 83 degrees, 03 minutes, 02 seconds West, 461.76, feet to a point ending this easement centerline, containing 0.930 acres of land, more or less.

System Real Estate Office
OFFICIAL DOCUMENT

Prepared by Associate General Counsel
New Campus at TAMU-T
OGC File No. 2003-0006383
EDG 10.28.2005

Attachment: Declaration of Gift Agreement (1102 : Ordinance 2014-055 Third Addendum to agreement between TAMU and City)

FIRST ADDENDUM TO DECLARATION OF GIFT AGREEMENT

THIS FIRST ADDENDUM TO DECLARATION OF GIFT AGREEMENT (this "Addendum") is to resolve and amend certain obligations remaining under that certain Declaration of Gift Agreement (the "Agreement") by and between the City of Texarkana, Texas ("City") and The Texas A&M University System (the "A&M System") (collectively referred to herein as the "Parties") effective on November 7, 2005. The land gifted to the A&M System will be used to develop the campus of Texas A&M University-Texarkana (the "University").

Under Section (2) of the Agreement, the City agreed, at its expense, to construct or cause to be constructed a major thoroughfare connecting Richmond Road and Summerhill Road in two phases as shown on Exhibit "C" to the Agreement (for purposes of this Addendum, the entire thoroughfare shall be referred to as "University Boulevard" or the "Boulevard").

Construction of part of the first phase, from Richmond Road to the main entrance to the campus and continuing into the interior of the campus to the first set of driveways, has been completed by the City. However, in reviewing the obligations under the Agreement and the needs and obligations of the Parties, and in an effort to expedite the construction process, the Parties are willing to and have agreed to change the Parties' responsibilities and obligations set forth in the Agreement.

The parties have also agreed, subject to the approval of the Board of Regents of the A&M System, to re-convey 16.317 acres of the gift land back to the City and re-route the Phase II road construction as described in the Agreement. The re-conveyance and re-routing will be governed by a second addendum to be negotiated by the Parties.

NOW, THEREFORE, for good and valuable consideration, the receipt and sufficiency of which are acknowledged, the Parties agree as follows:

ARTICLE 1
EXTENSION OF INTERIOR CAMPUS ROAD

The City agrees to pay the University the sum of $100,000 for the University's extension of the interior campus road to the parking lots as shown on **Exhibit A** attached hereto and incorporated herein (the "Campus Road Extension"). Construction of the Campus Road Extension has been completed by the University, and the City agrees to pay the University $100,000 within ten (10) days of execution of this Addendum. At the request of the City, the University agrees to provide to the City documentation that supports the expenditure by the University of not less than $100,000 for the construction of the Campus Road Extension. The University further agrees to assume full and total responsibility for the maintenance of the Campus Road Extension.

System Real Estate Office
OFFICIAL DOCUMENT

Prepared by Office of General Counsel
City of Texarkana (16 AC) Land Sale
Legal Files 2010-0025698
1/12/11 - GMJ

ARTICLE 2
STUDENT HOUSING ACCESS ROAD

The City agrees to pay the University the sum of $350,750 for construction of a road from the proposed extension of University Boulevard to the new student housing project being constructed on the University's campus as shown on **Exhibit A** attached hereto and incorporated herein (the "Student Housing Access Road"). The Student Housing Access Road has been or will be constructed by the University, and the City agrees to pay the University $350,750 within ten (10) days of execution of this Addendum. At the request of the City, the University agrees to provide to the City documentation that supports the expenditure by the University of not less than $350,750 for the construction of the Student Housing Access Road. The University agrees to assume full and total responsibility for the maintenance of the Student Housing Access Road.

ARTICLE 3
MISCELLANEOUS

3.1 Revised Obligations. The payment by the City of the amounts set forth in this Addendum shall relieve the City of any obligations or responsibilities it may have had under the Agreement for construction of the Campus Road Extension and the Student Housing Access Road, and shall act as a full accord and satisfaction of the City's responsibilities for the construction of such roadways. The University accepts full and total responsibility for the construction of the Campus Road Extension and the Student Housing Access Road. Furthermore, the University accepts full and total responsibility for the maintenance of any and all roadways within the University's property, including without limitation, the Campus Road Extension and the Student Housing Access Road.

3.2 Other Terms. Except as expressly provided herein, all of the terms and conditions of the Agreement and any and all other documents described in or executed in connection with the Agreement shall continue in full force and effect and are hereby reaffirmed.

3.3 Time. Time is of the essence in respect to the performance of each provision of this Addendum.

[SIGNATURES FOLLOW ON NEXT PAGE]

Prepared by Office of General Counsel
City of Texarkana (16 AC) Land Sale
Legal Files 2010-0025698
1/12/11 - GMJ

System Real Estate Office
OFFICIAL DOCUMENT

EXECUTED to be effective the 11th day of February, 2011.

BOARD OF REGENTS OF THE TEXAS A&M UNIVERSITY SYSTEM

By: _____

MICHAEL D. MCKINNEY
Chancellor
The Texas A&M University System

APPROVAL RECOMMENDED:

_____

C. B. RATHBURN, PhD
President
Texas A&M University – Texarkana

APPROVED AS TO FORM:

_____

GINA M. JOSEPH
Assistant General Counsel
Office of General Counsel
The Texas A&M University System

CITY OF TEXARKANA, TEXAS

By: _____

F. LARRY SULLIVAN, ED.D.
Chief Executive Officer/City Manager

Exhibit A—Map showing Campus Road Extension and Student Housing Access Road

Prepared by Office of General Counsel
City of Texarkana (16 AC) Land Sale
Legal Files 2010-0025698
1/12/11 - GMJ

System Real Estate Office
OFFICIAL DOCUMENT

Attachment: First Adendum Declaration of Gift Agreement (1102 : Ordinance 2014-055 Third Addendum to agreement between TAMU and City)

System Real Estate Office
OFFICIAL DOCUMENT

Exhibit A

SECOND ADDENDUM TO DECLARATION OF GIFT AGREEMENT

THIS SECOND ADDENDUM TO DECLARATION OF GIFT AGREEMENT (this "Addendum") is to resolve and amend certain obligations remaining under that certain Declaration of Gift Agreement by and between the City of Texarkana, Texas ("City") and The Texas A&M University System (the "A&M System") dated effective November 7, 2005, as amended by a First Addendum to Declaration of Gift Agreement dated effective February ___, 2011 (collectively, the "Agreement"). The City and the A&M System are collectively referred to herein as the "Parties". The land gifted to the A&M System will be used to develop the campus of Texas A&M University-Texarkana (the "University").

Under Section (2) of the Agreement, the City agreed, at its expense, to construct or cause to be constructed a major thoroughfare connecting Richmond Road and Summerhill Road in two phases as shown on Exhibit "C" to the Agreement (for purposes of this Addendum, the entire thoroughfare shall be referred to as "University Boulevard" or the "Boulevard").

The first phase, from Richmond Road to the main campus and continuing into the interior of the campus to the first set of driveways, has been completed at the City's expense.

The Parties have determined that the second phase as described in the Agreement, from the end of the first phase to Summerhill Road, should be re-routed.

The City has agreed to provide limited funding for the construction of an additional road providing access from University Boulevard to the University's proposed sports complex.

The Parties also desire to reflect the reconveyance by the A&M System of 16.317 acres, more or less, to the City (the "16.317 Acre Parcel") in consideration of the benefits to the A&M System and the University under this Addendum, including the City's construction of the access road to the proposed sports complex described in Article 2 below.

NOW, THEREFORE, for good and valuable consideration, the receipt and sufficiency of which are acknowledged, the Parties agree as follows:

ARTICLE 1
UNIVERSITY BOULEVARD EXTENSION

1.1 Extension of University Boulevard to Summerhill Road. The City agrees to construct or cause to be constructed, at its cost, the extension of University Boulevard from its current terminus to Summerhill Road in four phases as follows:

a. Phase 1. Construct a bridge ("Bridge") across certain low-lying wetlands within the 16.317 Acre Parcel in the general location shown on **Exhibit A** attached hereto and made a part of this Addendum.

System Real Estate Office
OFFICIAL DOCUMENT

Prepared by Office of General Counsel
City of Texarkana (16 AC) Land Sale
Legal Files 2010-0025698
2/2/11 - GMJ

b. Phase 2. Construct the Boulevard from the Bridge to the existing Shillings Lane connection, including funding up to a maximum of $235,000 towards the construction of an access road to the University's proposed sports complex as shown on **Exhibit A.**

c. Phase 3. Construct the Boulevard from its current terminus to the Bridge as shown on **Exhibit A.**

d. Phase 4. Construct the Boulevard from Shillings Lane to Summerhill Road as shown on **Exhibit A.**

The City shall construct the extension of the Boulevard in Phases 1, 2 and 3 as no less than a four-lane concrete street with median and in accordance with City street standards. The City shall construct the extension of the Boulevard in Phase 4 as no less than a three-lane concrete street and in accordance with City street standards.

1.2 Construction Schedule. Construction for Phases 1, 2 and 3 shall be let by August 1, 2011.

ARTICLE 2
ACCESS ROAD TO PROPOSED SPORTS COMPLEX

The City agrees to provide limited funding in the amount of $235,000 towards the construction of a road from University Boulevard to the proposed sports complex on the University's campus as shown on **Exhibit A** (the "Sports Complex Access Road"). The Sports Complex Access Road will be constructed by the City during Phase 2 described above and will have a value to the University of no less than $235,000. If the cost of construction of the Sports Complex Access Road as shown on **Exhibit A** will exceed $235,000, then the City and the University shall attempt to agree on an alternate route not to exceed $235,000. If the access road is re-aligned, the parties will execute an easement in favor of the University for the route of the re-alignment. If the City and the University cannot reach an agreement on the alternate route, then the City shall pay the University the total of $235,000, deducting any monies expended by City towards the construction of the access road after execution of this Addendum, within ten (10) days of the City's receipt of the University's written request for same. Payment by the City of $235,000 as set forth in this Article 2 shall relieve the City of any obligation or responsibility for construction of the Sports Complex Access Road, and shall act as a full accord and satisfaction of the City's responsibility for the construction of such roadway.

The University agrees to assume full and total responsibility for the maintenance and repair of that portion of the Sports Complex Access Road that is on the University's campus, and the City agrees to assume full and total responsibility for the maintenance and repair of that portion of the Sports Complex Access Road on the City's property.

Prepared by Office of General Counsel
City of Texarkana (16 AC) Land Sale
Legal Files 2010-0025698
2/2/11 - GMJ

System Real Estate Office
OFFICIAL DOCUMENT

Attachment: Second Addendum Declaration of Gift Agreement (1102 : Ordinance 2014-055 Third Addendum to agreement between TAMU and

ARTICLE 3
RECONVEYANCE OF THE 16.317 ACRE PARCEL

Not later than February 15, 2011, the A&M System agrees to reconvey the 16.317 Acre Parcel to the City by Special Warranty Deed. The Special Warranty Deed shall include land restrictions and shall reserve an easement for public utilities and vehicular and pedestrian traffic from the Boulevard to the new student housing project and from the Boulevard to the proposed sports complex. The Special Warranty Deed shall be in the form of **Exhibit B** attached hereto and made a part of this Addendum.

ARTICLE 4
MISCELLANEOUS

4.1 Other Terms. Except as expressly provided herein, all of the terms and conditions of the Agreement and any and all other documents described in or executed in connection with the Agreement shall continue in full force and effect and are hereby reaffirmed.

4.2 Time. Time is of the essence in respect to the performance of each provision of this Addendum.

EXECUTED to be effective the 11th day of February, 2011.

[SIGNATURES FOLLOW ON NEXT PAGE]

Prepared by Office of General Counsel
City of Texarkana (16 AC) Land Sale
Legal Files 2010-0025698
2/2/11 - GMJ

System Real Estate Office
OFFICIAL DOCUMENT

BOARD OF REGENTS OF THE TEXAS A&M UNIVERSITY SYSTEM

By: _____
MICHAEL D. MCKINNEY
Chancellor
The Texas A&M University System

APPROVAL RECOMMENDED:

_____
C. B. RATHBURN, PhD
President
Texas A&M University – Texarkana

APPROVED AS TO FORM:

_____
GINA M. JOSEPH
Assistant General Counsel
Office of General Counsel
The Texas A&M University System

CITY OF TEXARKANA, TEXAS

By: _____
F. LARRY SULLIVAN, Ed.D.
Chief Executive Officer/City Manager

Exhibit A—University Boulevard Construction Phases
Exhibit B—Form Special Warranty Deed

Prepared by Office of General Counsel
City of Texarkana (16 AC) Land Sale
Legal Files 2010-0025698
2/2/11 - GMJ

System Real Estate Office
OFFICIAL DOCUMENT

System Real Estate Office
OFFICIAL DOCUMENT

Exhibit A

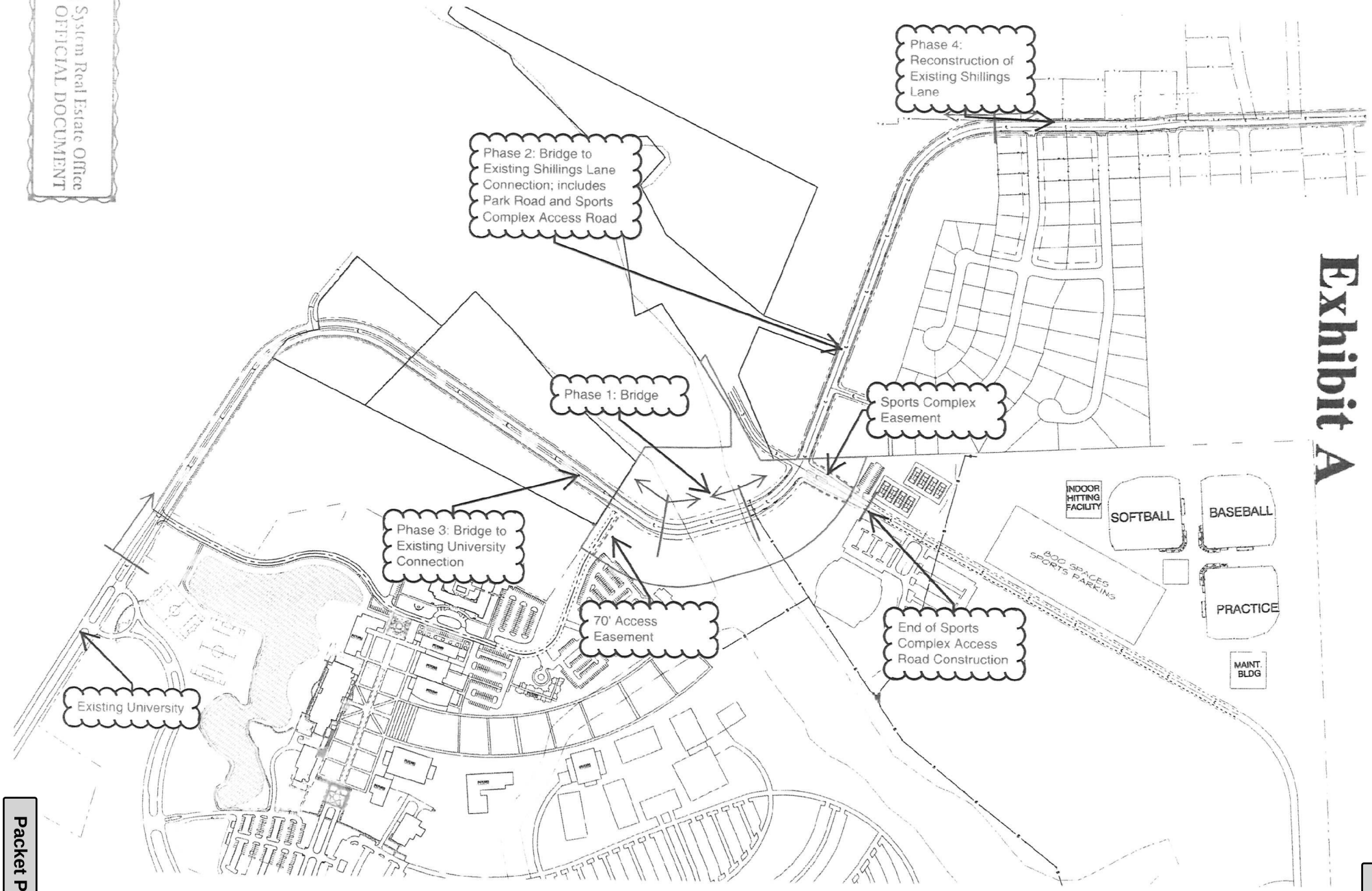

Exhibit B

SPECIAL WARRANTY DEED
(TAMUS - Seller)

DATE: _____, 2011

GRANTOR: **BOARD OF REGENTS OF THE TEXAS A&M UNIVERSITY SYSTEM** (hereafter referred to as "**TAMUS**")

GRANTOR'S MAILING ADDRESS: The Texas A&M University System
Office of General Counsel
Attn: System Real Estate
200 Technology Way, Suite 2079
College Station, Texas 77845-3424

GRANTEE: **CITY OF TEXARKANA, TEXAS ("CITY")**

GRANTEE'S MAILING ADDRESS: City of Texarkana, Texas
City Hall
Texas Municipal Building
West 3rd and Texas Blvd.
Texarkana, Texas 75501

CONSIDERATION: The sum of TEN AND NO/100 DOLLARS ($10.00) and other good and valuable consideration, the receipt and sufficiency of which are expressly acknowledged.

PROPERTY CONVEYED (including all improvements):

All that certain lot, tract or parcel of land lying and situated in the J.W. Fort Headright Survey, Abstract 218, Bowie County, Texas, being a part of that certain tract of land described as 306.903 acres in the Deed from the City of Texarkana, Texas, to The Texas A&M University System, dated December 8, 2005, recorded in Volume 4784, Page 37 of the Real Property Records of Bowie County, Texas, as more particularly described in the attached Exhibit "A".

RESERVATIONS FROM CONVEYANCE: **TAMUS** hereby retains for itself and its successors and assigns forever, a non-exclusive easement across those portions of the Property described on Exhibit "B" and Exhibit "C" attached hereto for utilities and vehicular and pedestrian ingress and egress to the remainder of the 306.903 acre parcel described above (the remainder being referred to hereafter as the "Texas A&M University-Texarkana Campus"). The easement herein retained shall be perpetual and appurtenant to the Texas A&M University-Texarkana Campus. **TAMUS** shall have the right, at its expense, to construct and maintain (i) utilities on, over, under and across the easement property and (ii) a roadway and related improvements, such as curb, gutter and drainage structures, on the easement property. **TAMUS** shall have the right to use so much of the surface of the adjacent property as reasonably necessary to construct and maintain the road and utilities as long as it does not interfere with the **CITY**'s use of the Property. **CITY** represents, warrants, covenants, acknowledges and agrees

System Real Estate Office
OFFICIAL DOCUMENT

Attachment: Second Addendum Declaration of Gift Agreement (1102 : Ordinance 2014-055 Third Addendum to agreement between TAMU and

for and on behalf of itself and its successors and assigns as owner of the Property herein conveyed that the terms and conditions to such easement rights are reasonable, fair and just.

TAMUS reserves, and does not convey hereunder, any and all oil, gas and other mineral interests, with no right of surface use for exploration or production, for itself, its successors and assigns.

EXCEPTIONS TO CONVEYANCE AND WARRANTY: This conveyance is made subject to all reservations, covenants, restrictions, easements, rights of way, and other matters affecting the Property of record in the Official Public Records of Bowie County, Texas, or apparent on the ground.

THE CONVEYANCE OF THE PROPERTY AS PROVIDED FOR HEREIN IS MADE ON AN "AS IS" CONDITION AND BASIS, WITH ALL FAULTS.

TAMUS, for the consideration and subject to the Reservations from Conveyance and the Exceptions to Conveyance and Warranty, **GRANTS**, **SELLS**, and **CONVEYS** to **CITY** the Property, together with all and singular the rights and appurtenances thereto in any wise belonging, to have and to hold to **CITY, CITY**'s successors and assigns forever. **TAMUS** binds itself and its successors and assigns to **WARRANT** and **FOREVER DEFEND** all and singular the Property to **CITY** and **CITY**'s successors and assigns against every person whomsoever lawfully claiming or to claim the same or any part thereof when the claim is by, through, or under **TAMUS** but not otherwise, except as to the Reservations from Conveyance and the Exceptions to Conveyance and Warranty.

RESTRICTIONS: The Property is subject to the following restrictions, which run with the land, shall be binding on **CITY**, its successors and assigns, and inure to the benefit of **TAMUS**, its successors and assigns:

> In no event shall the Property or any portion thereof be used for the operation of the following: (i) any type of sexually oriented business including, without limitation, massage parlors, modeling studios, tanning salons, bookstores or video sales or rent stores primarily engaged in the sale or rental of sexually explicit materials; provided, that, nothing herein shall prohibit incidental sales or rentals of videos by a nationally recognized video sales and rental outlet such as, by way of example, Blockbuster Video (for purposes hereof, "**incidental**" sales or rentals shall mean sales and rentals which, in the aggregate, do not account for more than 10% of the total revenues derived from the operation of the business on the property); (ii) any establishment engaged in gaming activities, provided that the sale of lottery tickets shall not be considered a gaming activity for this purpose; (iii) drug or alcohol treatment facility; (iv) tattoo parlor; (v) head shop or other facility which sells drug paraphernalia, (vi) any dry cleaner (except that a dry cleaner that uses non-toxic chemicals or dry cleaner facility which serves only as a drop off and pick up for customers shall be permitted), (vii) laundromat which is open to the public (laundry facilities appurtenant to a residential facility which is available for use by the residents will be permitted); (viii) the sale of firearms or ammunition

System Real Estate Office
OFFICIAL DOCUMENT

Attachment: Second Addendum Declaration of Gift Agreement (1102 : Ordinance 2014-055 Third Addendum to agreement between TAMU and

for firearms; (ix) second hand or surplus store; (x) sale, rental or storage of new or used motor vehicles including, without limitation, automobiles, trucks, trailers, motorcycles, boats or recreational vehicles; (xi) junk yard or surplus store; (xii) any mortuary or funeral home; (xiii) any fire or bankruptcy sale or auction house operation; (xiv) a self-storage facility; or (xv) single-family residences.

BOARD OF REGENTS OF THE TEXAS A&M UNIVERSITY SYSTEM, an agency of the State of Texas

For Exhibit Purposes Only
DO NOT SIGN

By: _____
MICHAEL D. MCKINNEY
Chancellor
The Texas A&M University System

APPROVED AS TO FORM:
For Exhibit Purposes Only
DO NOT SIGN

_____
GINA M. JOSEPH
Assistant General Counsel
Office of General Counsel
The Texas A&M University System

ACKNOWLEDGMENT

STATE OF TEXAS §
§
COUNTY OF BRAZOS §

This instrument was acknowledged before me on this _____ day of _____, 2011 by **MICHAEL D. MCKINNEY**, Chancellor of The Texas A&M University System, on behalf of the Board of Regents of The Texas A&M University System, an agency of the State of Texas.

For Exhibit Purposes Only
DO NOT SIGN

_____
Notary Public

Prepared by Office of General Counsel
City of Texarkana (16 AC) Land Sale
Legal Files 2010-0025698
2/2/11-GMJ

System Real Estate Office
OFFICIAL DOCUMENT

Attachment: Second Addendum Declaration of Gift Agreement (1102 : Ordinance 2014-055 Third Addendum to agreement between TAMU and

ACCEPTED by **CITY** this ___ day of _____, 2011, to be effective on the date first set forth above.

CITY OF TEXARKANA, TEXAS

For Exhibit Purposes Only
DO NOT SIGN

By: _____
F. LARRY SULLIVAN, Ed.D.
Chief Executive Officer/City Manager

AFTER RECORDING RETURN TO:
The Texas A&M University System
Office of General Counsel
Attn: System Real Estate
200 Technology Way, Suite 2079
College Station, Texas 77845-3424

Prepared by Office of General Counsel
City of Texarkana (16 AC) Land Sale
Legal Files 2010-0025698
2/2/11-GMJ

System Real Estate Office
OFFICIAL DOCUMENT

Exhibit A

Property Description
16.317 Acres
Bowie County, Texas

All that certain lot, tract or parcel of land lying and situated in the J. W. Fort Headright Survey, Abstract 218, Bowie County, Texas, being a part of that certain tract of land described as 306.903 acres in the deed from The City of Texarkana, Texas, to The Texas A&M University System, dated December 8, 2005, recorded in Volume 4784, Page 37 of the Real Property Records of Bowie County, Texas, and being more particularly described by metes and bounds as follows:

BEGINNING at a 2 inch steel pipe found for a corner (control monument no. 1), an angle point for the said 306.903 acre tract and the Southwest corner for that certain tract of land described as Tract No. 2, with 40.616 acres in the deed from Hilda B. Shilling, et al, to Aven C. Williamson, dated June 5, 2003, recorded in Volume 4004, Page 335 of the Real Property Records of Bowie County, Texas;

THENCE North 87 degrees 27 minutes 33 seconds East (basis of bearings) a distance of 532.18 feet along the North line of the said 306.903 acre tract and the South line of the said 40.616 acre tract to a 1/2 inch steel rod capped MTG 101011-00 set for a corner, said corner bears South 87 degrees 27 minutes 33 seconds West a distance of 358.15 feet from a 1/2 inch steel rod capped Texas JHG 1715 found for a corner (control monument no. 2), the Southeast corner of the said 40.616 acre tract and the Southwest corner of the Revised Shilling South Second Addition, a subdivision of a part of the J. W. Fort Headright Survey, Abstract 218, Bowie County, Texas, according to the plat thereof recorded in Volume 4247, Page 80 of the Real Property Records of Bowie County, Texas;

THENCE South 19 degrees 55 minutes 04 seconds West a distance of 86.15 feet to a 1/2 inch steel rod capped MTG 101011-00 set for a corner, at the beginning of a circular curve to the right, tangent to the said line;

THENCE in a Southwesterly direction a distance of 750.39 feet along the arc of the said circular curve, with a delta angle of 54 degrees 24 minutes 43 seconds, a radius of 790.16 feet, a chord bearing of South 47 degrees 07 minutes 26 seconds West, and a chord distance of 722.51 feet, to a 1/2 inch steel rod capped MTG 101011-00 set for a corner, at the end of the said circular curve;

THENCE South 74 degrees 19 minutes 48 seconds West, tangent to the said line a distance of 242.52 feet to a 1/2 inch steel rod capped MTG 101011-00 set for a corner, at the beginning of a circular curve to the right;

THENCE in a Northwesterly direction a distance of 513.75 feet along the arc of the said circular curve, with a delta angle of 49 degrees 52 minutes 55 seconds, a radius of 590.11 feet, a chord bearing of North 80 degrees 43 minutes 45 seconds West, and a chord distance of 497.68 feet to a 1/2 inch steel rod capped MTG 101011-00 set for a corner, at the end of the said circular curve;

THENCE North 56 degrees 34 minutes 47 seconds West, tangent to the said line a distance of 169.25 feet to a 1/2 inch steel rod capped MTG 101011-00 set for a corner, lying in the West line of the said 306.903 acre tract, the East line of that certain tract of land described as Lot No. 2A, Block No. 1, of the Replat of Lot No. 2, Block No. 1, Bringle Lake Subdivision, a subdivision of a part of the Jarrett Janes Headright Survey, Abstract 302, Bowie County, Texas, according to the plat thereof recorded in Volume 5095, Page 291 of the Real Property Records of Bowie County, Texas, the West line of the said J. W. Fort Headright Survey, and the East line of the said Jarrett Janes Headright Survey;

THENCE North 32 degrees 18 minutes 35 seconds East a distance of 133.26 feet along the West line of the said 306.903 acre tract, the East line of the said Lot No. 2A, the West line of the said J. W. Fort Headright Survey, and the East line of the said Jarrett Janes Headright Survey to a 1/2 inch steel rod capped TX MG 5760 found for a corner, the Northeast corner of the said Lot No. 2A, the Southeast corner of that certain tract of land described as the Eleventh Tract in the Jarrett Janes Headright, with 48 acres in the deed from Texarkana

System Real Estate Office
OFFICIAL DOCUMENT

Attachment: Second Addendum Declaration of Gift Agreement (1102 : Ordinance 2014-055 Third Addendum to agreement between TAMU and

Water Corporation to the City of Texarkana, Texas, dated August 27, 1948, recorded in Volume 250, Page 447 of the Deed Records of Bowie County, Texas, same being that certain tract of land described as 48 acres in the deed from A. C. Stuart, et ux, to Texarkana Water Corporation, dated July 10, 1928, recorded in Volume 131, Page 150 of the Deed Records of Bowie County, Texas;

THENCE North 32 degrees 07 minutes 37 seconds East at a distance of 430.88 passing 1/2 inch steel rod capped MTG 101011-00 set for a reference, continuing in all a distance of 461.35 feet along the West line of the said 306.903 acre tract, the West line of the said J. W. Fort Headright Survey, the East line of the said Jarrett Janes Headright Survey, and the East line of the said 48 acre tract to a point for a corner, lying in the West line of that certain tract of land described as First Tract in the Josiah W. Fort Headright, with 4 acres in the deed from Texarkana Water Corporation to the City of Texarkana, Texas, dated August 27, 1948, recorded in Volume 250, Page 447 of the Deed Records of Bowie County, Texas, same being that certain tract of land described as 4 acres in the deed from J. P Mears, et ux to Texarkana Water Corporation, dated June 18, 1928, recorded in Volume 131, Page 121 of the Deed Records of Bowie County, Texas, an angle point for the said 306.903 acre tract;

THENCE North 89 degrees 59 minutes 44 seconds East a distance of 310.93 feet along the North line of the said 306.903 acre tract to a point for a corner;

THENCE North 87 degrees 42 minutes 39 seconds East at a distance of 5.00 feet passing a 1/2 inch steel rod capped MTG 101011-00 set for a reference, continuing in all a distance of 120.71 feet along the North line of the said 306.903 acre tract to a 1/2 inch steel rod capped MTG 101011-00 set for a corner, an inside ell corner of the said 306.903 acre tract;

THENCE North 00 degrees 58 minutes 57 seconds West a distance of 183.27 feet along the West line of the said 306.903 acre tract to a 1/2 inch steel rod capped MTG 101011-00 set for a corner, at an angle point;

THENCE North 31 degrees 59 minutes 15 seconds West a distance of 292.08 feet along the West line of the said 306.903 acre tract to a 1/2 inch steel rod capped MTG 101011-00 set for a corner, lying in the West line of the said 4 acre tract, the East line of the said 48 acre tract, the West line of the said J. W. Fort Headright Survey, and the East line of the said Jarrett Janes Headright Survey, an angle point for the said 306.903 acre tract and the Southeast corner of that certain tract of land described as 20.773 acres in the deed from Truman and Anita Arnold Foundation to Aven C. Williamson, dated February 9, 2007, recorded in Volume 5089, Page 80 of the Real Property Records of Bowie County, Texas, same being that certain tract of land described as 20.845 acres in the deed from the Board of Regents of the Texas A&M University System to Truman and Anita Arnold Foundation, dated November 21, 2006, recorded in Volume 5034, Page 136 of the Real Property Records of Bowie County, Texas;

THENCE North 31 degrees 58 minutes 25 seconds East a distance of 44.02 feet along the East line of the said 20.773 acre tract, the West line of the said J. W. Fort Headright Survey, and the East Line of the said Jarrett Janes Headright survey to a 1/2 inch steel rod capped TX MG 5760 found for a corner an angle point for the said 20.773 acre tract, an angle point for the said 306.903 acre tract, an angle point for the said 40.616 acre tract;

THENCE South 27 degrees 34 minutes 18 seconds East a distance of 603.98 feet along the East line of the said 306.903 acre tract and the West line of the said 40.616 acre tract to the point of beginning and containing 16.317 acres of land, at the time of this survey.

The bearings are based on Grid North within the "Texas Coordinate System of 1983, North Central Zone", NAD83 (CORS96, epoch 2002.0), at the surface, with a bearing of North 87 degrees 27 minutes 33 seconds East.

This description is based on the survey and plat made by Mike Gardner,
Registered Professional Land Surveyor No. 5760, on September 29, 2010.

System Real Estate Office
OFFICIAL DOCUMENT

System Real Estate Office
OFFICIAL DOCUMENT

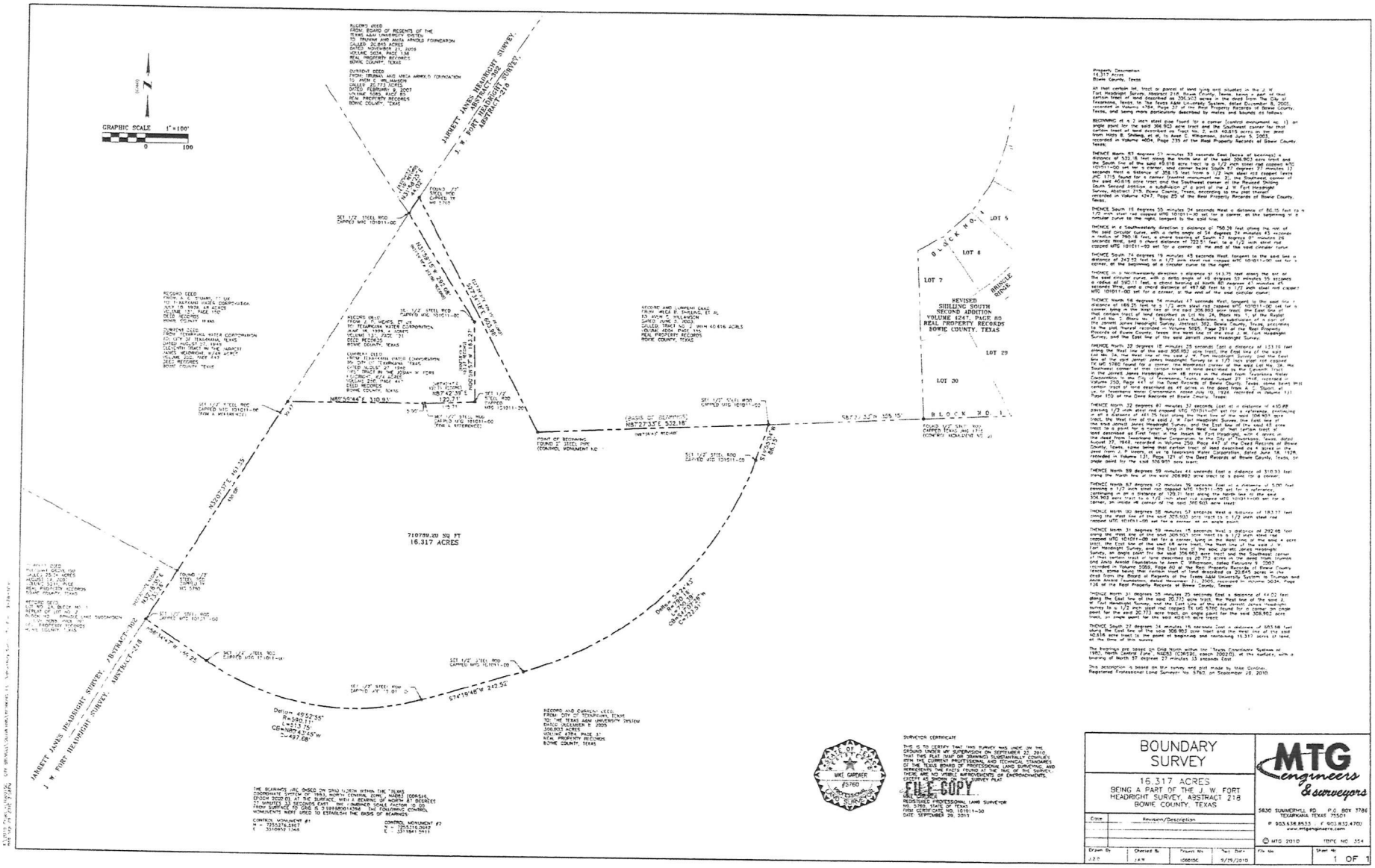

Texas Real Estate Office
OFFICIAL DOCUMENT

Exhibit B

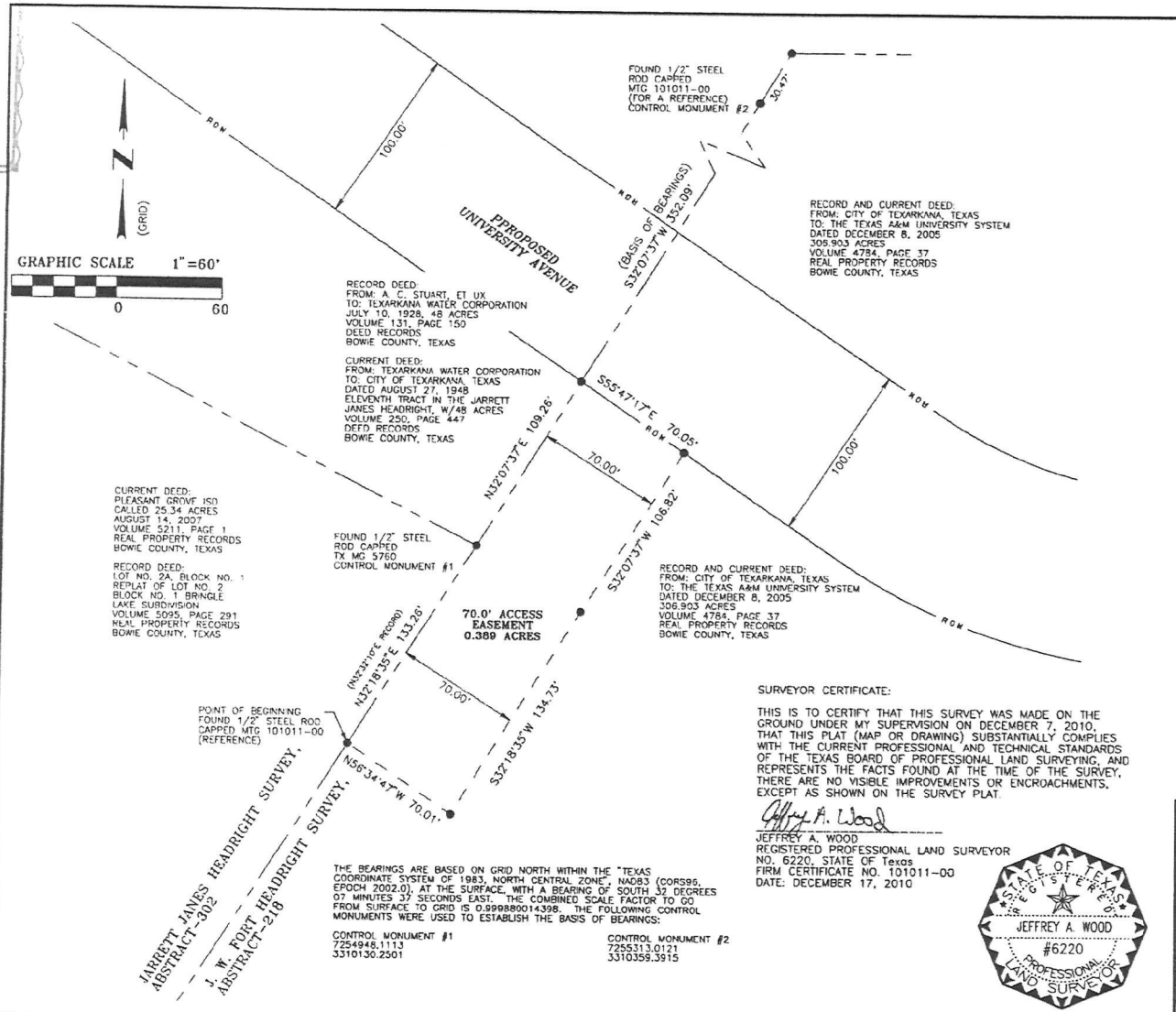

THE BEARINGS ARE BASED ON GRID NORTH WITHIN THE "TEXAS COORDINATE SYSTEM OF 1983, NORTH CENTRAL ZONE", NAD83 (CORS96, EPOCH 2002.0), AT THE SURFACE, WITH A BEARING OF SOUTH 32 DEGREES 07 MINUTES 37 SECONDS EAST. THE COMBINED SCALE FACTOR TO GO FROM SURFACE TO GRID IS 0.999880014398. THE FOLLOWING CONTROL MONUMENTS WERE USED TO ESTABLISH THE BASIS OF BEARINGS:

CONTROL MONUMENT #1
7254948.1113
3310130.2501

CONTROL MONUMENT #2
7255313.0121
3310359.3915

SURVEYOR CERTIFICATE:

THIS IS TO CERTIFY THAT THIS SURVEY WAS MADE ON THE GROUND UNDER MY SUPERVISION ON DECEMBER 7, 2010, THAT THIS PLAT (MAP OR DRAWING) SUBSTANTIALLY COMPLIES WITH THE CURRENT PROFESSIONAL AND TECHNICAL STANDARDS OF THE TEXAS BOARD OF PROFESSIONAL LAND SURVEYING, AND REPRESENTS THE FACTS FOUND AT THE TIME OF THE SURVEY. THERE ARE NO VISIBLE IMPROVEMENTS OR ENCROACHMENTS, EXCEPT AS SHOWN ON THE SURVEY PLAT.

Jeffrey A. Wood

JEFFREY A. WOOD
REGISTERED PROFESSIONAL LAND SURVEYOR
NO. 6220, STATE OF Texas
FIRM CERTIFICATE NO. 101011-00
DATE: DECEMBER 17, 2010

STATE OF TEXAS REGISTERED JEFFREY A. WOOD #6220 PROFESSIONAL LAND SURVEYOR

Property Description
70.0' Access Easement
0.389 Acres
Bowie County, Texas

All that certain lot, tract or parcel of land lying and situated in the J. W. Fort Headright Survey, Abstract 218, Bowie County, Texas, being a part of that certain tract of land described as 306.903 acres in the deed from The City of Texarkana, Texas, to The Texas A&M University System, dated December 8, 2005, recorded in Volume 4784, Page 37 of the Real Property Records of Bowie County, Texas, and being more particularly described by metes and bounds as follows:

BEGINNING at a 1/2 inch steel rod found for a reference, lying in the West line of the said J. W. Fort Survey, the West line of the said 306.903 acre tract, the East line of the Jarrett Janes Headright Survey, Abstract 302, Bowie County, Texas, and the East line of that certain tract of land described as Lot No. 2A, Block No. 1, of the Replat of Lot No. 2, Block No. 1, Bringle Lake Subdivision, a subdivision of a part of the Jarrett Janes Headright Survey, Abstract 302, Bowie County, Texas, according to the plat recorded in Volume 5095, Page 291 of the Real Property Records of Bowie County, Texas;

THENCE North 32 degrees 18 minutes 35 seconds East a distance of 133.26 feet along the West line of the said 306.903 acre tract, the East line of the said Lot No. 2A, the West line of the said J. W. Fort Headright Survey, and the East line of the said Jarrett Janes Headright Survey to a 1/2 inch steel rod found for a corner capped TX MG 5760 (control monument), an angle point in the West line of the said 306.903 acre tract, the Northeast corner of the said Lot No. 2A, the Southeast corner of that certain tract of land described as the Eleventh Tract in the Jarrett Janes Headright, with 48 acres in the deed from Texarkana Water Corporation to the City of Texarkana, Texas, dated August 27, 1948, recorded in Volume 250, Page 447 of the Deed Records of Bowie County, Texas, same being that certain tract of land described as 48 acres in the deed from A. C. Stuart, et ux, to Texarkana Water Corporation, dated July 10, 1928, recorded in Volume 131, Page 150 of the Deed Records of Bowie County, Texas;

THENCE North 32 degrees 07 minutes 37 seconds East a distance of 109.26 feet along the West line of the said 306.903 acre tract, the West line of the said J. W. Fort Headright Survey, the East line of the said Jarrett Janes Headright Survey, and the East line of the said 48 acre tract to a point for a corner, lying in the South right-of-way line of proposed University Avenue, said corner bears South 32 degrees 07 minutes 37 seconds West (basis of bearings) at a distance of 30.47 feet passing a 1/2 inch steel rod found for a reference, capped MTG 101011-00, continuing in all a distance of 352.09 feet from a point for a corner, an angle point for the said 306.903 acre tract;

THENCE South 55 degrees 47 minutes 17 seconds East a distance of 70.05 feet along the South right-of-way line of the said proposed Avenue to a point for a corner;

THENCE South 32 degrees 07 minutes 37 seconds West a distance of 106.82 feet to a point for a corner, at an angle point;

THENCE South 32 degrees 18 minutes 35 seconds West a distance of 134.73 feet to a point for a corner;

THENCE North 56 degrees 34 minutes 47 seconds West a distance of 70.01 feet to the point of beginning and containing 0.389 acres of land, at the time of this survey.

The bearings are based on Grid North within the "Texas Coordinate System of 1983, North Central Zone", NAD83 (CORS96, epoch 2002.0), at the surface, with a bearing of North 87 degrees 27 minutes 33 seconds East.

This description is based on the survey and plat made by Jeffrey A. Wood, Registered Professional Land Surveyor No. 6220, on December 17, 2010.

70.0' ACCESS EASEMENT

0.389 ACRES
BEING A PART OF THE J.W. FORT
HRS, A-218, BOWIE COUNTY, TEXAS

Date	Revision/Description

Drawn By	Checked By	Project No.	Dwg. Date
JW	MG	100015C	12/17/10

MTG engineers & surveyors
5930 SUMMERHILL RD. | P.O. BOX 3788
TEXARKANA TEXAS 75501
P 903.838.8533 | F 903.832.4700
www.mtgengineers.com
©MTG 2010 TBPE NO. 354

File No. | Sheet No.

X:\2010 Projects\100015C- CITY BRINGLE\SURVEYING\WORKING FILES\70 foot easement.dwg
Dec 17, 2010 8:43PM

Exhibit C

Property Description-Tract No. 2
Proposed Sports Complex Right of Way
0.474 Acres
Bowie County, Texas

All that certain lot, tract or parcel of land lying and situated in the J. W. Fort Headright Survey, Abstract 218, Bowie County, Texas, being a part of that certain tract of land described as 306.903 acres in the deed from The City of Texarkana, Texas, to The Texas A&M University System, dated December 8, 2005, recorded in Volume 4784, Page 37 of the Real Property Records of Bowie County, Texas, and being more particularly described by metes and bounds as follows:

BEGINNING at a 1/2 inch steel rod set for a corner capped MTG 101011-00, said corner bears South 27 degrees 34 minutes 18 seconds East (basis of bearings) a distance of 603.98 feet to a 2 inch steel pipe found for a corner (control monument), an angle point in the North line of the said 306.903 acre tract, North 87 degrees 27 minutes 33 seconds East a distance of 233.27 feet, and South 00 degrees 00 minutes 00 seconds West a distance of 125.10 feet from a 1/2 inch steel rod found for a corner capped MTG 101011-00(control monument), an angle point in the North line of the said 306.903 acre tract;

THENCE North 25 degrees 41 minutes 56 seconds East a distance of 100.22 feet to a 1/2 inch steel rod set for a corner capped MTG 101011-00, at an angle point;

THENCE South 60 degrees 37 minutes 36 seconds East a distance of 96.01 feet to a 1/2 inch steel rod set for a corner capped MTG 101011-00, at an angle point;

THENCE South 55 degrees 51 minutes 47 seconds East a distance of 127.24 feet to a 1/2 inch steel rod set for a corner capped MTG 101011-00, at the beginning of a circular curve to the right;

THENCE in a Southwesterly direction along the arc of the said circular curve a distance of 78.93 feet, with a radius of 790.16 feet, a delta angle of 05 degrees 43 minutes 24 seconds, a chord bearing of South 29 degrees 32 minutes 13 seconds West, and a chord distance of 78.90 feet to a 1/2 inch steel rod set for a corner capped MTG 101011-00, at the end of the said circular curve;

THENCE North 65 degrees 23 minutes 25 seconds West a distance of 127.01 feet to a 1/2 inch steel rod set for a corner capped MTG 101011-00, at an angle point;

THENCE North 60 degrees 37 minutes 36 seconds West a distance of 89.59 feet to the point of beginning and containing 0.474 acres of land, more or less.

The bearings are based on Grid North within the "Texas Coordinate System of 1983, North Central Zone", NAD83 (CORS96, epoch 2002.0), at the surface, with a bearing of North 27 degrees 34 minutes 18 seconds West.

This description is based on the survey and plat made by Jeffrey A. Wood,
Registered Professional Land Surveyor No. 6220, on January 29, 2011.

System Real Estate Office
OFFICIAL DOCUMENT

Attachment: Second Addendum Declaration of Gift Agreement (1102 : Ordinance 2014-055 Third Addendum to agreement between TAMU and

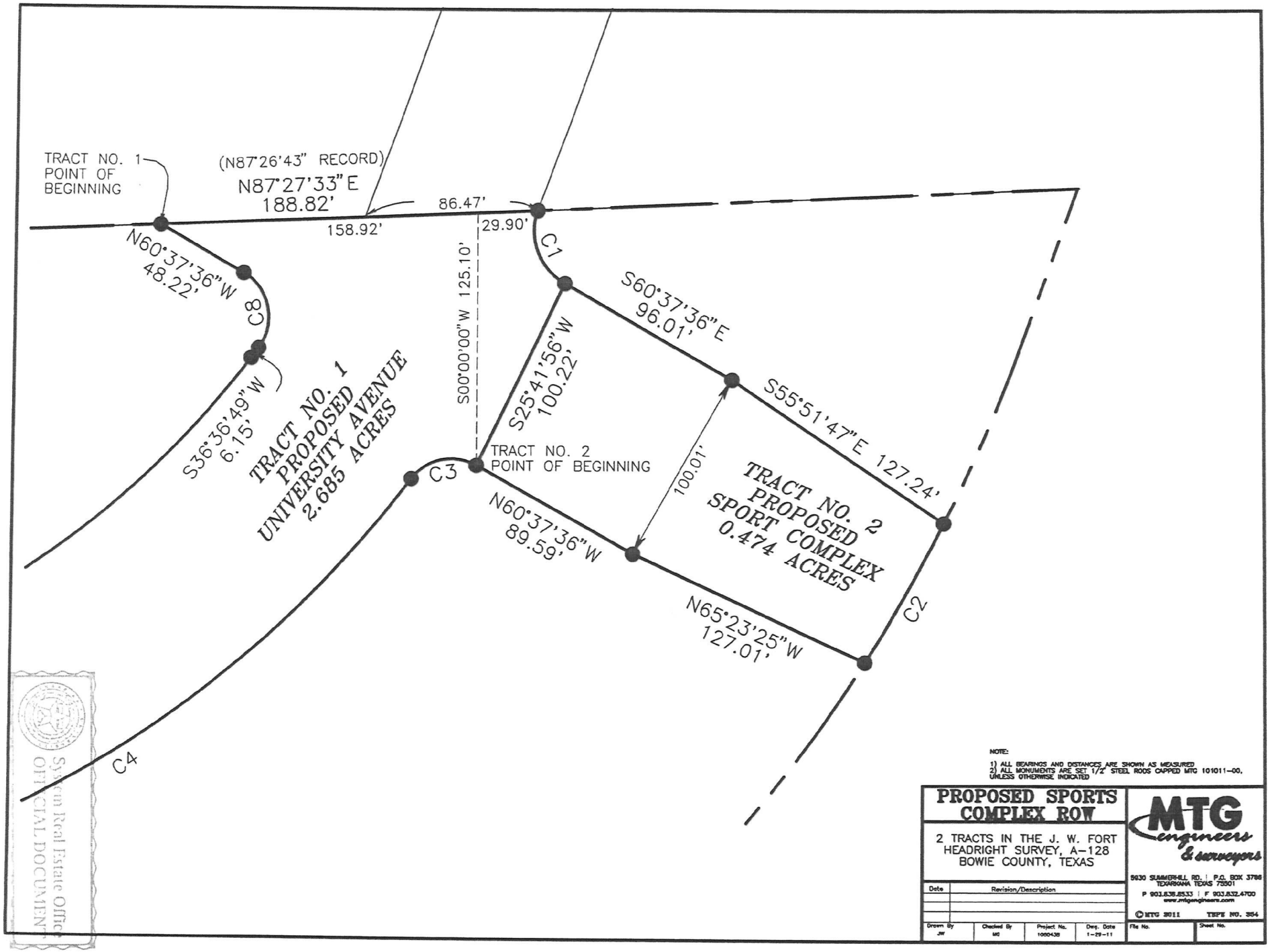

System Real Estate Office
OFFICIAL DOCUMENT

PROPOSED EAGLE DRIVE
PROPOSED BRINGLE LAKE VILLAGE ROAD EXTENSION
GRAPHIC SCALE 1"=200'
0
200

City of Texarkana, Texas

Version: B

Briefing Sheet

Update Date: 5/22/2014 3:21 PM

Lead Department: City Secretary **Action Officer:** Jennifer Evans, City Secretary

Subject: Resolution No. 2014-071 appointing a Mayor Pro Tem for the term beginning June 1, 2014 and ending on May 31, 2015 or until superseded by new council member appointments.

Briefing: 5/27/2014	**Public Hearing:**	**Second Briefing:**	**Council Vote:** 5/27/2014

Item Schedule

Updates/History of Briefing:

NOT APPLICABLE

Executive Summary and Background Information:

Article II, Section 4 of the Texarkana City Charter provides for the office of Mayor Pro Tem, who shall act as Mayor during the absence or disability of the Mayor. The Texarkana City Charter provides for the election of the Mayor Pro Tem by the Council.

Potential Options:

- None
-

Fiscal Implications:

None

Staff Recommendation:

Staff recommends appointment of a Mayor Pro Tem in accordance with the provisions of the City Charter.

Advisory Board/Committee Review:

NOT APPLICABLE

Board/Committee Recommendation:

NOT APPLICABLE

Advisory Board/Committee Meeting Date and Minutes:

NOT APPLICABLE

Attachments

a. Goals and Perspectives (DOCX)

b. Reso. No. 2014-071 Mayor Pro Tem Appt. 060114 (DOC)

Staff Coordination

City Manager	Jennifer Evans	Department Head Review	Completed	05/19/2014 11:20 AM
Public Information Officer	Lisa Thompson	PIO Review	Completed	05/19/2014 11:23 AM
City Manager	John Whitson	City Manager Review	Completed	05/19/2014 11:26 AM
City Council	Jennifer Evans	Meeting	Completed	06/10/2014 6:33 PM

Meeting History

City of Texarkana, Texas

Developing Perspectives and Goals Pending Approval by the City Council:

Perspectives	Goals
Serve the Community	☐ Promote an Environmentally Sensitive & Livable Community ☐ Provide a Safe Community ☐ Deliver Quality Services ☐ Foster a Healthy Community
Run the Operations	☐ Enhance Community Preparedness & Responsiveness ☐ Maximize Partnership Opportunities ☑ Provide Courteous & Responsive Customer Service ☐ Model a Positive City Image ☑ Deliver Efficient Services ☐ Cultivate Community Involvement & Access
Manage the Resources	☐ Maintain Fiscal Strength ☐ Maximize Utilization & Resources ☐ Invest in Infrastructure & Transportation
Develop Personnel	☐ Develop a Skilled & Diverse Workforce ☐ Create a Positive & Rewarding Work Culture

Perspectives and Goals Additional Comments:

NONE

Resource Impact:

Staff time required if item is approved:	Select One By Clicking Here

Other Potential Impacts:

NONE APPLICABLE

Public Information Plan:

☐	Newspaper Notice (Required by Statute)	☐	Public Hearing (Required by Statute)
☐	Public Forum/Input Session	☐	Press Release
☐	E-News Distribution	☐	Website Notice
☐	Social Media (Twitter, Facebook, etc.)	☐	Special Mailing
☐	Flyers Posted	☐	Banners Posted
☐	Survey	☐	Automated Phone Call
☑	None Required	☐	

Other:

Attachment: Goals and Perspectives (1125 : Res. No. 2014-071 Appointment of Mayor Pro Tem)

RESOLUTION NO. 2014 - 071

A RESOLUTION OF THE CITY COUNCIL OF THE CITY OF TEXARKANA, TEXAS, APPOINTING A MAYOR PRO TEM; AND ESTABLISHING AN EFFECTIVE DATE.

WHEREAS, Article II, Section 4 of the Texarkana City Charter provides for the office of Mayor Pro Tem, who shall act as Mayor during the absence or disability of the Mayor; and

WHEREAS, Article II, Section 4 of the Texarkana City Charter also provides for the election of the Mayor Pro Tem by the City Council; and

WHEREAS, the City Council of the City of Texarkana, Texas finds it to be in the best interest of the City to appoint an individual to the office of Mayor Pro Tem in accordance with the provisions of the City Charter; and

WHEREAS, appointment of the Mayor Pro Tem will be effective on June 1, 2014 and will continue until May 31, 2015 or until superseded by new council appointments and therefore at that time electing a Mayor Pro Tem to serve until the first City Council meeting after Election Day in 2016.

NOW, THEREFORE, BE IT RESOLVED BY THE CITY COUNCIL OF THE CITY OF TEXARKANA, TEXAS:

SECTION 1: That in accordance with the terms and provisions of Article II, Section 4 of the Texarkana City Charter, the following individual is hereby elected Mayor Pro Tem:

_____.

SECTION 2: That this appointment will be for the term beginning June 1, 2014 and ending on May 31, 2015 or until superseded by new council member appointments.

SECTION 3: That this Resolution shall be in full force and effect from and after its passage and approval.

PASSED AND APPROVED in Regular Council Session on this the 27th day of May 2014.

ATTEST:

JENNIFER EVANS, CITY SECRETARY	BOB BRUGGEMAN, MAYOR

Attachment: Reso. No. 2014-071 Mayor Pro Tem Appt. 060114 (1125 : Res. No. 2014-071 Appointment of Mayor Pro Tem)

City of Texarkana, Texas

Version: A

Briefing Sheet

Update Date: 5/20/2014 4:21 PM

Lead Department: Purchasing and Contracting **Action Officer:** Sharon Moore, Purchasing Manager

Subject: Resolution No. 2014-056 approving and adopting the Property Policy Manual.

Briefing: 6/23/2014 **Public Hearing:** 6/9/2014 **Second Briefing:** **Council Vote:** 6/23/2014

Item Schedule
Schedule 2: Brief once - vote once (two weeks)

Updates/History of Briefing:

Executive Summary and Background Information:

The City needs to establish a property policy and procedure bringing all property negotiations under the responsibility of one manager and department as determined by the City Manager.

Potential Options:

- Approval to adopt policies and procedures for property sales.
- Denial.

Fiscal Implications:

Additional revenue from property sales and restoration of unproductive properties to the tax roll.

Staff Recommendation:

Council Approval

Advisory Board/Committee Review:

None

Board/Committee Recommendation:

Not Applicable

Advisory Board/Committee Meeting Date and Minutes:

Not Applicable

Attachments

a. Property Policy Manual - final (2) (DOC)
b. 056 Resolution Property Policy Manual (DOC)
c. 2014-056 Goals & Perspectives (DOCX)

City of Texarkana, Texas

Staff Coordination

Finance	Charlie Bassett	Department Head Review	Completed	05/15/2014 11:25 AM
Public Information Officer	Lisa Thompson	PIO Review	Completed	05/15/2014 11:25 AM
City Manager	John Whitson	City Manager Review	Completed	05/16/2014 11:03 AM
City Council	Jennifer Evans	Meeting	Completed	06/10/2014 6:33 PM

Meeting History

Dated: April 30, 2014

PROPERTY POLICY MANUAL

The City's goals include reducing the number of idle properties held and maintained by the City and encouraging the development of an increased supply of single-family homes occupied by owners. The City strives to accomplish these goals by protecting and encouraging neighborhoods, by creating desirable parts of the City for economic development, while maximizing financial return and public good will and minimizing risks and liabilities for the City.

This policy is intended to address the following objectives:

1. Effectively and efficiently set out the guidelines for the sale of City-owned property;
2. Recognize and provide for the different categories of property held by the City;
3. Coordinate the sale of properties
4. Insure that the decisions to sell, hold or dispose of property reflect considered judgment with regard to both the short-term and long-term goals of the City.

II. GENERAL PROVISIONS

A. City-owned properties are administered by the Property Manager and are separated into four categories:

   1. Property For Sale
   2. Housing Program Properties
   3. City Facility Properties
   4. Land Bank Properties

B. A list of properties available for sale shall be created and maintained by the department as determined by the City Manager. Listed properties will fall into either the Properties for Sale (PFS) Program or Housing Program Properties.

Attachment: Property Policy Manual - final (2) [Revision 1] (1098 : Res-2014-056 Adopt Property Policy Manual)

C. All city-owned real property will be sold in accordance with local policy and with any applicable State law including provisions of the Texas Local Government Code, Property Code and Tax Code.

D. The list of available properties is determined by the City's Property Manager. No properties shall be added or removed from the City's overall inventory without prior approval of the Property Manager in consultation with the City Manager and in accordance with this policy.

E. All sales are completed with the execution of a deed stating that the property is sold "AS IS", and sold subject to the prior owner's right of redemption, if any. The City makes no warranty concerning zoning or suitability for any specific purpose or use; and it is the buyer's responsibility to examine all applicable building codes and ordinances to determine if the property in question can be used for the buyer's intended purpose

F. Offers to Purchase property will not be accepted from any Disqualified Buyer. A Disqualified Buyer is anyone with:

1. a delinquent tax account for City, School, College or County Taxing Entities;
2. past due amounts owed to the city for mowing, water bills, library fines, hotel sales tax, abatement of other nuisances by the city or demolition of substandard structures; or
3. in current violation of any city code and/or ordinance related to real estate.

I. The proposed purchase of property by a city employee will be disclosed to the city council and notice will be provided to the public on the agenda published for the city council meeting at which approval of the sale is sought.

J. This policy grants the City Manager, or his/her designee, authority to surplus and sell real property with a selling price up to $5,000.00. Any single transaction exceeding this amount shall be approved by City Council.

K. The policy grants the City Manager, or his/her designee, authority to release liens on City owned property that would otherwise be unsellable.

L. The City shall not accept any donation, gift, trade or purchase of a property which includes an existing structure without obtaining an environmental assessment, including asbestos sampling and obtaining City Council approval prior to acceptance.

Attachment: Property Policy Manual - final (2) [Revision 1] (1098 : Res-2014-056 Adopt Property Policy Manual)

III. DEFINITIONS

A. Adjoining Landowners: Landowners whose property borders the property in question.

B. City-Owned Facility Property: Property that is the site of a city facility or is planned for development as a city facility. This property is not for sale.

C. Exempt Property that cannot be developed independently: Property that is characterized as a narrow strip of land, or land that because of its shape, lack of access to public roads or utilities, or a small area that cannot be developed independently under its current zoning or under applicable subdivision or other development control ordinances.

D. Housing Program Property: Property that has been transferred to the Community Redevelopment and Grants Department (or any other department assigned to manage housing programs' properties) to be sold using one or more of the Housing's Programs. These properties will be sold in accordance with the Community Redevelopment and Grants Department Policies as approved by the city council or the city manager as may be appropriate.

E. PFS Program Properties: Include all sellable properties, which have not been transferred to Housing and Community Development (or other department assigned to manage PFS Program Properties) or have been returned to Property Management to be sold.

F. Land Bank Property: Properties that because of their physical characteristics and/or location have the potential to serve as a catalyst for economic development, protect an important resource, or contribute to the stabilization or revitalization of an area.

G. Minimum Bid: It is the lowest acceptable price set for a specific property.

H. Non-Tax Foreclosed Property: property acquired by the City through a method other than tax foreclosure (i.e. gift, bequest, purchase).

IV. RESPONSIBILITIES OF THE PROPERTY MANAGER

A. The Property Manager shall perform or direct the performance of a variety of tasks associated with the sale, management and oversight of City-owned properties in order to further the City's goals of housing, economic and community development.

B. The responsibilities of the Property Manager shall include the following:

1. Manage and maintain the entire City-owned real property inventory;

Attachment: Property Policy Manual - final (2) [Revision 1] (1098 : Res-2014-056 Adopt Property Policy Manual)

2. Determine the appropriate property category for each property;

3. Serve as the City representative by responding to any public inquiries concerning the available property list;

4. Monitor all public sale processes to ensure that City policies remain consistent;

5. Prepare proposed sale packets for City Council review after an offer of purchase or high bid has been received.

V. PROCEDURES FOR SALE OF CITY OWNED PROPERTY

A. Public Sales

1. Auctions and Sealed Bid Sales - Determining Sale Price

   a. The Property Manager may establish a minimum bid amount at his/her discretion and may increase the minimum bid amount to allow for full or partial recovery of expenses incurred by the city to make the property marketable.

   b. Any costs subject to being included in the minimum bid must be documented in the subject property file as a means of validating the actual expense incurred.

2. The "Request for Bid" will specify:
   a. the address of the property
   b. a minimum bid price for the property;
   c. the date the bids will be opened; and
   d. any restrictions on the property

3. The City may receive, solicit, or negotiate an offer to purchase property and advertise it for upset bids. When an offer is made and the City proposes to accept it, the city shall require the offeror to deposit five percent (5%) of his bid with the City, and shall publish a notice of the offer on the City's website. The notice shall contain a general description of the property, the amount and terms of the offer, and a notice that within 10 days any person may raise the bid by not less than ten percent (10%) of the original offer amount. When a bid is raised, the bidder shall deposit with the City five percent (5%) of the increased bid, and the City shall re-advertise the offer at the increased bid. This procedure shall be repeated until no further qualifying upset bids are received, at which time the City may accept the offer and sell the property to the highest bidder. The City may at any time reject any and all offers. The rules of this section may be applied at the City's discretion, regardless of the original bid amount.

Attachment: Property Policy Manual - final (2) [Revision 1] (1098 : Res-2014-056 Adopt Property Policy Manual)

4. The successful bidder must pay the total amount of the bid offered to the City within five business days following the award. Payment must be cash, personal check, certified check or cashiers check made payable to the City of Texarkana.

5. If payment is not made in the prescribed time, the first place bid will be disqualified and the second place bid accepted, with that bidder having an equal amount of time to tender payment.

B. Right to Decline to Sell

Regardless of the sale method, the Property Manager is authorized to decline to sell a property in the event he/she has plausible reason to believe the interested buyer may be attempting to circumvent City of Texarkana policy related to property sale or buyer use. There exists the potential for a Disqualified Buyer to acquire a property by having another individual buy it and then sell it to the Disqualified Buyer. (see Disqualified Buyer in General Provision Item I.). Example: An interested buyer owes past due taxes. A second party may purchase the property and later sell it to the Disqualified Buyer. This type of sale is prohibited by this policy.

VI. HOUSING AND COMMUNITY DEVELOPMENT

A. Community Redevelopment and Grants Department administers programs for the construction of residences. The programs are designed to achieve the City of Texarkana's goals to stabilize and revitalize our neighborhoods' aging stock through high quality rehabilitation and reconstruction. In addition, there are new construction and acquisition assistance programs available for a variety of housing needs. These housing programs will create housing opportunities to address the entire spectrum of citywide needs including homelessness, special needs, affordable housing and upper scale developments.

B. Returned Housing Properties: In the event a property cannot be sold through a Housing and Community Development program within a 6 month period, it may be returned to the City's available property list. The minimum sale price for these properties may be set by the Property Manager with approval from the City Manager. Properties may be sold for:

1. General Ownership and Neighborhood Improvement requiring buyer to execute a Disclaimer and Conditions of Sale Agreement included in bid document.

Attachment: Property Policy Manual - final (2) [Revision 1] (1098 : Res-2014-056 Adopt Property Policy Manual)

Dated: April 30, 2014

SAMPLE BID DOCUMENT

SUBMIT TO: CITY OF , TEXARKANA GENERAL SERVICES DIVISION MAILING ADDRESS: P O BOX 1967 TEXARKANA, TEXAS 75504 EXPRESS MAIL ADDRESS: 220 TEXAS BLVD TEXARKANA, TEXAS 75501	***CITY OF TEXARKANA*** **INVITATION TO BID**
CONTACT PERSON: **Sharon Moore**	
TEL: 903–798-3976 FAX: 903-798-3922 moores@txkusa.org	

TITLE: **Sale of City Owned Property** **1234 Longhorn Way, Texarkana, Texas**	NUMBER: **13-0000-14**	SUBMITTAL DEADLINE: **March 14, 2013 @ 2:00 PM CST**
PRE BID DATE, TIME AND LOCATION: **NONE**		*SUBMITTALS RECEIVED AFTER ABOVE DATE AND TIME WILL NOT BE CONSIDERED*

Enter Respondent Name:

Enter Mailing Address:

Enter the following information:

Telephone Number: *( )_____ - _____*

Fax Number: *( )_____ - _____*

Email Address: _____

Federal Tax ID Number or Social Security Number

IN COMPLIANCE WITH THIS SOLICITATION, THE UNDERSIGNED BIDDER HAVING EXAMINED THE INVITATION TO BID AND SPECIFICATIONS, AND BEING FAMILIAR WITH THE CONDITIONS TO BE MET, HEREBY SUBMITS THE FOLLOWING BID FOR FURNISHING THE MATERIAL, EQUIPMENT, LABOR AND EVERYTHING NECESSARY FOR PROVIDING THE ITEMS LISTED ON THE ATTACHED BID FORM AND AGREES TO DELIVER SAID ITEMS AT THE LOCATIONS AND FOR THE PRICES SET FORTH ON THE BID FORM. AN INDIVIDUAL AUTHORIZED TO BIND THE COMPANY MUST SIGN THE FOLLOWING SECTION. FAILURE TO EXECUTE AND SIGN THIS PORTION MAY RESULT IN BID REJECTION.

_____ _____
Authorized Signature **Title**

_____ _____
Print/Type Name **Date**

THIS FORM MUST BE COMPLETED AND RETURNED WITH YOUR RESPONSE.

Attachment: Property Policy Manual - final (2) [Revision 1] (1098 : Res-2014-056 Adopt Property Policy Manual)

Dated: April 30, 2014

BID FORM

	Description	Quantity	Unit	Bid Amount
1	Sale of City owned Property: Location: 1234 Longhorn Way Texarkana, Tx. Legal: Ghios Addition, S60', Lots 7, 8, 5911/042 09/22/10 .14 Acres, PIDN: 19785, Account No. 08460006800 Minimum Bid Requirement: $10,000.00 Bid shall comply with all attached requirements for submitting bid.	1	LOT	$

THIS FORM MUST BE COMPLETED AND RETURNED WITH YOUR RESPONSE.

Attachment: Property Policy Manual - final (2) [Revision 1] (1098 : Res-2014-056 Adopt Property Policy Manual)

Dated: April 30, 2014

PART I
GENERAL CONDITIONS

****** PLEASE READ CAREFULLY ******

THESE GENERAL CONDITIONS APPLY TO ALL BIDS AND BECOME A PART OF THE TERMS AND CONDITIONS OF ANY BID SUBMITTED AND SUBSEQUENT PURCHASE ORDER OR CONTRACT. THE CITY SHALL MEAN THE CITY OF TEXARKANA, TEXAS.

1. **REQUIRED INFORMATION:** The bid form section of the bid packet must be completed prior to the date and time set for the bid opening and included with the bid packet or the vendor will be found non-responsive.

2. **INSTRUCTIONS:** These instructions apply to all quotations and become a part of terms and conditions of any bid packet submitted and subsequent purchase order or contract.

3. **AWARD:** The City of Texarkana, Texas reserves the right to accept or reject any and all bids in whole or in part and waive any minor technicality and enter into contract deemed to provide the **best value** to the City.

3.1 The contract may be awarded either to the highest responsible bidder or to the bidder who provides development services at the best value for the City. In determining the best value for the City, the City may consider:

(a) The purchase price;

(b) The reputation and development experience of the bidder;

(c) The quality of the bidder's development and/or construction;

(d) The extent to which the development and/or construction meet the City's community and economic development needs;

(e) The bidder's past relationship with the City; including zoning and code compliance related to construction, livability, and maintenance (property owners whose current inventory of properties includes condemned, abandoned, red-tagged, or, in the assessment of the City substandard properties, and/or holding property with liens are not eligible to bid, until or unless all properties are brought into compliance with relevant building and property maintenance codes and all liens are cleared;

(f) The impact on the ability of the City to comply with laws and rules relating to contracting with Historically Underutilized Businesses and non-profit organizations employing persons with disabilities;

(g) The total long-term cost for the City, and

(h) Any relevant criteria specifically listed in the Invitation to Bid.

3.2 All bids are evaluated for compliance with specifications before the bid price is considered. Failure to comply with the listed General Conditions may result in disqualification of bid.

3.3 In case of tie bids, preference will be given to local bidders that meet all other established criteria.

Responsible Bidder Criteria: The City shall consider only responsible Bidders. Responsible Bidders are those that have, in the sole judgment of the City, the financial ability, experience, resources, skills, capability, reliability and business integrity necessary to perform the requirements of the contract. The City may also consider references, tenant complaints and financial stability in determining a responsible Bidder.

Attachment: Property Policy Manual - final (2) [Revision 1] (1098 : Res-2014-056 Adopt Property Policy Manual)

4. **ASSIGNMENT:** The successful bidder shall not sell, assign, transfer or convey this contract in whole, or part, without the prior written consent of the City Manager or his/her designee.

5. **LATE BIDS:** Bid packets received after submission deadline shall be returned unopened and will be considered void and unacceptable. The City is not responsible for the lateness of mail carrier, weather conditions, etc.

6. **ALTERING BIDS**: Bid prices cannot be altered or amended after submission deadline. Any interlineation alteration or erasure made before opening time must be initialed by the signer of the bid, guaranteeing authenticity.

7 **WITHDRAWAL OF BIDS**: A bid price may not be withdrawn or canceled by the bidder for a period of ninety (90) days following the date designated for the receipt of bids without written approval of the City Manager or his/her designee, and bidder so agrees upon submittal of bid.

8. **CHANGE ORDERS**: No oral statement of any person shall modify or otherwise change, or affect the terms, conditions or specifications stated in the resulting contract. All change orders to the contract will be made in writing by the City of Texarkana, Texas.

9**.** **ADDENDA**: Any interpretations, corrections or changes to this bid packet will be made by addenda. Sole issuing authority shall be vested in the City of Texarkana, Texas City Manager or his/her designee. Addenda will be sent to all who are known to have received a copy of this bid packet. If the addenda contain changes to the "specification" or "bid form", bidders shall acknowledge receipt of all addenda or they will be declared non-responsive.

10. **INDEMNIFICATION AGREEMENT:** Contractor, for itself and its agents, employees and subcontractors, shall defend, indemnify, and hold the City, its officers, agents, employees, contractors, elected officials, legal representatives, successors and assigns (collectively the "City"), harmless form all liability, suits, causes of action, lawsuits, judgments, claims, damages, penalties, fines, costs, fees or expenses, including attorneys fees and costs of defense, for any environmental issues contained within or on the property, injury to or the death of any person or damage to or destruction of any property arising out of or resulting from or based upon, in whole or part, any act or omission of contractor, its officers, employees, contractors, subcontractors and agents under this contract.

11. Property is sold "AS IS" and bidder assumes all responsibility for condition of property including but not limited to environmental issues, liens, removal or eviction of occupants and their possessions, and materials, fixtures, vehicles, debris, and rubbish, on property at time of bid.

12. **TERMINATION FOR DEFAULT**: The City reserves the right to enforce the performance of this contract in any manner prescribed by law or deemed to be in the best interest of the City in the event of breach or default of this contract. The City reserves the right to terminate the contract immediately in the event the successful bidder fails to perform in accordance with these specifications.

13. **VENUE:** This agreement will be governed and constructed according to the laws of the State of Texas. This agreement is performable in Bowie County, Texas.

14. **NO PROHIBITED INTEREST:** Bidder acknowledges and represents that they are aware of the laws, City charter, and City code of conduct regarding conflicts of interest. The City charter states that "no officer or employee of the City shall have a financial interest, direct or indirect, in any contract with the City, nor shall be financially interested, directly or indirectly, in the sale to the City of any land, or rights or interest in any land, materials, supplies or service".

15. **PREPARATION COST:** The City will not be liable for any costs associated with the preparation, transmittal, or presentation of any proposals or materials submitted in response to any bid, quotation,

Attachment: Property Policy Manual - final (2) [Revision 1] (1098 : Res-2014-056 Adopt Property Policy Manual)

or proposal. Bidder assumes all cost associated with the transfer of property, including but not limited to surveys. Any desired property studies or reports, title searches and closing costs.

16. **MINOR DEFECT:** The City reserves the right to waive any minor defect, irregularity, or informality in any bid. The City may also reject any or all bids without cause prior to award.

17. **BID OPENINGS:** All bids submitted will be read at the City's regularly scheduled bid opening for the designated project. However, the reading of a bid at bid opening should not be construed as a comment on the responsiveness of such bid or as any indication that the City accepts such bid as responsive. The City will make a determination as to the responsiveness of bids submitted based upon compliance with all applicable laws, City of Texarkana, Texas project documents, including but not limited to the project specifications and contract documents. The City will notify the successful bidder upon award of the contract and, according to state law; all bids received will be available for inspection at that time.

18. **FORCE MAJEURE:** Neither party shall be held responsible for losses or damages hereunder, if the fulfillment of any terms of provisions of the contract is delayed or prevented by strike, walkouts, acts of god, or public enemy, fire, or flood.

19. **CONFLICT OF INTEREST:** The bidder shall not offer or accept gifts or anything of value nor enter into any business arrangement with any employee, official or agent of the City of Texarkana, Texas. By signing and executing this bid, the bidder certifies and represents to the City the bidder has not offered, conferred or agreed to confer any pecuniary benefit or other thing of value for the receipt of special treatment, advantage, information, recipient's decision, opinion, recommendation, vote or any other exercise of discretion concerning this bid.

20. **PERMITS:** Successful bidder is responsible for obtaining any and all City permits the construction or renovation/remolding job requires within 90 days of property acquisition. Bidder agrees to keep all permits current through construction period. Bidder agrees to complete construction within 365 days of property acquisition. Bidder agrees property will not be occupied until the City issues a Certificate of Occupancy. Renovation and new construction will be conducted in accordance with City specifications, code, ordinances, and applicable State and Federal laws.

21. **DEMOLITION:** If demolition is required or to be performed on the property the successful bidder agrees to obtain a demolition permit within 90 days of property acquisition and to maintain the permit until completion project. Bidder agrees to demolish the property and remove all debris from the site within 180 days of property acquisition. Demolition will be conducted in accordance with City specifications, code, ordinances, and applicable State and Federal laws.

22. **TRANSFER OF PROPERTY**: Owner agrees to hold property for minimum of 12 months. Exception: If the property is issued a Certificate of Occupancy prior to the expiration of the 12 month ownership requirement, the owner may sell the property to another buyer. The City at its discretion may accept the property back from the owner should the owner believe they would not be able to complete the project within the specified time frames. All costs associated with the transfer of the property back to the City will be borne by the owner.

23. **ZONING:** All modifications to property or new construction on property must comply with City of Texarkana Texas neighborhood design and zoning requirements and guidelines.

Attachment: Property Policy Manual - final (2) [Revision 1] (1098 : Res-2014-056 Adopt Property Policy Manual)

Dated: April 30, 2014

Part II
ADDITIONAL CONDITIONS

The following are additional conditions to the award of any bid:

A. The successful bidder will provide the full name of the purchaser as it should appear in an instrument of conveyance

B. The property shall be sold **"AS IS".**

C. The successful bidder shall pay for all costs associated with conveyance of title including, but not limited to, attorney's fees, title insurance, filling fees, etc.

D. The attached "Deed Without Warranty" is the instrument the City will use to convey the tract of land.

E. No City employee shall have a direct or indirect financial interest in any contract with the City, or be directly or indirectly financially interested in the sale of land, materials, supplies or services to the City.

F. Effective January 1, 2006, Chapter 176 of the Texas Local Government Code requires that any vendor or person considering doing business with a local government entity disclose in the Questionnaire Form CIQ, the vendor or person's affiliation or business relationship that might cause a conflict of interest with a local government entity. By law, this questionnaire must be filed with the records administrator of the City of Texarkana not later than the 7th business day after the date the person becomes aware of facts that require the statement to be filed. See Section 176.006, Local Government Code. A person commits an offense if the person violates Section 176.006, Local Government Code. An offense under this section is a Class C misdemeanor. Chapter 176 and the questionnaire may be found at http://www.ci.texarkana.tx.us/departments/purchasing/conflict-of-interest.html. By submitting a response to this request, vendor represents that it is in compliance with the requirements of Chapter 176 of the Texas Local Government Code.

Attachment: Property Policy Manual - final (2) [Revision 1] (1098 : Res-2014-056 Adopt Property Policy Manual)

Dated: April 30, 2014

Disclaimers and Conditions of Sale Agreement

RETURN THIS FORM WITH BID

I, _____, as bidder and potential buyer of the property located at _____**,** do hereby agree and accept that this transaction is contingent upon the following terms and conditions:

Disclaimers

a. the property is being sold on an "AS IS" basis;

b. the City of Texarkana makes no warranty concerning zoning or suitability of the property for any specific purpose or use;

c. Property is sold "**AS IS**" bidder assumes all responsibility for condition of property including but not limited to environmental issues, liens, removal or eviction of occupants and their possessions, and materials, fixtures, vehicles, debris, and rubbish, on property at time of bid;

d. it is buyer's responsibility to examine all applicable building codes and ordinances to determine if the property in question can be used for buyer's intended purpose. All modifications to property or new construction on property must comply with City of Texarkana Texas neighborhood design and zoning requirements and guidelines

e. if the property being purchased includes a structure and the condition of that structure is in violation of any construction and building codes, all violations and deficiencies must be repaired/renovated in strict adherence with the procedures and timelines specified in the related Code Inspection Condition Report. **No work can begin until the property has been legally conveyed to the Buyer and appropriate permits are issued.**

Conditions

a. the buyer must, at all times, maintain the property at or above all City Code Standards;

b. the buyer may not sell this property until the property has been demolished and cleared, renovation, or new construction has been completed in accordance with City specifications, code, ordinances, and applicable State and Federal laws. Failure of the buyer to fully comply may, at the city's sole discretion, result in additional compensation to be paid by buyer to the city equal to 50% of the initial purchase price and any profit realized from the prohibited re-sale shall be paid to the city as a penalty for breach of terms and conditions of the initial sale.

c. in the event, at any time, the buyer elects to build a structure on the purchased property, the buyer acknowledges that such structure must be compatible with the neighborhood character and style of other structures located in the same block and must be formally approved in advance by the related City of Texarkana inspections and/or plan review departments in accordance with city ordinances.

Agreed and Accepted:

_____ _____

Bidder's Name Date

Attachment: Property Policy Manual - final (2) [Revision 1] (1098 : Res-2014-056 Adopt Property Policy Manual)

Dated: April 30, 2014

This document will be executed by the successful bidder.
DEED WITHOUT WARRANTY

STATE OF TEXAS §
§ **KNOW ALL BY THESE PRESENTS: COUNTY OF**
BOWIE §

That the City of Texarkana, Texas, a Texas home-rule municipality ("Grantor"), for and in consideration of _____ dollars and _____cents **($0.00)** and other good and valuable consideration to Grantor, the receipt and sufficiency of which is hereby acknowledged, paid in hand by the_____ , ("Grantee"), has **GRANTED, SOLD AND CONVEYED,** and by these presents does **GRANT, SELL AND CONVEY** unto Grantee all that certain lot, tract, or parcel of land situated in the County of Bowie, State of Texas, and more particularly described in bid documents xx-xxxx-xx attached hereto and incorporated herein by reference (the "Land");

Location: 1234 Longhorn Way, Texarkana, Tx.

Legal: Ghios Addition, S60', Lots 7, 8, 5911/042 09/22/10
.14 Acres, PIDN: 19785, Account No. 08460006800

City of Texarkana, Bowie County, Texas

THIS DEED IS MADE WITHOUT WARRANTY, EXPRESS OR IMPLIED, AND GRANTOR EXPRESSLY DISCLAIMS, EXCEPTS AND EXCLUDES ANY AND ALL WARRANTIES OF TITLE OR OTHERWISE FROM THIS CONVEYANCE, INCLUDING - WITHOUT LIMITATION - ANY WARRANTIES ARISING UNDER COMMON LAW OR UNDER SECTION 5.023 OF THE TEXAS PROPERTY CODE OR OTHER STATUTE. BY ACCEPTANCE OF THIS DEED, GRANTEE ACKNOWLEDGES THAT THE LAND IS CONVEYED "AS IS - WHERE IS, WITH ALL FAULTS".

TO HAVE AND TO HOLD the Land, together with all and singular the rights and appurtenances thereto and in anywise belonging unto Grantee, his heirs, successors and assigns forever; **WITHOUT WARRANTY AND SUBJECT IN ALL RESPECTS TO THE DISCLAIMERS SET FORTH ABOVE.**

EXECUTED this the_____ day of _____ , 20___

GRANTOR:

CITY OF TEXARKANA, TEXAS

_____

CITY MANAGER

Attachment: Property Policy Manual - final (2) [Revision 1] (1098 : Res-2014-056 Adopt Property Policy Manual)

Dated: April 30, 2014

ACKNOWLEDGMENT

STATE OF TEXAS **§ §**
COUNTY OF BOWIE **§**

This instrument was acknowledged before me on the _____ day of

_____, 20_____, by _____, City Manager of the City of

Texarkana, Texas, on behalf of the City.

GIVEN UNDER MY HAND AND SEAL OF OFFICE this the _____day of _____, 20___.

_____

Notary Public in and for the State of Texas

Attachment: Property Policy Manual - final (2) [Revision 1] (1098 : Res-2014-056 Adopt Property Policy Manual)

RESOLUTION NO. 2014 - 056

A RESOLUTION OF THE CITY COUNCIL OF THE CITY OF TEXARKANA, TEXAS, APPROVING AND ADOPTING THE PROPERTY POLICY MANUAL; AND ESTABLISHING AN EFFECTIVE DATE.

WHEREAS, the Property Policy Manual has been formulated by staff to be used by the Property Manager appointed by the City Manager when buying and selling City property; and

WHEREAS, Finance, Purchasing, and Community Redevelopment and Grants staff participated in the establishment of policies and procedures set forth in the Property Policy Manual; and

WHEREAS, the City Council of the City of Texarkana, Texas, finds it to be in the best interest of the City to approve and adopt the proposed Property Policy Manual;

NOW, THEREFORE, BE IT RESOLVED BY THE CITY COUNCIL OF THE CITY OF TEXARKANA, TEXAS:

SECTION 1: The staff-recommended proposed Property Policy Manual is hereby approved and adopted in its entirety to read as set forth in the attached document.

SECTION 2: That this Resolution shall be in full force and effect from and after its passage and approval.

PASSED AND APPROVED in Regular Council Session on this the 23rd day of June, 2014.

ATTEST:

_____ _____

JENNIFER EVANS, CITY SECRETARY BOB BRUGGEMAN, MAYOR

Attachment: 056 Resolution Property Policy Manual [Revision 2] (1098 : Res-2014-056 Adopt Property Policy Manual)

City of Texarkana, Texas

Developing Perspectives and Goals Pending Approval by the City Council:

Perspectives	Goals
Serve the Community	☐ Promote an Environmentally Sensitive & Livable Community ☐ Provide a Safe Community ☑ Deliver Quality Services ☐ Foster a Healthy Community
Run the Operations	☐ Enhance Community Preparedness & Responsiveness ☐ Maximize Partnership Opportunities ☑ Provide Courteous & Responsive Customer Service ☐ Model a Positive City Image ☑ Deliver Efficient Services ☐ Cultivate Community Involvement & Access
Manage the Resources	☐ Maintain Fiscal Strength ☑ Maximize Utilization & Resources ☐ Invest in Infrastructure & Transportation
Develop Personnel	☐ Develop a Skilled & Diverse Workforce ☐ Create a Positive & Rewarding Work Culture

Perspectives and Goals Additional Comments:

None

Resource Impact:

Staff time required if item is approved:	Medium

Other Potential Impacts:

Additional revenue from property sales and restoration of properties to tax roll.

Public Information Plan:

☑	Newspaper Notice (Required by Statute)	☑	Public Hearing (Required by Statute)
☐	Public Forum/Input Session	☐	Press Release
☐	E-News Distribution	☐	Website Notice
☐	Social Media (Twitter, Facebook, etc.)	☐	Special Mailing
☐	Flyers Posted	☐	Banners Posted
☐	Survey	☐	Automated Phone Call
☐	None Required	☐	

Other:

Attachment: 2014-056 Goals & Perspectives (1098 : Res-2014-056 Adopt Property Policy Manual)

City of Texarkana, Texas

Version: N

Briefing Sheet

Update Date: 5/29/2014 9:02 AM

Lead Department:	Community Redevelopment and Grants	**Action Officer:**	Craig Lindholm, Executive Director of CRG
Subject:	Resolution No. 2014-060 adopting the 2014 HUD Program Year City of Texarkana Community Development Block Grant Action Plan.		

Briefing:	6/23/2014	**Public Hearing:**	6/9/2014	**Second Briefing:**	June 23, 2014	**Council Vote:**	7/14/2014

Item Schedule

Schedule 1: Brief twice - vote once (six weeks)

Updates/History of Briefing:

(5/12/2014): NOT APPLICABLE

Executive Summary and Background Information:

City Council approval of CDBG Grant funding and City funding priorities for the HUD 2014 Program Year Community Development Block Grant Annual Action Plan.

Potential Options:

- None
-

Fiscal Implications:

CDBG 2014 Grant Award $311,632 plus $20,000 in anticipated program income.

Staff Recommendation:

Recommend Approval

Advisory Board/Committee Review:

None

Board/Committee Recommendation:

NOT APPLICABLE

Advisory Board/Committee Meeting Date and Minutes:

NOT APPLICABLE

Attachments

a. Goals & Perspectives (DOCX)
b. RESOLUTION NO. 2014-060 2014 CDBG Action Plan (DOCX)
c. Presentation 2014 CDBG Action Plan Final (PPTX)

City of Texarkana, Texas

Staff Coordination

Community Redevelopment and Grants	Craig Lindholm	Department Head Review	Completed	05/20/2014 6:52 AM
Public Information Officer	Lisa Thompson	PIO Review	Completed	05/20/2014 6:54 AM
Finance	Charlie Bassett	Review	Completed	05/20/2014 12:19 PM
City Manager	Jennifer Evans	City Manager Review	Skipped	05/27/2014 9:13 PM
City Council	Jennifer Evans	Meeting	Completed	06/10/2014 6:33 PM

Meeting History

City of Texarkana, Texas

Developing Perspectives and Goals Pending Approval by the City Council:

Perspectives		Goals
Serve the Community	☑	Promote an Environmentally Sensitive & Livable Community
	☑	Provide a Safe Community
	☑	Deliver Quality Services
	☑	Foster a Healthy Community
Run the Operations	☐	Enhance Community Preparedness & Responsiveness
	☐	Maximize Partnership Opportunities
	☐	Provide Courteous & Responsive Customer Service
	☑	Model a Positive City Image
	☐	Deliver Efficient Services
	☑	Cultivate Community Involvement & Access
Manage the Resources	☑	Maintain Fiscal Strength
	☑	Maximize Utilization & Resources
	☑	Invest in Infrastructure & Transportation
Develop Personnel	☐	Develop a Skilled & Diverse Workforce
	☐	Create a Positive & Rewarding Work Culture

Perspectives and Goals Additional Comments:

Annual CDBG Entitlement Grant and Annual Action Plan with priorities established to address the needs of the low and moderate income residents in our community.

Resource Impact:

Staff time required if item is approved:	High

Other Potential Impacts:

NONE APPLICABLE

Public Information Plan:

☑	Newspaper Notice (Required by Statute)	☑	Public Hearing (Required by Statute)
☑	Public Forum/Input Session	☐	Press Release
☐	E-News Distribution	☑	Website Notice
☑	Social Media (Twitter, Facebook, etc.)	☐	Special Mailing
☐	Flyers Posted	☐	Banners Posted
☐	Survey	☐	Automated Phone Call
☐	None Required	☐	

Other:

Attachment: Goals & Perspectives (1105 : Res. No. 2014-060 2014 CDBG Action Plan)

RESOLUTION NO. 2014-060

A RESOLUTION OF THE CITY COUNCIL OF THE CITY OF TEXARKANA, TEXAS, ADOPTING THE COMMUNITY DEVELOPMENT BLOCK GRANT PROGRAM 2014 ONE YEAR ACTION PLAN SETTING ANNUAL PROGRAM AND FUNDING PRIORITIES FOR THE USE OF 2014 COMMUNITY DEVELOPMENT BLOCK GRANT FUNDS IN AN AMOUNT NOT TO EXCEED THREE HUNDRED THIRTY-ONE THOUSAND SIX HUNDRED THIRTY-TWO AND NO/100 DOLLARS ($331,632.00) INCLUDING PROGRAM INCOME OF TWENTY THOUSAND AND NO/100 DOLLARS ($20,000.00); AUTHORIZING THE CITY MANAGER TO SUBMIT SAID ACTION PLAN TO THE U.S. DEPARTMENT OF HOUSING AND URBAN DEVELOPMENT; AND ESTABLISHING AN EFFECTIVE DATE.

WHEREAS, the U. S. Department of Housing and Urban Development has provided the City of Texarkana, Texas with Community Development Block Grant (CDBG) funds; and

WHEREAS, public review of the draft 2014 Action Plan was available between May 23, 2014 to June 23, 2014; legal notice for two public hearings were published in the Texarkana Gazette and City website; and public hearings were conducted on May 23, 2014 and June 9, 2014 to solicit public comments regarding the 2014 Action Plan; and

WHEREAS, the City Council has determined it to be appropriate to adopt the 2014 Action Plan for the Community Development Block Grant Funds;

NOW, THEREFORE, BE IT RESOLVED BY THE CITY COUNCIL OF THE CITY OF TEXARKANA, TEXAS:

SECTION 1: That the 2014 Action Plan for the Community Development Block Grant program utilizing CDBG funds in an amount not to exceed THREE HUNDRED THIRTY-ONE THOUSAND SIX HUNDRED THIRTY-TWO AND NO/100 DOLLARS ($331,632.00) including program income of TWENTY THOUSAND AND NO/100 DOLLARS ($20,000.00) is hereby accepted.

SECTION 2: That the City Manager is hereby authorized to submit said 2014 Action Plan to the U. S. Department of Housing and Urban Development and is authorized to act in connection with the submission of the 2014 Action Plan not later than August 15, 2014 and to provide such additional information as may be required.

SECTION 3: That this Resolution shall be in full force and effect from and after its passage and approval.

PASSED AND APPROVED in Regular Council Session on this the 14th day of July, 2014.

ATTEST:

_____ _____

JENNIFER EVANS, CITY SECRETARY BOB BRUGGEMAN, MAYOR

Attachment: RESOLUTION NO. 2014-060 2014 CDBG Action Plan [Revision 8] (1105 : Res. No. 2014-060 2014 CDBG Action Plan)

CITY OF TEXARKANA TEXAS

City Council Presentation

Initial Briefing HUD PY 2014 - 2015: Community Development Block Grant

Attachment: Presentation 2014 CDBG Action Plan Final [Revision 2] (1105 : Res. No. 2014-060 2014 CDBG

Consolidated Plan – Strategic Plan

- The Consolidated Plan is a five-year comprehensive Strategic Plan and it contains information on:
  - housing conditions
  - housing services and programs
  - market conditions
  - community development issues
  - broad priorities and objectives for housing and community development
- Information concerning these areas is obtained through comprehensive assessments of community needs and is used to establish community priorities.

Consolidated Plan Process

- Consultations
- Public input from community meetings, surveys, public hearings, mailings, etc.
- Data collection and analysis
- Housing market analysis
- Prioritization and strategic planning
- Submission to HUD
- HUD approval and fund allocation

A Five-Year Planning Approach
Consolidated Plan Target Areas

- Affordable Housing
- Homelessness Assistance
- Community Development
- Economic Development

Consolidated Plan/Annual Action Plans

- Annual Action Plan:
  - List of specific actions, programs, and projects
  - Links to goals in the Consolidated Plan
  - Projects selected to implement Consolidated Plan
  - Resources expected to be available
  - Types of activities offered
  - Geographic distribution of funds; and
  - Performance measurements

Citizen Participation

Consolidated Plan

- 5 Community Meetings
- 2 Public Hearings
- Newspaper & Website
- 30 day public comment period

Annual Action Plan

- 2 Public Hearings
- Newspaper and Website
- 30 day public comment period

Attachment: Presentation 2014 CDBG Action Plan Final [Revision 2] (1105 : Res. No. 2014-060 2014 CDBG

2014 CDBG Action Plan Resolution 2014 – 060

May 17th , 18th & 19th

June 6th , 7th & 8th

Notice of comment period and public hearings published in Texarkana Gazette and on city website

May 23rd and June 23rd-

Public Hearings

May 23rd – June 23rd

Public comment period is open

May 27th

First Briefing for Council

June 9th

Second Briefing for Council

June 23rd

Public Hearing before Council

July 14th

Council votes

Attachment: Presentation 2014 CDBG Action Plan Final [Revision 2] (1105 : Res. No. 2014-060 2014 CDBG

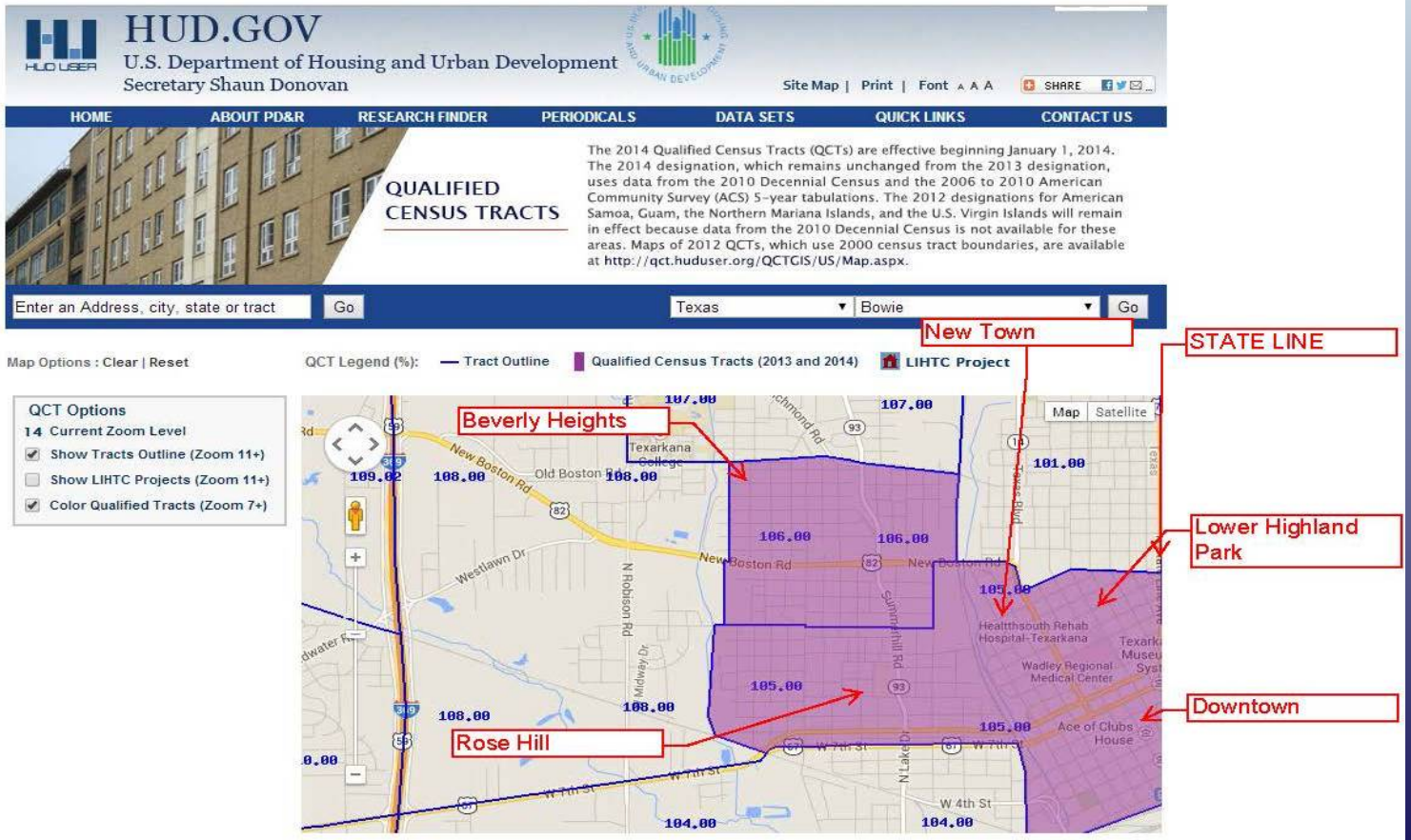
HUD.GOV
U.S. Department of Housing and Urban Development
Secretary Shaun Donovan
Site Map | Print | Font A A A
SHARE
HOME
ABOUT PD&R
RESEARCH FINDER
PERIODICALS
DATA SETS
QUICK LINKS
CONTACT US
QUALIFIED CENSUS TRACTS
The 2014 Qualified Census Tracts (QCTs) are effective beginning January 1, 2014. The 2014 designation, which remains unchanged from the 2013 designation, uses data from the 2010 Decennial Census and the 2006 to 2010 American Community Survey (ACS) 5-year tabulations. The 2012 designations for American Samoa, Guam, the Northern Mariana Islands, and the U.S. Virgin Islands will remain in effect because data from the 2010 Decennial Census is not available for these areas. Maps of 2012 QCTs, which use 2000 census tract boundaries, are available at http://qct.huduser.org/QCTGIS/US/Map.aspx.
Enter an Address, city, state or tract
Go
Texas
Bowie
Go
New Town
STATE LINE
Map Options : Clear | Reset
QCT Legend (%):
Tract Outline
Qualified Census Tracts (2013 and 2014)
LIHTC Project
QCT Options
14 Current Zoom Level
Show Tracts Outline (Zoom 11+)
Show LIHTC Projects (Zoom 11+)
Color Qualified Tracts (Zoom 7+)
Beverly Heights
Lower Highland Park
Downtown
Rose Hill
Map
Satellite
Texarkana College
New Boston Rd
Old Boston Rd
Westlawn Dr
N Robison Rd
Midway Dr
Summerhill Rd
Healthsouth Rehab Hospital-Texarkana
Wadley Regional Medical Center
Ace of Clubs House
W 4th St
107.00
106.00
105.00
104.00
108.00
109.00
101.00

CDBG Funding

Federal Statute requires that no less than 70% of the city's CDBG allocation must benefit low and moderate income persons and neighborhoods

- Persons/Families – housing, jobs, connections to infrastructure
- Neighborhoods – housing, infrastructure, parks, historic preservation, redevelopment

All projects and activities funded by CDBG must meet all federal laws and guidelines (multi-agency).

Texarkana TX HUD PY 2014 CDBG Allocation

Proposed Expenditures PY 2014 – 2015

Housing Reconstruction	$100,000
First Time Home Buyer Assistance	7,000
Revolving Loan Fund For Downtown	120,000
Downtown Façade and Infrastructure Improvements	42,306
Program Administration	62,326
TOTAL	$331,632

Attachment: Presentation 2014 CDBG Action Plan Final [Revision 2] (1105 : Res. No. 2014-060 2014 CDBG

City of Texarkana, Texas

Version: C

Briefing Sheet

Update Date: 5/16/2014 11:09 AM

Lead Department: Economic Development **Action Officer:** Jerry Sparks, Economic Developer

Subject: Resolution No. 2014-064 approving an application from Pecan Point Brewing Co. at 213 Main Street for a loan from the Facade Revolving Loan Fund Program with funds from the Economic Development Fund.

Briefing:	6/9/2014	**Public Hearing:**	6/9/2014	**Second Briefing:**	June 23, 2014	**Council Vote:**	7/14/2014

Item Schedule

Schedule 1: Brief twice - vote once (six weeks)

Updates/History of Briefing:

Not Applicable

Executive Summary and Background Information:

LOAN PROGRAM:	**Façade RLF**
POTENTIAL BORROWER:	**Pecan Point Brewing Co.** **John Hubbard & Bill Scurlock**
Objective:	**Improvements to Main Street property**
Loan Request	**$50,000**
Loan Approval:	**$50,000 for 10 years @ Bank rate + 1%**
Sources of funds:	**Façade RLF (Economic Development Fund)**
Collateral:	**Real Estate, personal guaranty**
Type of Project:	**Improvements to commercial property that has been vacant for several years.**
Jobs:	**8-10 new**

Narrative:

This loan will be used for improvements to property on Main Street next to the Perot Theater in downtown Texarkana. Subject property has been used as retail space and most recently used by TexRep for storage.

The location is within the target area for the Façade RLF. The borrower's financial statements indicate an ability to repay the loan if the operation does not produce adequate cash flow.

Potential Options:

- Approve recommendation of Façade RLF Loan Approval Committee
- Reject recommendation of Façade RLF Loan Approval Committee

Fiscal Implications:

An amount not to exceed $50,000 will be funded from the Economic Development Fund.

City of Texarkana, Texas

Staff Recommendation:

Staff recommends approval.

Advisory Board/Committee Review:

Façade RLF Loan Approval Committee recommends approval with security as indicated above.

Board/Committee Recommendation:

Façade Loan Approval Committee met on April 25, 2014.

Advisory Board/Committee Meeting Date and Minutes:

Not Applicable

Attachments

a. Goals and Perspectives (DOCX)
b. 2014-064 Pecan Point Resolution (DOC)
c. 2014-064 Pecan Point Facade design (PDF)
d. 064-2013 Info revised 15 May 2014 (PDF)
e. 2014-064 packet with photos (PDF)

Staff Coordination

Public Information Officer	Lisa Thompson	PIO Review	Completed	05/14/2014 3:39 PM
Economic Development	Jerry Sparks	Review	Completed	05/14/2014 3:42 PM
Community Redevelopment and Grants	Craig Lindholm	Review	Completed	05/14/2014 3:44 PM
Finance	Charlie Bassett	Review	Completed	05/15/2014 8:09 AM
City Manager	John Whitson	City Manager Review	Completed	05/16/2014 11:09 AM
City Council	Jennifer Evans	Meeting	Completed	06/10/2014 6:33 PM

Meeting History

City of Texarkana, Texas

Developing Perspectives and Goals Pending Approval by the City Council:

Perspectives	Goals
Serve the Community	☑ Promote an Environmentally Sensitive & Livable Community ☐ Provide a Safe Community ☐ Deliver Quality Services ☐ Foster a Healthy Community
Run the Operations	☐ Enhance Community Preparedness & Responsiveness ☐ Maximize Partnership Opportunities ☐ Provide Courteous & Responsive Customer Service ☑ Model a Positive City Image ☐ Deliver Efficient Services ☑ Cultivate Community Involvement & Access
Manage the Resources	☐ Maintain Fiscal Strength ☐ Maximize Utilization & Resources ☐ Invest in Infrastructure & Transportation
Develop Personnel	☐ Develop a Skilled & Diverse Workforce ☐ Create a Positive & Rewarding Work Culture

Perspectives and Goals Additional Comments:

NONE

Resource Impact:

Staff time required if item is approved:	Select One By Clicking Here

Other Potential Impacts:

NONE APPLICABLE

Public Information Plan:

☐	Newspaper Notice (Required by Statute)	☐	Public Hearing (Required by Statute)
☐	Public Forum/Input Session	☐	Press Release
☐	E-News Distribution	☐	Website Notice
☐	Social Media (Twitter, Facebook, etc.)	☐	Special Mailing
☐	Flyers Posted	☐	Banners Posted
☐	Survey	☐	Automated Phone Call
☑	None Required	☐	

Other:

Attachment: Goals and Perspectives [Revision 2] (1116 : Res No. 2014-064 Facade RLF Approval for Pecan Point Brewing)

RESOLUTION NO. 2014 - 064

A RESOLUTION OF THE CITY COUNCIL OF THE CITY OF TEXARKANA, TEXAS, APPROVING THE FUNDING OF A LOAN FROM THE FAÇADE REVOLVING LOAN FUND PROGRAM WITH FUNDS FROM THE ECONOMIC DEVELOPMENT FUND AND AUTHORIZING THE CITY MANAGER TO EXECUTE LOAN DOCUMENTS ON BEHALF OF THE CITY; AND ESTABLISHING AN EFFECTIVE DATE.

WHEREAS, by Resolution No. 64-2013, the City Council established a Façade/Landscape Revolving Loan Fund (FLRLF) for owner occupied/owner operated businesses in the Texarkana, Texas Downtown Gateway, Scenic, and Historic Special Design Districts and the Downtown TIRZ (TIRZ #2) District for the purpose of restoring or improving façades and landscaping; and

WHEREAS, the Façade/Landscape Revolving Loan Fund (FLRLF) will be capitalized with Economic Development funds on an annual basis in an amount not to exceed FIFTY THOUSAND AND NO/100 DOLLARS ($50,000.00); and

WHEREAS, the Façade/Landscape Revolving Loan Fund Committee will provide the administration of such revolving loan program to determine qualification and availability of funds; and

WHEREAS, the Façade Revolving Loan Committee has recommended the potential funding of a loan for construction of façade improvements by Pecan Point Brewing Co in an amount not to exceed $50,000; and

WHEREAS, the City Council recognizes the need for funding of projects to preserve structures and further economic development as evidenced by their creation and approval of the Façade Revolving Loan policy with Ordinance No. 064-2013;

NOW, THEREFORE, BE IT RESOLVED BY THE CITY COUNCIL OF THE CITY OF TEXARKANA, TEXAS:

SECTION 1: The City Council of the City of Texarkana, Texas approves funding a loan from the Façade Revolving Loan Fund to Pecan Point Brewing Co. and its owners, John Hubbard, and William Scurlock, in an amount not to exceed FIFTY THOUSAND AND NO/100 DOLLARS ($50,000.00) with collateral of a subsidiary lien on real estate and the personal guaranties of William Scurlock and John Hubbard.

SECTION 2: The City Council of the City of Texarkana, Texas authorizes the City Manager to execute loan documents for the Façade Revolving Loan Fund on behalf of the City in amounts not to exceed $50,000.

SECTION 3: That this Resolution shall be in full force and effect from and after its passage and approval.

PASSED AND APPROVED in Regular Council Session on this the 14th day of July, 2014.

ATTEST:

_____ _____

JENNIFER EVANS, CITY SECRETARY BOB BRUGGEMAN, MAYOR

Attachment: 2014-064 Pecan Point Resolution [Revision 6] (1116 : Res No. 2014-064 Facade RLF Approval for Pecan Point Brewing)

Attachment: 2014-064 Pecan Point Facade design (1116 : Res No. 2014-064 Facade RLF Approval for Pecan Point Brewing)

City of Texarkana
Economic Development

220 Texas Blvd
PO Box 1967
Texarkana, TX 75504

Phone: (903) 798-1715
Web: www.txkusa.org

MEMORANDUM

May 15, 2014

To: John Whitson, City Manager
Charlie Bassett, Jr. CFO

From: Jerry Sparks, Economic Developer
Craig Lindholm, Executive Director-Community Redevelopment/Grants

Subject: Façade/Landscape Revolving Loan Fund (FLRLF)

- The Façade/Landscape Revolving Loan Fund will be capitalized with Economic Development funds on an annual basis in an amount not to exceed $50,000. The FLRLF will be replenished each budget cycle with Economic Development funds to a maximum of $50,000.
- Loans are subject to the approval of the designated loan committee and availability of funds.
- Loans from the FLRLF are restricted to businesses located and operating in the Downtown Gateway, Scenic and Historic Special Design Districts, and the Downtown TIRZ (TIRZ 2) Districts. These areas have been established by Council ordinance or resolution for the purpose of redevelopment, revitalization, and reinvestment.
- Purpose of the loan proceeds: Façade/Landscape Revolving Loan funds are available to new or existing businesses to make exterior improvements to facades and landscape.
- Businesses in designated areas, such as special design and historic districts, must follow established guidelines when if using loan proceeds. This may include submittal of applications for certificate of appropriateness to the Public Works and Community Redevelopment and Grants Departments.
- For the purpose of this program, loans can be made to refinance qualifying projects completed during the previous twelve-month period.
- The Façade/Landscape Revolving Loan Fund may only be used to make loans to owner occupied/owner operated businesses located and licensed to operate in Texarkana, Texas.

Cell: 903-278-0102 *jerry.sparks@txkusa.org*

Attachment: 064-2013 Info revised 15 May 2014 (1116 : Res No. 2014-064 Facade RLF Approval for Pecan Point Brewing)

City of Texarkana
Economic Development

- Upon recommendation of Loan Committee and approval by Council, City Manager is authorized to execute loan documents on behalf of the City in amounts not to exceed $50,000 annually.
- Term of loans: Loans of $5,000 or less will have an amortization (repayment period) not to exceed three (3) years. For loans of more than $5,000, the loan approval committee has the authority to set a maximum amortization of up to seven (7) years for the loan. Extensions for the term of the loan may be applied for by the borrower.
- Interest rate: Loans from the Façade/Landscape Revolving Loan Fund will have an interest not less than 1% above the City's average rate on interest bearing bank accounts at the time of the loan. The City will have the authority to adjust this rate quarterly.
- The Loan Approval Committee will include the CFO, the Financial Services Manager, and the Economic Developer. The Grant Accountant shall have responsibility for packaging the loan for consideration by the Committee. The City Engineer, Executive Director of Community Planning and Public works, and the Executive Director of Community Redevelopment shall serve in advisory capacities.

Attachment: 064-2013 Info revised 15 May 2014 (1116 : Res No. 2014-064 Facade RLF Approval for Pecan Point Brewing)

Cell: 903-278-0102 *jerry.sparks@txkusa.org*

City of Texarkana, Texas

Version: B

Briefing Sheet

Update Date: 5/22/2014 11:04 AM

Lead Department: Police **Action Officer:** Charles Kreidler,

Subject: Ordinance No. 2014-066 approving and authorizing the reclassification of one Police Lieutenant position to a Police Sergeant position and authorizing assignment pay for the Police Department Chief of Staff.

Briefing:	6/23/2014	**Public Hearing:**	6/9/2014	**Second Briefing:**	June 23, 2014	**Council Vote:**	7/14/2014

Item Schedule
Schedule 1: Brief twice - vote once (six weeks)

Updates/History of Briefing:

Executive Summary and Background Information:

Executive Summary

With the resignation of Captain Danny Presley and the Promotion of Lieutenant Charles Kreidler to the vacated "appointed" Captain's position, the Police Department is recommending the reclassification of the vacant Police Lieutenant's position (formerly held by Captain Kreidler) to that of a Police Sergeant.

This reclassification will be the first step in restructuring the command structure of the Support Services Division of the Police Department. The second facet of restructuring allows the Chief of Police to administratively assign one of the incumbent Captains additional responsibilities as Chief of Staff. The Chief of Staff will have direct command of the Support Services Division and additional oversight of the other operational areas within the Police Department. The restructuring effort will provide the department a tighter span of control and enhance communications, continuity and accountability among and between line officers, supervisors and commanders.

Background

In the coming weeks, the police department will begin to transition away from our current four divisions to a three division configuration that will tighten the span of control and increase accountability. The existing Uniformed Services Division of the Department will maintain patrol and traffic operations. The existing Support Services Division will maintain its current tasks and inherit all operations from the Investigative Services Division and the POP Team from the Administrative Services Division. The Investigative Division will be eliminated and the Administrative Division will be limited to the Chief of Police, Office of Professional Responsibility/City Marshal and Department Administrative Coordinator including some shared budgetary expenditures that cross divisional lines.

The changes, as proposed, would eliminate the need for a Lieutenant in the position of Community Liaison as those duties have been absorbed by the new Neighborhood Area Coordinators that were appointed in 2013. Maintaining a Lieutenant in the current position would be a duplication of effort that does not meet the fiscal objectives of the Department. The move of the Investigative Services Division to Support Services raises a need for a first line

supervisor of detectives in the form of an additional Police Sergeant. The reclassification of the unfilled Police Lieutenant's position to a Sergeant would realize a budget savings while meeting the supervisory needs of the division and department.
The Texas Local Government Code - Civil Service statute requires that the governing body of a municipality establish the number of positions in the available police classifications (i.e. Police Officer, Sergeant, Lieutenant, and Captain). Therefore, the reclassification of a Police Lieutenant to a Police Sergeant would require approval of the council through an ordinance. As presented here, the proposed ordinance would eliminate one of the seven Police Lieutenant's positions for a new total of six, and increase the Police Sergeant positions from twelve to thirteen.

_____

In an effort to add further accountability to the restructuring of divisions, the Chief of Police will administratively assign an incumbent Captain to serve as a Chief of Staff. The Chief of Staff will report directly to the Chief of Police and in addition to divisional responsibilities, will have fiscal and operational oversight authority over personnel and missions of the other Police Department Divisions, provide coordination and guidance on all major department projects, ensure department wide follow through on key decisions, monitor staff assignments for completion, and have multi-divisional budgetary review authority and responsibility. Since the duties of the Chief of Staff will be in addition to normal divisional responsibilities, the Chief of Police is recommending additional compensation in the form of assignment pay in an amount of $250.00 per month.
The statutory vehicle for assignment pay is found in the Civil Service Statute of the Texas Local Government Code. The code specifically states:

> *b) The governing body of a municipality may authorize assignment pay for fire fighters and police officers who perform specialized functions in their respective departments.*
> *(c) The assignment pay is in an amount and is payable under conditions set by ordinance and is in addition to the regular pay received by members of the fire or police department.*

Potential Options:

-
-

Fiscal Implications:

These structural modifications are expected to realize a $25,000 cost reduction in FY 2014-15.

Staff Recommendation:

(Insert Text Here)

Advisory Board/Committee Review:

None

Board/Committee Recommendation:

(Not Applicable)

Advisory Board/Committee Meeting Date and Minutes:

Not Applicable

City of Texarkana, Texas

Attachments

a. Goals and Perspectives (DOCX)
b. Organizational Chart 12-2013(XLS)
c. Organization Chart July 2014 (DOCX)
d. Ordinance 2014-066 (DOC)

Staff Coordination

Police	Dan Shiner	Department Head Review	Completed	05/13/2014 10:36 AM
Public Information Officer	Lisa Thompson	PIO Review	Completed	05/13/2014 10:36 AM
City Manager	John Whitson	City Manager Review	Completed	05/13/2014 10:50 AM
City Council	Jennifer Evans	Meeting	Completed	06/10/2014 6:33 PM

Meeting History

City of Texarkana, Texas

Developing Perspectives and Goals Pending Approval by the City Council:

Perspectives	Goals
Serve the Community	☐ Promote an Environmentally Sensitive & Livable Community ☐ Provide a Safe Community ☑ Deliver Quality Services ☐ Foster a Healthy Community
Run the Operations	☐ Enhance Community Preparedness & Responsiveness ☐ Maximize Partnership Opportunities ☐ Provide Courteous & Responsive Customer Service ☐ Model a Positive City Image ☑ Deliver Efficient Services ☐ Cultivate Community Involvement & Access
Manage the Resources	☐ Maintain Fiscal Strength ☑ Maximize Utilization & Resources ☐ Invest in Infrastructure & Transportation
Develop Personnel	☐ Develop a Skilled & Diverse Workforce ☐ Create a Positive & Rewarding Work Culture

Perspectives and Goals Additional Comments:

See background section of Executive Summary

Resource Impact:

Staff time required if item is approved:	Low

Other Potential Impacts:

"NONE APPLICABLE"

Public Information Plan:

☐	Newspaper Notice (Required by Statute)	☐	Public Hearing (Required by Statute)
☐	Public Forum/Input Session	☐	Press Release
☐	E-News Distribution	☐	Website Notice
☐	Social Media (Twitter, Facebook, etc.)	☐	Special Mailing
☐	Flyers Posted	☐	Banners Posted
☐	Survey	☐	Automated Phone Call
☐	None Required	☐	

Other:

Attachment: Goals and Perspectives (1119 : Ord. No. 2014-066 Civil Service Position Reclassification and Assignment Pay Consideration)

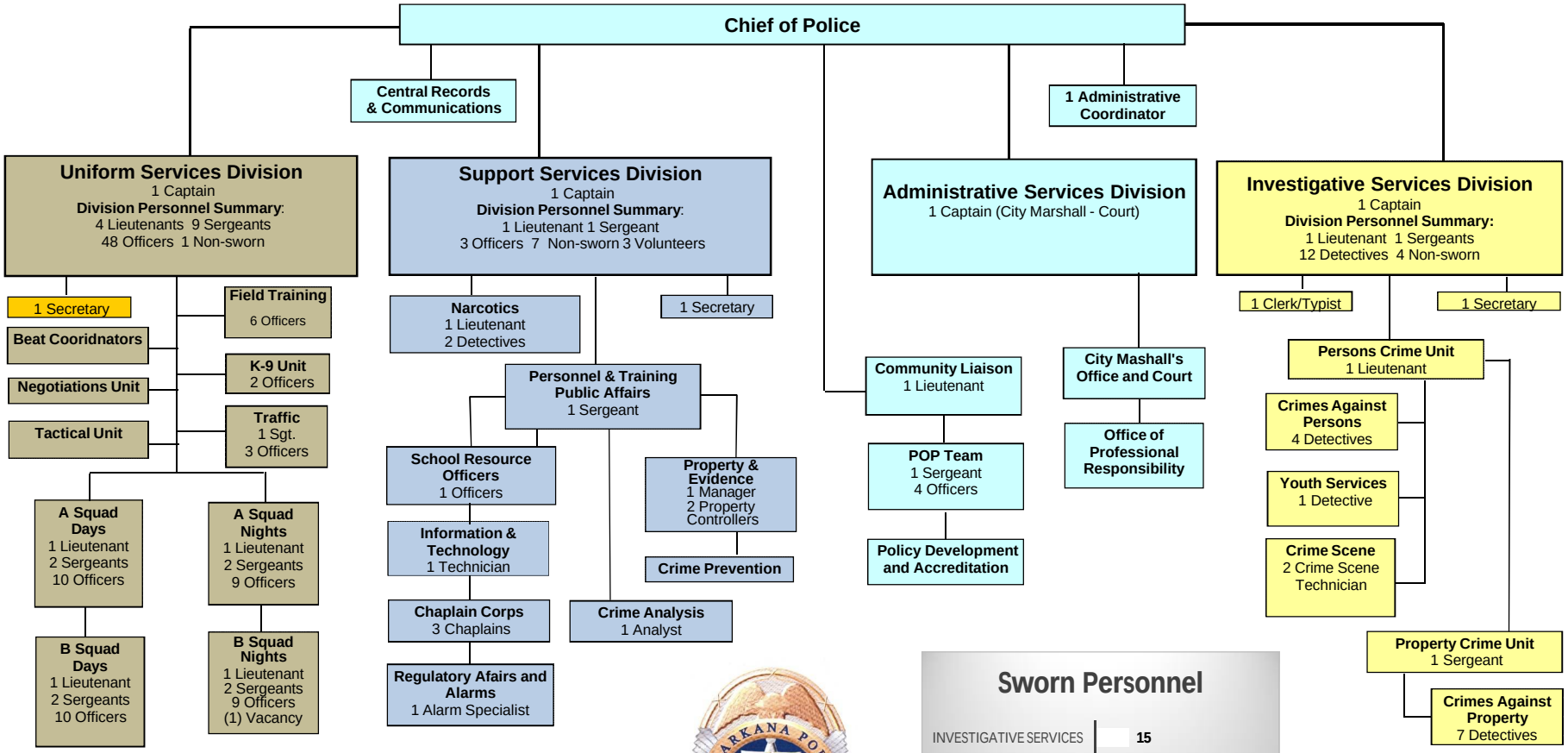

Texarkana Police Department Master Organizational Chart

Attachment: Organizational Chart 12-2013 (1119 : Ord. No. 2014-066 Civil Service Position

Texarkana Texas Police Department
Organization Chart

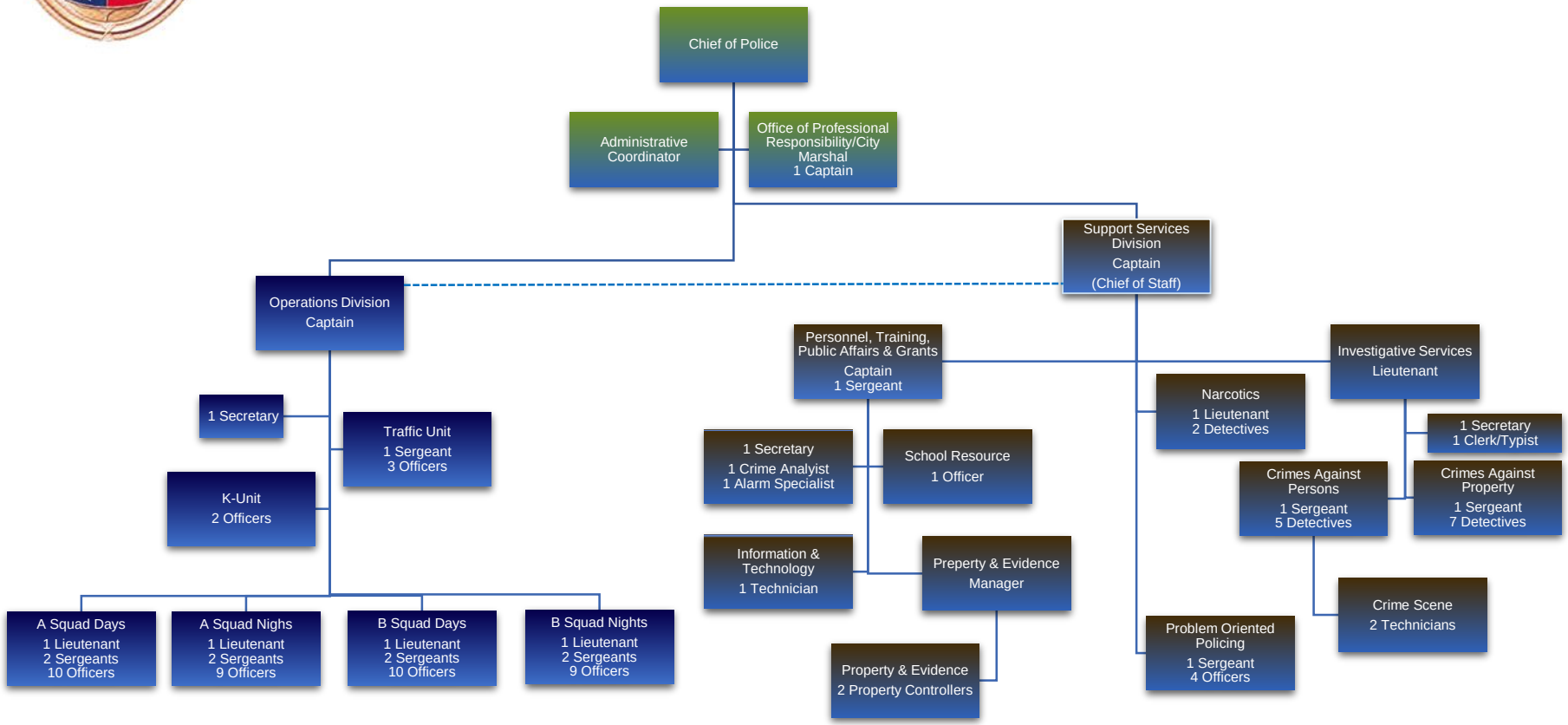

Department Personnel Summary

Authorized Positions:
Sworn 91; Non-sworn 13; Volunteers 3
Civil Service Frozen Positions 5

Effective July 2014

Attachment: Organization Chart July 2014 (1119 : Ord. No. 2014-066 Civil Service Position

ORDINANCE NO. 2014 - 066

AN ORDINANCE OF THE CITY COUNCIL OF THE CITY OF TEXARKANA, TEXAS, APPROVING AND AUTHORIZING THE RECLASSIFICATION OF ONE POLICE LIEUTENANT POSITION TO A POLICE SERGEANT POSITION AND AUTHORIZING ASSIGNMENT PAY FOR THE POLICE DEPARTMENT CHIEF OF STAFF; AND ESTABLISHING AN EFFECTIVE DATE.

WHEREAS, by Ordinance 7-48 dated May 25, 1948 the City of Texarkana, Texas adopted the Fireman's and Policeman's Civil Service Law as then found in Article 1269m, Texas Revised Civil Statutes, now codified at Texas Local Government Code, Section 143.001, et seq,; and

WHEREAS, Local Government Code, Section 143.021(a) states the commission shall provide for the classification of all police officers: and

WHEREAS, the municipality's governing body shall establish the classifications by ordinance, including the number of positions in each subsequent classification; and

WHEREAS, by ordinance 143-77 the City Council provided for a comprehensive redrafting of the Civil Service Classification System and authorized the number of positions within the Classification System; and

WHEREAS, there currently exists a need to amend the number of positions within the Classification System under ordinance 143-77 to accomplish restructuring of supervision for investigative personnel by including one additional Police Sergeant; and

WHEREAS, upon City Council approval the Classification System will be amended to increase the number of Police Sergeants from 12 to 13 while reducing the number of Police Lieutenants from 7 to 6; and

WHEREAS, the governing body of a municipality may authorize assignment pay for fire fighters and police officers who perform specialized functions in their respective departments with assignment pay in an amount and payable under conditions set by ordinance, in addition to the regular pay received by members of the fire and police departments; and

WHEREAS, the Chief of Police will administratively assign one incumbent Police Captain the additional duties of Department Chief of Staff with fiscal and operational oversight authority over personnel and missions of all Police Department Divisions, provide coordination and guidance on all major department projects, ensure department wide follow through on key decisions, monitor staff assignments for completion, and have multi-divisional budgetary review authority and responsibility; and

WHEREAS, upon City Council approval, assignment pay for the Captain administratively assigned as the Chief of Staff will be in the amount of $250.00 per month.

NOW, THEREFORE, BE IT ORDAINED BY THE CITY COUNCIL OF THE CITY OF TEXARKANA, TEXAS:

SECTION 1: That the reclassification of one (1) Police Lieutenant position to one (1) Police Sergeant position is hereby approved and authorized, and Section 3 of Ordinance 142-77 as last amended by Section 2 of Ordinance 069-03 is hereby amended so as to substitute a new "Exhibit to Section 3" which shall read in its entirety as follows:

Exhibit to Section 3

CLASSIFICATION		AUTHORIZED POSITIONS
Police Captain		4
Police Lieutenant		6
Police Sergeant		13
Police Officer		73
	Total	96

SECTION 2: The addition of assignment pay in the amount of $250.00 per month for assignment of a Captain as the Police Department Chief of Staff is hereby approved and authorized in accordance with the Texas Local Government Code 143.042.

SECTION 3: The purpose and intent of this Ordinance on the Civil Service Classification system of the Texarkana Texas Police Department is to reclassify one Police Lieutenant Position to that of a Police Sergeant Position.

SECTION 4: It is further provided that in case a section, clause, sentence or part of this Ordinance shall be deemed or adjudged by a court of competent jurisdiction to be invalid, then such invalidity shall not affect, impair, or invalidate the remainder of this Ordinance.

SECTION 5: That this Ordinance shall be in full force and effect from and after its passage and approval.

PASSED AND APPROVED in Regular Council Session on this the ___ day of ___, 2014.

ATTEST:

_____ _____

JENNIFER EVANS, CITY SECRETARY BOB BRUGGEMAN, MAYOR

Attachment: Ordinance 2014-066 [Revision 1] (1119 : Ord. No. 2014-066 Civil Service Position Reclassification and Assignment Pay

City of Texarkana, Texas

Version: B

Briefing Sheet

Update Date: 5/15/2014 12:57 PM

Lead Department: Public Works **Action Officer:** Debbie Burk,

Subject: Ordinance No. 2014-068 rezoning Lots 12-20, Block 1, Bellview Addition, located in the 3000 block of Lincoln Avenue. Single Family-2 to General Retail. Texarkana ISD, owner. David Williams, MTG Engineering, agent.

Briefing: 6/9/2014	**Public Hearing:** 6/9/2014	**Second Briefing:** June 23, 2014	**Council Vote:** 7/14/2014

Item Schedule

Schedule 1: Brief twice - vote once (six weeks)

Updates/History of Briefing:

Executive Summary and Background Information:

Z-14-5: This is a request by Paul Norton, representing TISD, owner, and David Williams, MTG Engineering, agent, to rezone Lots 12-20, Block 1, Bellview Addition, located in the 3000 block of Lincoln Avenue from Single Family-2 to General Retail. Texarkana ISD is proposing to lease this property to McLarty Ford for an employee parking lot. The current use of the property is a playground area and public recreational area. Texarkana ISD has indicated that the campus at this location was converted to Options Academic Alternative High School and the current and planned use by Texarkana ISD as the Options campus does not have a need for a playground area. Since the area is also used as a public recreational area for youth baseball and soccer practice, the applicant has indicated that the current backstop located within this proposed parking area will be relocated to the south to allow the continued use by the public.

The adjacent zoning is SF-2 to the east and south, Commercial and General Retail to the north and General Retail to the west. The adjacent land use is a vacant business with a parking lot to the north, the TISD Options Campus to the south, vacant property to the east, and McLarty Ford Car Sales lot to the west.

The Comprehensive Plan has designated this as a low density residential area.

This property was originally platted as a small lot residential subdivision in the 1940's. In 1960, the City of Texarkana, Texas sold this property to Texarkana ISD along with the platted street right-of-way for the future growth of the Lincoln Street Campus. As stated above, that campus has now been converted to an alternative high school campus that no longer needs the playground area. The tracts to the north and west are currently being used as retail and commercial use. This parking lot will be adjacent to these business uses.

All notification and application requirements have been met to consider this request.

Potential Options:

None

City of Texarkana, Texas

Fiscal Implications:

None

Staff Recommendation:

Since Texarkana ISD is willing to relocate the existing backstop to the south to allow the public to continue to utilize the area for public use such as baseball and soccer practice, staff recommends for approval of the request. The Commission can also consider rezoning to Parking (P), which would accommodate the request and not allow for a building or business expansion on this property. This would be the most restrictive zoning for the proposed use.

Advisory Board/Committee Review:

Planning and Zoning Commission

Board/Committee Recommendation:

The Planning and Zoning Commission at their meeting on May 5, 2014 unanimously recommended for approval of this request.

Advisory Board/Committee Meeting Date and Minutes:

Attachments

a. Ordinance # 2014-068(DOCX)
b. Goals and Perspectives (DOCX)
c. Maps attachment for Ord. 2014-068 (PDF)
d. Ward map for Ord. 2014-068 (PDF)

Staff Coordination

Public Works	Shirley Jaster	Department Head Review	Completed	05/15/2014 10:06 AM
Public Information Officer	Lisa Thompson	PIO Review	Completed	05/15/2014 10:11 AM
City Manager	John Whitson	City Manager Review	Completed	05/15/2014 11:05 AM
City Council	Jennifer Evans	Meeting	Completed	06/10/2014 6:33 PM

Meeting History

Z-14-5

ORDINANCE NO. 2014-068

AN ORDINANCE OF THE CITY COUNCIL OF THE CITY OF TEXARKANA, TEXAS, AMENDING THE ZONING ORDINANCE OF THE CITY OF TEXARKANA, TEXAS, BY REZONING LOTS 12-20, BLOCK 1, BELLVIEW ADDITION, LOCATED IN THE 3000 BLOCK OF LINCOLN AVENUE IN THE CITY OF TEXARKANA, BOWIE COUNTY, TEXAS FROM SINGLE FAMILY-2 TO GENERAL RETAIL; CONTAINING A REPEALER CLAUSE; CONTAINING A SEVERABILITY CLAUSE; AND ESTABLISHING AN EFFECTIVE DATE.

WHEREAS, an application has been filed requesting an amendment to the Zoning Ordinance of the City of Texarkana, Texas, to rezone Lots 12-20, Block 1, Bellview Addition, located in the 3000 block of Lincoln Avenue in the City of Texarkana, Bowie County, Texas, from **Single Family-2 to General Retail;** and

WHEREAS, the Planning and Zoning Commission of the City of Texarkana, Texas and the City Council of the City of Texarkana, Texas, in compliance with the laws of the State of Texas with reference to the granting of zoning classifications and changes, have given the requisite notices by publication and otherwise, and after holding hearings and affording a full and fair hearing to all property owners generally and to all persons interested and situated in the affected area and in the vicinity thereof; and

WHEREAS, after consideration of said application, the Planning and Zoning Commission of the City of Texarkana, Texas **voted five (5) to zero (0) to recommend the application for rezoning** from **Single Family-2 to General Retail** to the City Council of Texarkana, Texas; and

WHEREAS, after consideration of said application and the recommendation of the Planning and Zoning Commission, the City Council of the City of Texarkana, Texas, does hereby find that rezoning the property from **Single Family-2 to General Retail** is in the best interest of the public health, safety, morals and general welfare of the City;

NOW, THEREFORE, BE IT ORDAINED BY THE CITY COUNCIL OF THE CITY OF TEXARKANA, TEXAS:

SECTION 1: That the Zoning Ordinance of the City of Texarkana, Texas, Ordinance No. 127-70, passed and approved on September 14, 1970, be and is hereby further amended to rezone Lots 12-20, Block 1, Bellview Addition, located in the 3000 block of Lincoln Avenue in the City of Texarkana, Bowie County, Texas, from **Single Family-2 to General Retail.**

SECTION 2: It is further provided that in case a section, clause, sentence or part of this Ordinance shall be deemed or adjudged by a court of competent jurisdiction to be invalid, then such invalidity shall not affect, impair, or invalidate the remainder of this Ordinance.

Attachment: Ordinance # 2014-068 [Revision 1] (1121 : Ord. No. 2014-068 Z-14-5: 3000 block of Lincoln Street; SF-2 to GR)

SECTION 3: All Ordinances or parts of Ordinances in conflict herewith are specifically repealed to the extent of such conflict.

SECTION 4: That this Ordinance shall be in full force and effect from and after its passage and approval.

PASSED AND APPROVED in Regular Council Session on this the 14th day of July, 2014.

ATTEST:

JENNIFER EVANS, CITY SECRETARY	BOB BRUGGEMAN, MAYOR

Attachment: Ordinance # 2014-068 [Revision 1] (1121 : Ord. No. 2014-068 Z-14-5: 3000 block of Lincoln Street; SF-2 to GR)

City of Texarkana, Texas

Developing Perspectives and Goals Pending Approval by the City Council:

Perspectives	Goals
Serve the Community	☐ Promote an Environmentally Sensitive & Livable Community ☐ Provide a Safe Community ☐ Deliver Quality Services ☐ Foster a Healthy Community
Run the Operations	☐ Enhance Community Preparedness & Responsiveness ☐ Maximize Partnership Opportunities ☐ Provide Courteous & Responsive Customer Service ☑ Model a Positive City Image ☐ Deliver Efficient Services ☑ Cultivate Community Involvement & Access
Manage the Resources	☐ Maintain Fiscal Strength ☐ Maximize Utilization & Resources ☐ Invest in Infrastructure & Transportation
Develop Personnel	☐ Develop a Skilled & Diverse Workforce ☐ Create a Positive & Rewarding Work Culture

Perspectives and Goals Additional Comments:

None

Resource Impact:

Staff time required if item is approved:	Select One By Clicking Here

Other Potential Impacts:

Not applicable.

Public Information Plan:

☑	Newspaper Notice (Required by Statute)	☑	Public Hearing (Required by Statute)
☐	Public Forum/Input Session	☐	Press Release
☐	E-News Distribution	☑	Website Notice
☐	Social Media (Twitter, Facebook, etc.)	☑	Special Mailing
☐	Flyers Posted	☐	Banners Posted
☐	Survey	☐	Automated Phone Call
☐	None Required	☑	Sign posted

Other:

Attachment: Goals and Perspectives (1121 : Ord. No. 2014-068 Z-14-5: 3000 block of Lincoln Street; SF-2 to GR)

Attachment: Maps attachment for Ord. 2014-068 (1121 : Ord. No. 2014-068 Z-14-5: 3000 block of Lincoln Street; SF-2 to GR)

Attachment: Maps attachment for Ord. 2014-068 (1121 : Ord. No. 2014-068 Z-14-5: 3000 block of Lincoln Street; SF-2 to GR)

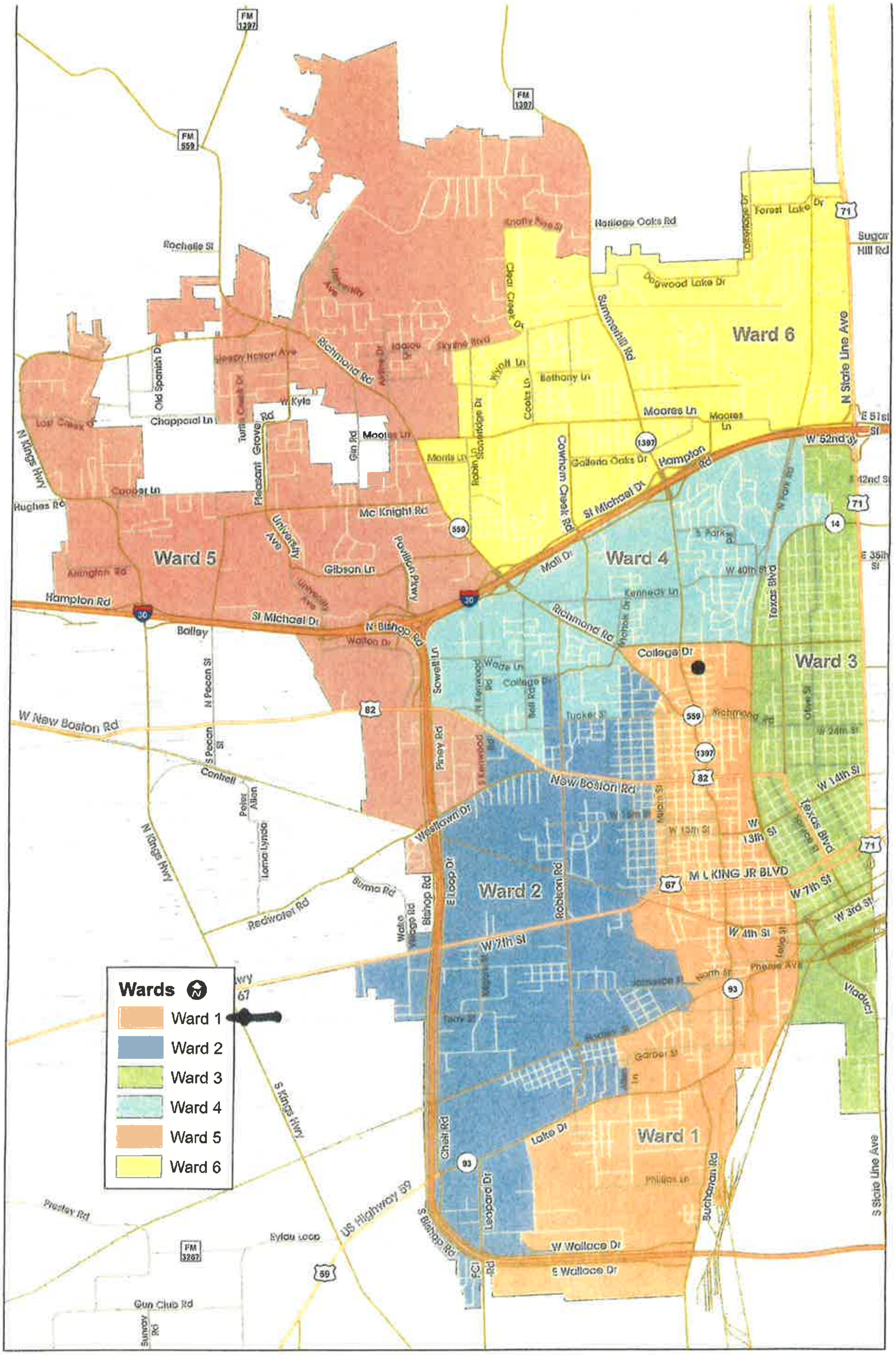

Attachment: Ward map for Ord. 2014-068 (1121 : Ord. No. 2014-068 Z-14-5: 3000 block of Lincoln Street; SF-2 to GR)

City of Texarkana, Texas

Version: H

Briefing Sheet

Update Date: 5/29/2014 9:03 AM

Lead Department: Public Works **Action Officer:** Debbie Burk,

Subject: Ordinance No. 2014-069 amending the University Planned Development District (UPDD) of the Zoning Ordinance to amend allowed uses in Area 8 along Richmond Road by adding the use of a landscape maintenance business with outdoor display sales and equipment. Jerry Clanton, owner. Andrea Freeman, agent. (Due to Planning and Zoning Commission denial, a 3/4 vote by the City Council is required to approve this request).

Briefing:	6/23/2014	**Public Hearing:**	6/9/2014	**Second Briefing:**	June 23, 2014	**Council Vote:**	7/14/2014

Item Schedule

Schedule 1: Brief twice - vote once (six weeks)

Updates/History of Briefing:

None applicable

Executive Summary and Background Information:

This is a request by Jerry Clanton, owner, and Andrea Freeman representing Freeman Design and Consultation, agent, to amend the University Planned Development District (UPDD) guidelines in Area 8 to allow the additional use of a landscape maintenance business that includes an office, maintenance equipment, outside storage and display of plants and material, stone, fountains, etc. The location for the proposed business is in an existing building at 6300 Richmond Road.

According to the UPDD guidelines, the following uses are allowed in the "Richmond Road Mixed Use Development Area 8":

a. Fast Food Eateries
b. Gas stations
c. Townhomes
d. Day Care Facility Neighborhood Health Center

Richmond Road Mixed Use Development Area 8 also allows the uses in Area 3 (Retail and Mixed Uses) which include:

Schools, Banks/Financial Service, Restaurants, Offices, Mixed Use Multi-level Retail, (office and upper floor condominiums), Department Stores, Coffee or Bakery Shops, Medical Clinics (7500 sq. foot max), Retail Shops under 10,000 sq. foot, Single Family Residences

It should be noted that an existing car wash and feed store/plant greenhouse that were established businesses when the UPDD was created are now considered non-conforming uses of the UPDD. These uses are allowed to remain but would not be allowed as new uses.

Potential Options:

City of Texarkana, Texas

None

Fiscal Implications:

None

Staff Recommendation:

Staff has determined that the requested use of a landscape maintenance business with outside storage and display does not fall within the perimeter of retail uses set for Area 8 in the UPDD guidelines. Staff informed the applicant that only office and design consulting could be operated at this location in the UPDD.
In looking at the overall UPDD and district uses, Area 8, Richmond Road, is perceived as a main entry into the UPDD district. Retail use as well as office use was the targeted type business desired for this gateway. Consideration was given for existing residential uses in conjunction with the University and an elementary school in the area. Outdoor sales and storage of equipment and materials was considered not a desirable use in this corridor. Also, no auto dealerships with vehicles for sale were allowed in this Area 8 district. Due to these factors, the staff recommends for denial of this request to add this additional use.

Advisory Board/Committee Review:

Planning and Zoning Commission

Board/Committee Recommendation:

The Planning and Zoning Commission at their meeting on May 5, 2014 recommended for denial with 4 members voting against the request and 1 member abstaining from voting. Due to Planning and Zoning Commission denial, a 3/4 vote by the City Council is required to approve this request.

Advisory Board/Committee Meeting Date and Minutes:

Attachments

a. Ord. # 2014-069 (DOCX)
b. Goals and Perspectives (DOCX)
c. Maps attachment for Ord. 2014-069 (PDF)
d. Ward map for Ord. 2014-069 (PDF)

Staff Coordination

Public Works	Shirley Jaster	Department Head Review	Completed	05/15/2014 10:14 AM
Public Information Officer	Lisa Thompson	PIO Review	Completed	05/15/2014 10:15 AM
City Manager	John Whitson	City Manager Review	Completed	05/15/2014 11:13 AM
City Council	Jennifer Evans	Meeting	Completed	06/10/2014 6:33 PM

Meeting History

PUBLISH

ORDINANCE NO. 2014-069

AN ORDINANCE OF THE CITY COUNCIL OF THE CITY OF TEXARKANA, TEXAS, AMENDING THE ZONING ORDINANCE OF THE CITY OF TEXARKANA, TEXAS, BY AMENDING THE UNIVERSITY PLANNED DEVELOPMENT DISTRICT (UPDD), SECTION E. 8.) "USE REGULATIONS," "RICHMOND ROAD MIXED USE DEVELOPMENT" BY ADDING 'e. LANDSCAPE MAINTENANCE BUSINESS WITH OUTDOOR DISPLAY SALES AND EQUIPMENT'; PROVIDING FOR PUBLICATION; CONTAINING A REPEALER CLAUSE; CONTAINING A SEVERABILITY CLAUSE; AND ESTABLISHING AN EFFECTIVE DATE.

WHEREAS, the University Planned Development District (UPDD) was approved by Council by Ordinance No. 052-2012 on June 11, 2012; and

WHEREAS, a citizen has requested consideration to add the additional use of a landscape maintenance business with outdoor display sales and equipment in the UPDD; and

WHEREAS, the Planning and Zoning Commission of the City of Texarkana, Texas and the City Council of the City of Texarkana, Texas, in compliance with the laws of the State of Texas with reference to the granting of zoning classifications and changes, have given the requisite notices by publication and otherwise, and after holding hearings and affording a full and fair hearing to all property owners generally and to all persons interested and situated in the affected area and in the vicinity thereof; and

WHEREAS, after consideration of said application, the Planning and Zoning Commission of the City of Texarkana, Texas **voted by a vote of four (4) to zero (0), with one (1) member abstaining, to recommend for denial to allow the additional use of a landscape maintenance business with outdoor display sales and equipment** to the City Council of Texarkana, Texas; and

NOW, THEREFORE, BE IT ORDAINED BY THE CITY COUNCIL OF THE CITY OF TEXARKANA, TEXAS:

SECTION 1: That the City Council approves the amendment to the Zoning Ordinance of the City of Texarkana, Texas, by amending the University Planned Development District (UPDD) by adding the following to Section E. Use Regulations; 8.) Richmond Road Mixed Use Development:

e. Landscape maintenance business with outdoor display sales and equipment.

SECTION 2: That the City Secretary be and is hereby directed to publish the caption of this Ordinance for three (3) successive days in the Texarkana Gazette within ten (10) days of the passage of this Ordinance, as provided in Article XI, Section 3 of the Charter of the City of Texarkana, Texas.

Attachment: Ord. # 2014-069 [Revision 2] (1122 : Ord No. 2014-069 Amendment to UPDD to add a business use in Area 8)

PUBLISH

SECTION 3: That in case a section, clause, sentence or part of this Ordinance shall be deemed or adjudged by a Court of competent jurisdiction to be invalid, then such invalidity shall not affect, impair or invalidate the remainder of this Ordinance.

SECTION 4: That all Ordinances or parts of Ordinances in conflict herewith are specifically repealed to the extent of such conflict.

SECTION 5: That this Ordinance, upon publication as provided herein, shall be in full force and effect ten (10) days after its passage and approval.

PASSED AND APPROVED in Regular Council Session on this the 14th day of July, 2014.

ATTEST:

JENNIFER EVANS, CITY SECRETARY	BOB BRUGGEMAN, MAYOR

Attachment: Ord. # 2014-069 [Revision 2] (1122 : Ord No. 2014-069 Amendment to UPDD to add a business use in Area 8)

City of Texarkana, Texas

Developing Perspectives and Goals Pending Approval by the City Council:

Perspectives	Goals
Serve the Community	☑ Promote an Environmentally Sensitive & Livable Community ☐ Provide a Safe Community ☐ Deliver Quality Services ☐ Foster a Healthy Community
Run the Operations	☐ Enhance Community Preparedness & Responsiveness ☐ Maximize Partnership Opportunities ☐ Provide Courteous & Responsive Customer Service ☑ Model a Positive City Image ☐ Deliver Efficient Services ☐ Cultivate Community Involvement & Access
Manage the Resources	☐ Maintain Fiscal Strength ☐ Maximize Utilization & Resources ☐ Invest in Infrastructure & Transportation
Develop Personnel	☐ Develop a Skilled & Diverse Workforce ☐ Create a Positive & Rewarding Work Culture

Perspectives and Goals Additional Comments:

None

Resource Impact:

Staff time required if item is approved:	Select One By Clicking Here

Other Potential Impacts:

Public Information Plan:

☑	Newspaper Notice (Required by Statute)	☑	Public Hearing (Required by Statute)
☐	Public Forum/Input Session	☐	Press Release
☐	E-News Distribution	☑	Website Notice
☐	Social Media (Twitter, Facebook, etc.)	☑	Special Mailing
☐	Flyers Posted	☐	Banners Posted
☐	Survey	☐	Automated Phone Call
☐	None Required	☑	Sign posted

Other:

Attachment: Goals and Perspectives (1122 : Ord No. 2014-069 Amendment to UPDD to add a business use in Area 8)

Attachment: Maps attachment for Ord. 2014-069 (1122 : Ord No. 2014-069 Amendment to UPDD to add a business use in Area 8)

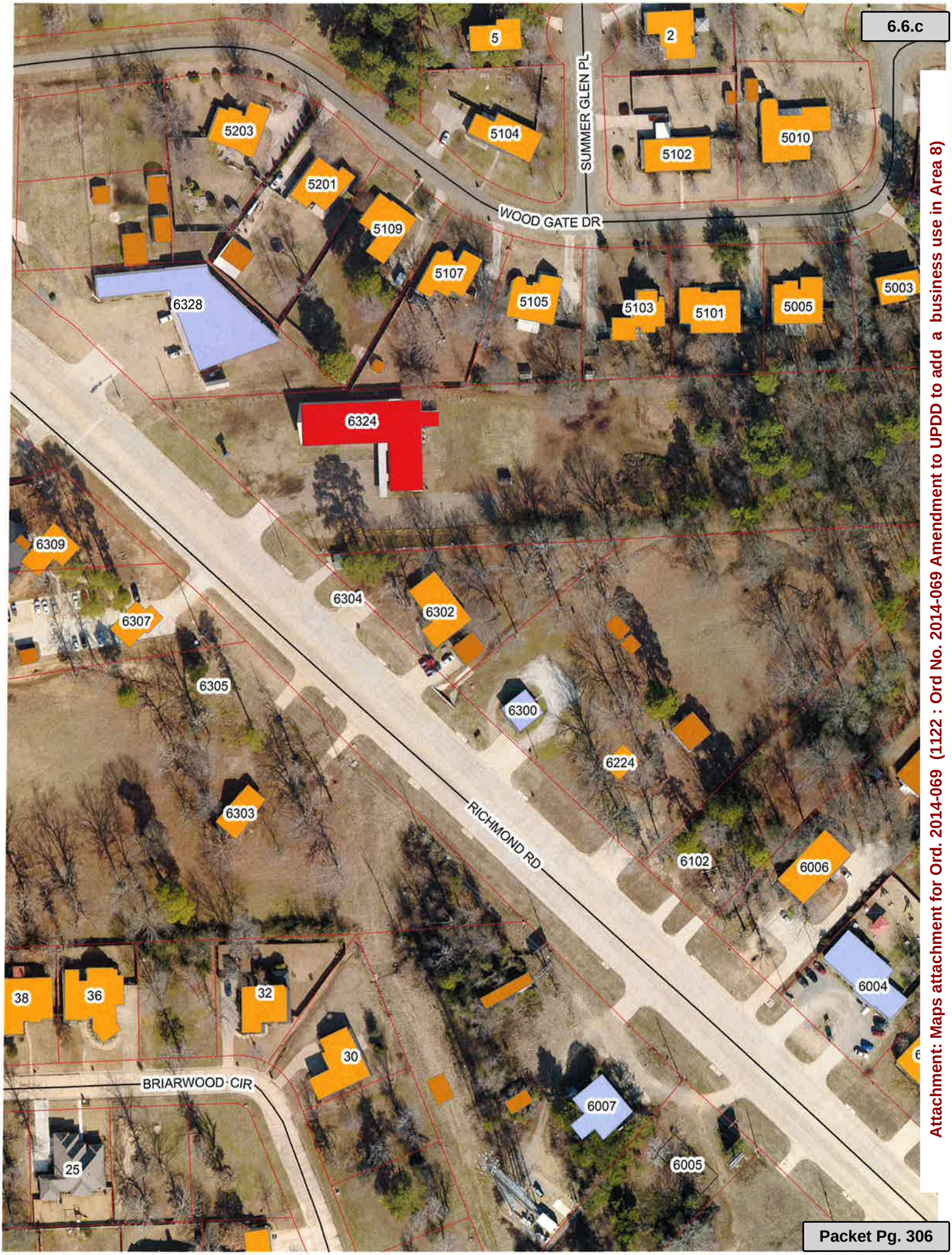

Attachment: Maps attachment for Ord. 2014-069 (1122 : Ord No. 2014-069 Amendment to UPDD to add a business use in Area 8)

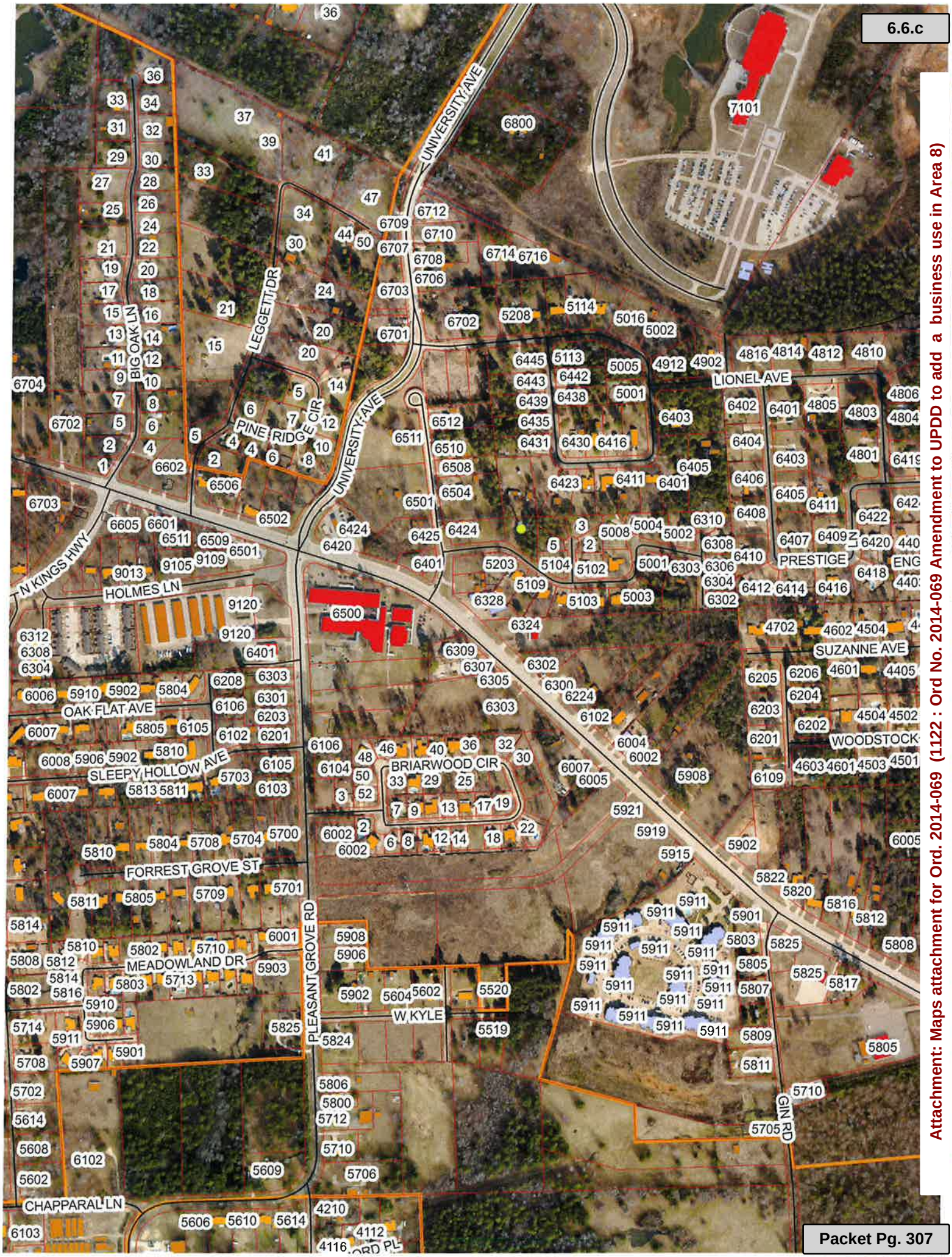

Attachment: Maps attachment for Ord. 2014-069 (1122 : Ord No. 2014-069 Amendment to UPDD to add a business use in Area 8)

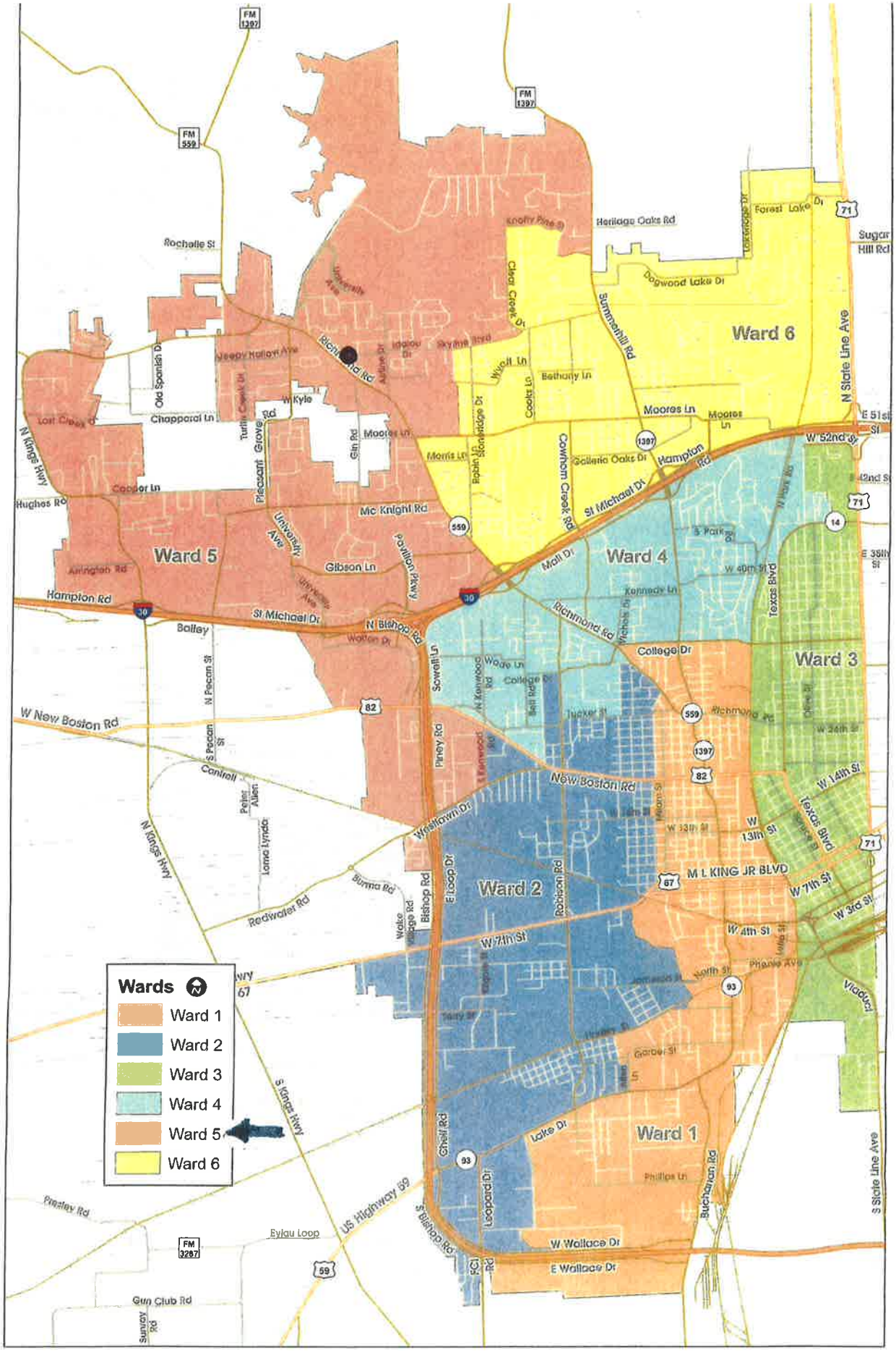

Attachment: Ward map for Ord. 2014-069 (1122 : Ord No. 2014-069 Amendment to UPDD to add a business use in Area 8)

City of Texarkana, Texas

Version: F

Briefing Sheet

Update Date: 6/3/2014 10:25 AM

Lead Department: Water Utilities **Action Officer:** Gary Smith,

Subject: Resolution No. 2014-070 authorizing the City Manager to accept the bid and enter into a contract with Rorie Stone Construction, LLC of Texarkana, Texas, in an amount not to exceed $124,337.25 for the N. Kings Highway 12" Water Main Extension Project.

Briefing:	6/9/2014	**Public Hearing:**	6/9/2014	**Second Briefing:**	June 23, 2014	**Council Vote:**	7/14/2014

Item Schedule

Schedule 1: Brief twice - vote once (six weeks)

Updates/History of Briefing:

NOT APPLICABLE

Executive Summary and Background Information:

Bids were received Tuesday, May 13, 2014 for the N. Kings Highway – 12” Water Main Extension. Six (6) contractors picked up bid packages for the project and five (5) contractors bid on the project. Rorie Stone Construction, LLC of Texarkana, Texas was the apparent low bidder with a low bid of $124,337.35. This project will connect two dead end mains beginning approximately six hundred feet (600’) east of Pleasant View Drive and running east to the PGISD Intermediate School. Water quality, pressure, and fire protection will be greatly improved. This project will consist of installing approximately two thousand seven hundred feet (2,700’) of twelve inch (12”) water main, one twenty inch (20”) steel cased bore, three new fire hydrants assemblies and related appurtenances. Rorie Stone Construction has successfully completed several jobs for the Utility including the Hampton Lane twelve inch (12”) water main extension and the Lakedrive Overpass water and sewer relocations.

Potential Options:

- None
-

Fiscal Implications:

This project is well below the budgeted amount of $200,000. Funds were budgeted in the Utility’s 2013-2014 Budget in the Texas Capital Improvement Fund.

Staff Recommendation:

Texarkana Water Utilities staff recommends approval.

Advisory Board/Committee Review:

NONE

City of Texarkana, Texas

Board/Committee Recommendation:

NOT APPLICABLE

Advisory Board/Committee Meeting Date and Minutes:

NOT APPLICABLE

Attachments

a. Goals and Perspectives (DOCX)
b. Res No. 2014-70 N Kings Hwy 12 Inch WL (DOCX)
c. N Kings HWY 12in Water Main Extension (PDF)
d. Bid tab.xls (PDF)

Staff Coordination

Water Utilities	JD Phillips	Review	Completed	05/15/2014 1:48 PM
Water Utilities	Bill King	Water Utilities Review	Completed	05/15/2014 4:24 PM
TWU Finance	Jim Cornelius	TWU Finance Review	Completed	05/15/2014 4:37 PM
Public Information Officer	Lisa Thompson	PIO Review	Completed	05/15/2014 4:45 PM
City Manager	John Whitson	City Manager Review	Completed	05/16/2014 3:50 PM
City Council	Jennifer Evans	Meeting	Completed	06/10/2014 6:33 PM

Meeting History

City of Texarkana, Texas

Developing Perspectives and Goals Pending Approval by the City Council:

Perspectives	Goals
Serve the Community	☐ Promote an Environmentally Sensitive & Livable Community ☐ Provide a Safe Community ☑ Deliver Quality Services ☐ Foster a Healthy Community
Run the Operations	☐ Enhance Community Preparedness & Responsiveness ☐ Maximize Partnership Opportunities ☐ Provide Courteous & Responsive Customer Service ☐ Model a Positive City Image ☑ Deliver Efficient Services ☐ Cultivate Community Involvement & Access
Manage the Resources	☐ Maintain Fiscal Strength ☐ Maximize Utilization & Resources ☑ Invest in Infrastructure & Transportation
Develop Personnel	☐ Develop a Skilled & Diverse Workforce ☐ Create a Positive & Rewarding Work Culture

Perspectives and Goals Additional Comments:

NONE

Resource Impact:

Staff time required if item is approved:	Select One By Clicking Here

Other Potential Impacts:

NONE APPLICABLE

Public Information Plan:

☑	Newspaper Notice (Required by Statute)	☐	Public Hearing (Required by Statute)
☐	Public Forum/Input Session	☐	Press Release
☐	E-News Distribution	☐	Website Notice
☐	Social Media (Twitter, Facebook, etc.)	☐	Special Mailing
☐	Flyers Posted	☐	Banners Posted
☐	Survey	☐	Automated Phone Call
☐	None Required	☐	

Other:

Attachment: Goals and Perspectives (1123 : Res No. 2014- 070 - N. Kings Highway 12" Water Main Extension)

RESOLUTION NO. 2014-070

A RESOLUTION OF THE CITY COUNCIL OF THE CITY OF TEXARKANA, TEXAS, AUTHORIZING THE CITY MANAGER TO ACCEPT THE BID AND ENTER INTO A CONTRACT WITH RORIE STONE CONSTRUCTION, LLC OF TEXARKANA, TEXAS, IN AN AMOUNT NOT TO EXCEED ONE HUNDRED TWENTY FOUR THOUSAND THREE HUNDRED THIRTY SEVEN AND 25/100 DOLLARS ($124,337.25) FOR THE N. KINGS HIGHWAY 12" WATER MAIN EXTENSION PROJECT TO LOOP TWO DEAD END MAINS WHILE IMPROVING WATER QUALITY, PRESSURE, AND FLOW; AND ESTABLISHING AN EFFECTIVE DATE.

WHEREAS, May 13, 2014, six (6) bids were received by Texarkana Water Utilities for the N. Kings Highway – 12" Water Main Extension Project which will loop two dead end mains while improving water quality, pressure, and fire protection; and

WHEREAS, the project will consist of installing approximately two thousand seven hundred feet (2,700') of twelve inch (12") water main, one twenty inch (20") steel cased bore, three new fire hydrants assemblies and related appurtenances; and

WHEREAS, the lowest and best bid by a responsible vendor for this project was submitted by RORIE STONE CONSTRUCTION, LLC of Texarkana, Texas, a copy of which is attached hereto as Exhibit "A," in an amount not to exceed ONE HUNDRED TWENTY FOUR THOUSAND THREE HUNDRED THIRTY SEVEN AND 25/100 DOLLARS ($124,337.25); and

WHEREAS, the funds were budgeted in the Texarkana Water Utilities 2013-2014 Budget at TWO HUNDRED THOUSAND AND NO/100 DOLLARS ($200,000.00) in the Texas Capitol Improvement Fund.

NOW, THEREFORE, BE IT RESOLVED BY THE CITY COUNCIL OF THE CITY OF TEXARKANA, TEXAS:

SECTION 1: That the lowest and best bid by a responsible vendor, submitted by RORIE STONE CONSTRUCTION, LLC. of Texarkana, Texas, a copy of which is attached hereto as Exhibit "A," be and is hereby approved in an amount not to exceed ONE HUNDRED TWENTY FOUR THOUSAND THREE HUNDRED THIRTY SEVEN AND 25/100 DOLLARS ($124,337.25) for the installation of approximately two thousand seven hundred feet (2,700') of twelve inch (12") water main, one twenty inch (20") steel cased bore, three new fire hydrants assemblies, and related appurtenances for the N. Kings Highway - 12" Water Main Extension Project.

SECTION 2: That the City Manager be and is authorized to contract with RORIE STONE CONSTRUCTION, LLC of Texarkana, Texas for the above-described services.

SECTION 3: That this Resolution shall be in full force and effect from and after its passage and approval.

PASSED AND APPROVED in Regular Council Session on this the 14th day of July, 2014.

ATTEST:

_____ _____

JENNIFER EVANS, CITY SECRETARY BOB BRUGGEMAN, MAYOR

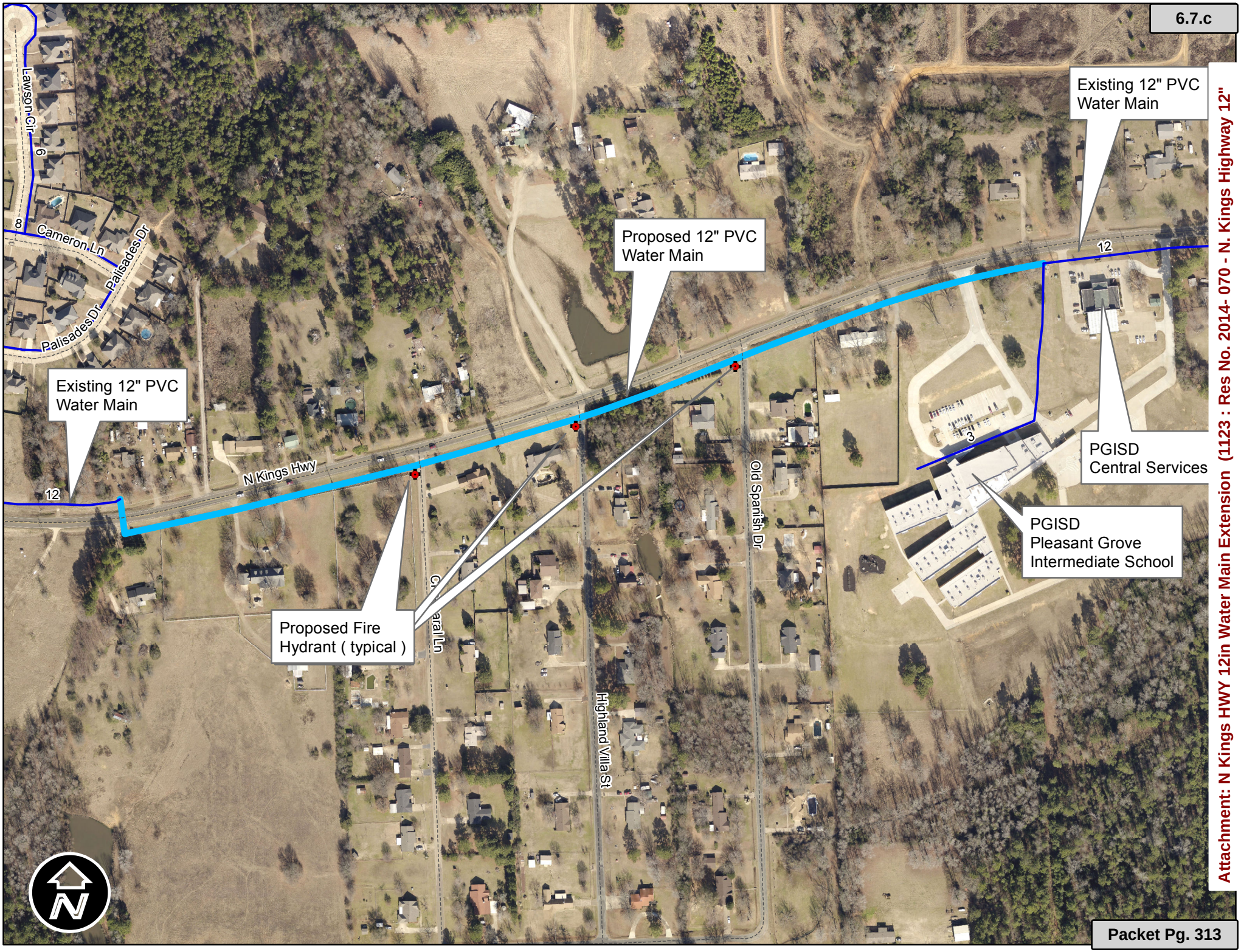

Attachment: N Kings HWY 12in Water Main Extension (1123 : Res No. 2014- 070 - N. Kings Highway 12"

Bid Tabulation
N. KINGS HIGHWAY
12" WATER MAIN EXTENSION
Project No. 62-000-135111-T121425
MAY 13, 2014 @ 2:00

BASE BID:													
				BARNWELL IND.		***KAMPCO, INC***		***RBIS, LLC***		***RORIE STONE CONSTR.***		***DUAL CONSTRUCTION***	
				Queen City, TX.		*Texarkana, TX*		*Texarkana, TX*		*Texarkana, TX*		*Texarkana, TX*	
Item	**Quantity**	**Unit**	**Description**	**Amount**	**Total**	**Amount**	**Total**	**Amount**	**Total**	Amount	Total	Amount	Total
1	1	LS	Mobilization, Bonds & Submittals	$5,379.00	$5,379.00	$6,808.58	$6,808.58	$6,050.00	$6,050.00	$7,000.00	$7,000.00	$16,950.00	$16,950.00
2	2,295	LF	12" PVC C-900 Water Pipe by Open Cut	$35.00	$80,325.00	$25.25	$57,948.75	$22.90	$52,555.50	$22.80	$52,326.00	$25.00	$57,375.00
3	170	LF	12" PVC C-900 Water Pipe by Bore	$50.00	$8,500.00	$71.52	$12,158.40	$63.00	$10,710.00	$56.45	$9,596.50	$96.00	$16,320.00
4	145	LF	12" PVC Certa-Lok Water Pipe by Bore	$72.00	$10,440.00	$84.91	$12,311.95	$81.00	$11,745.00	$67.30	$9,758.50	$108.00	$15,660.00
5	90	LF	12" PVC Certa-Lok Water Pipe inside Casing	$40.00	$3,600.00	$33.30	$2,997.00	$38.00	$3,420.00	$32.50	$2,925.00	$40.00	$3,600.00
6	39	LF	8" PVC C-900 Water Pipe by Open Cut	$25.00	$975.00	$15.16	$591.24	$30.00	$1,170.00	$24.75	$965.25	$134.00	$5,226.00
7	90	LF	20"x0.375" Steel Casing by Bore	$90.00	$8,100.00	$173.69	$15,632.10	$192.50	$17,325.00	$96.50	$8,685.00	$230.00	$20,700.00
8	8	EA	12" Gate Valve with Box	$1,975.00	$15,800.00	$2,199.46	$17,595.68	$1,875.00	$15,000.00	$2,075.00	$16,600.00	$2,350.00	$18,800.00
9	3	EA	8" Gate Valve with Box	$1,125.00	$3,375.00	$2,024.95	$6,074.85	$1,023.00	$3,069.00	$845.00	$2,535.00	$1,400.00	$4,200.00
10	3	EA	6" Gate Valve with Box	$775.00	$2,325.00	$990.61	$2,971.83	$622.00	$1,866.00	$565.00	$1,695.00	$1,100.00	$3,300.00
11	3	EA	New Fire Hydrant Assembly	$2,850.00	$8,550.00	$3,221.33	$9,663.99	$3,165.00	$9,495.00	$2,550.00	$7,650.00	$3,270.00	$9,810.00
12	2	EA	Connect New 12" PVC to Existing 12" PVC	$1,500.00	$3,000.00	$1,717.80	$3,435.60	$550.00	$1,100.00	$550.00	$1,100.00	$3,560.00	$7,120.00
13	1	LS	Clean & Test Water Mains	$2,250.00	$2,250.00	$1,737.35	$1,737.35	$2,833.00	$2,833.00	$1,000.00	$1,000.00	$3,900.00	$3,900.00
14	1	LS	Erosion Control Measures	$1,000.00	$1,000.00	$520.27	$520.27	$660.00	$660.00	$2,000.00	$2,000.00	$1,695.00	$1,695.00
15	1	LS	Trench Protection	$100.00	$100.00	$170.33	$170.33	$110.00	$110.00	$1.00	$1.00	$3,400.00	$3,400.00
16	1	LS	Seeding	$3,500.00	$3,500.00	$1,300.16	$1,300.16	$1,815.00	$1,815.00	$500.00	$500.00	$3,400.00	$3,400.00
			Total Base Bid:		**$157,219.00**		**$151,918.08**		**$138,923.50**		**$124,337.25**		**$191,456.00**

Attachment: Bid tab.xls (1123 : Res No. 2014- 070 - N. Kings Highway 12" Water Main Extension)

City of Texarkana, Texas

Version: C

Briefing Sheet

Update Date: 5/8/2014 1:06 PM

Lead Department: City Manager **Action Officer:** John Whitson, City Manager

Subject: Ordinance No. 2014-054 prohibiting the wearing of pants below the waist inappropriately exposing skin or undergarments (i.e., sagging).

Briefing:	6/23/2014	**Public Hearing:**	5/27/2014	**Second Briefing:**	June 9, 2014	**Council Vote:**	6/23/2014

Item Schedule

Updates/History of Briefing:

NOT APPLICABLE

Executive Summary and Background Information:

Summary: Discussed this item on 14 and 28 APR 14 and by consensus directed staff to prepare an ordinance that would prohibit the wearing of sagging pants in the city of Texarkana, Texas. Staff has been unable to identify any Texas cities that have adopted a similar ordinance and the Texas Municipal League (TML) reports that they have not assisted any cities with development of a proposed ordinance for this purpose. The nearest city with a similar ordinance is Shreveport, Louisiana.

Background: Councilmember Casteel requested discussion on this item and the city council by consensus directed the staff to prepare an ordinance for city council's consideration.

The City of Shreveport, Louisiana Code of Ordinances states:

(a) It shall be unlawful for any person to appear in public wearing pants below the waist which expose the skin or undergarments.
(b) Any violation of subsection (a) shall be cited by the law enforcement officer by the issuance of a citation and summons to appear before a court of proper jurisdiction, and shall itself not be grounds for an arrest or for a full search of the person cited.
(c) Any person convicted of violating the provisions of this section shall be punished by a fine not to exceed $100.00 and up to one eight-hour day picking up trash or refuse, or performing other court-approved community service activities.
(d) Any person convicted of a second offense of violating the provisions of this section shall be punished by a fine not to exceed $150.00 and up to two eight-hour days picking up trash or refuse, or performing other court-approved community service activities.
(e) Any person convicted of a third offense of violating the provisions of this section shall be punished by a fine not to exceed $250.00 and up to four eight-hour days picking up trash or refuse, or performing other court-approved community service activities.

The City of Alexandria, Louisiana Code of Ordinances states:

Sec. 15-128. Appropriate dress for persons in certain public places; public exposure in certain attire prohibited.

(a) On public property (including streets, sidewalks or buses) of the City of Alexandria all persons shall be properly attired whenever they appear in public view.

(b) Pants worn by any person, regardless of age, should be size appropriate and secured at the waist to prevent the pants from falling more than three (3) inches below the hips (crest of the ilium) causing exposure of the person or the person's undergarments.

(c) Fines and civil penalties; community service and counseling:

(1) If a juvenile is determined to be in violation of this section a citation shall be issued to the parent or legal guardian, who has care and control of the minor and he or she shall be subject to in the discretion of a judge a warning to the parent and juvenile or a civil penalty of not less than twenty-five dollars ($25.00) on the first offense and not more than two hundred dollars ($200.00) on each subsequent offense. In addition to the civil penalty, the court may order the juvenile and /or the parent or legal guardian to participate in up to forty (40) hours of court approved community service activities, or a combination of up to forty (40) hours of court approved community service and attendance, by both a parent or legal custodian and the minor, at a court approved family counseling program.

(2) If an adult is determined to be in violation of this section a citation shall be issued to the person and the person shall be subject to a civil penalty of not less than twenty-five dollars ($25.00) on the first offense and not more than two hundred dollars ($200.00) for each subsequent offense. In addition to the civil penalty, the court may order such person to participate in up to forty (40) hours of court approved community service activities, or a combination of up to forty (40) hours of court approved community service and attendance at a court approved counseling program.

(d) Violators of any provision of this section shall be issued a citation and subject to the civil penalties described above. To this end, a violation of this ordinance shall not be deemed a criminal offense; and thus, violators shall not be subject to arrest, imprisonment or other criminal penalty for violation of this section.

<u>Caddo Parish, Louisiana Code of Ordinances states</u>:

Sec. 32-22. Wearing of pants below waist in public.

(a) It shall be unlawful for any person to appear in public wearing pants below the waist which expose the skin or undergarments.

(b) Any violation of subsection (a) hereof shall be cited by the law enforcement officer by the issuance of a citation and summons to appear before a court of proper jurisdiction, and shall, itself, not be grounds for an arrest or for a full search of the person cited.

(c) Any person convicted of violating the provisions of this section shall be punished by a fine not to exceed $100.00 and up to one eight-hour day picking up trash or refuse, or performing other court-approved community service activities.

(d) Any person convicted of a second offense of violating the provisions of this section shall be punished by a fine not to exceed $150.00 and up to two eight-hour days picking up trash or refuse, or performing other court-approved community service activities.

(e) Any person convicted of three or more offenses of violating the provisions of this section shall be punished by a fine not to exceed $250.00 and up to four eight-hour days picking up trash or refuse, or performing other court-approved community service activities.

City of Eunice, Louisiana Code of Ordinances states:

Sec. 14:109. Wearing of pants below the waist in public.

(a) It shall be unlawful for any person on public property, including streets and sidewalks, to wear pants below the waist which expose any part of the buttocks, pubic hair, or undergarments of that person.

(b) It shall be unlawful for any person, regardless of age, to wear pants in a manner that does not prevent the pants from falling more than three (3) inches below the hips (crest of the ileum) causing exposure of any part of the person's buttocks, pubic hair, or the person's undergarments.

(c) Fines and civil penalties, community service and counseling:

(1) If a juvenile is determined to be in violation of this ordinance, a citation shall be issued to the parent or legal guardian who has care and control of the minor and he or she shall be subject to, in the discretion of a judge, a warning to the parent and juvenile or a civil penalty of not less than seventy-five dollars ($75.00) on the first offense and not more than two hundred dollars ($200.00) on each subsequent offense. In addition to the civil penalty, the court may order the juvenile and/or the parent or legal guardian to participate in up to forty (40) hours of court approved community service activities, or a combination of up to forty (40) hours of court appointed community service and attendance by both a parent or legal custodian and the minor, at a court approved family counseling program.

(2) If an adult is determine to be in violation of this section, a citation shall be issued to the person and the person shall be subject to a civil penalty of not less than seventy-five dollars ($75.00) on the first offense and not more than two hundred dollars ($200.00) for each subsequent offense. In addition to the civil penalty, the court may order such person to participate in up to forty (40) hours of court approved community service activities, or a combination of up to forty (40) hours of court approved community service and attendance at a court approved counseling program.

(3) Violators of any provision of this section shall be issued a citation and subject to the civil penalties described above. To this end, a violation of this section shall not be deemed a criminal offense, and thus, violators shall not be subject to arrest, imprisonment or other criminal penalty for violation of this section.

City of Marksville, Louisiana Code of Ordinances states:

Sec. 22-307. Appropriate dress for persons in certain public places; public exposure in certain attire prohibited.

(a) On public property (including streets, sidewalks or buses) of the city, all persons shall be properly attired whenever they appear in public view.

(b) Pants worn by any person, regardless of age, should be size appropriate and secured at the waist to prevent the pants from falling more than three inches below the hips (crest of the ilium) causing exposure of the person or the person's undergarments.

(c) Fines and civil penalties; community service and counseling.

(1) If a juvenile is determined to be in violation of this section, a citation shall be issued to the juvenile and a notice of court shall be issued to the parent or legal guardian who has care and control of the minor, and the juvenile and/or the parent or legal guardian shall be subject to a civil penalty of not less than $100.00 on the first offense and not more than $200.00 on each subsequent offense. In addition to the civil penalty, the court may order the juvenile and/or the parent or legal guardian to participate in up to 40 hours of court approved community service activities, or a combination of up to 40 hours of court-approved community service and attendance, by both a parent or legal custodian and the minor, at a court-approved family counseling program.

(2) If an adult is determined to be in violation of this section, a citation shall be issued to the person and the person shall be subject to a civil penalty of not less than $100.00 on the first offense and not more than $200.00 for each subsequent offense. In addition to the civil penalty, the court may order such person to participate in up to 40 hours of court-approved community service activities, or a combination of up to 40 hours of court-approved service and attendance of a court approved counseling property.

(d) Violators of any provision of this section shall be issued a citation and subject to the civil penalties described above. To this end, a violation of this section shall not be deemed a criminal offense; and thus, violators shall not be subject to arrest, imprisonment or other criminal penalty for violation of this section.

City of Minden, Louisiana Code of Ordinances states:

Sec. 34-170. Indecent exposure/sagging pants.

(a) It is unlawful for any person to perform an obscene act. For the purpose of this section, an "obscene act" is hereby defined as the intentional exposure of the genitals, pubic hair, anus, vulva or female breast nipples in any public place or place open to the public view with the intent of arousing sexual desire or which appeals to prurient interest or is patently offensive.

(b) It shall be unlawful for any person to appear in any public place or place open to the public view wearing pants below the waist which appeals to an obsessive interest in matters of a sexual nature or is patently offensive, nor shall any person wear their pants so low as to expose their skin or undergarments in such a manner that appeals to an obsessive interest in matters of a sexual nature or is patently offensive.

(c) Any person convicted of violating the provisions of this section shall be punished by a fine not exceeding $500.00 and costs or imprisonment for a term not exceeding 180 days or both.

City of Winnfield, Louisiana Code of Ordinances states:

Sec. 15-3. - Dress code for all persons entering upon any part or portion of any recreational facility or the grounds thereof owned and operated by the city.

(a) Upon entering any part or portion of any recreational facility or the grounds thereof owned and operated by the City of Winnfield, Louisiana, all persons shall be properly attired whenever they appear in public view.

(b) Pants worn by any person, regardless of age, should be size appropriate and secured at the waist to prevent pants from failing more than three (3) inches below the hips (crest of the ilium) causing exposure of the person or the person's undergarments.

(c) Fines and civil penalties; community service and counseling:

(1) If a juvenile is determined to be in violation of this section a citation shall be issued to the parent or legal guardian who has care and control of the minor and he or she shall be subject to, in the discretion of a judge, a warning to the parent and juvenile or a civil penalty of not less than twenty-five dollars ($25.00) on the first offense and not more than two hundred dollars ($200.00) on each subsequent offense. In addition to the civil penalty, the court may order the juvenile and/or the parent or legal guardian to participate in up to forty (40) hours of court-approved community service activities, or a combination of up to forty (40) hours of court-approved community service and attendance, by both a parent or legal guardian and the minor, at a court-approved family counseling program.

(2) If an adult is determined to be in violation of this section a citation shall be issued to the person and the person shall be subject to a civil penalty of not less than twenty-five dollars ($25.00) on the first offense and not more than two hundred dollars ($200.00) for each subsequent offense. In addition to the civil penalty, the court may order such person to participate in up to forty (40) hours of court-approved community service activities, or a combination of up to forty (40) hours of court-approved community service and attendance at a court-approved counseling program.

(d) Violators of any provision of this section shall be issued a citation and subject to the civil penalties described above. To this end, a violation of this section shall not be deemed a criminal offense; and thus, violators shall not be subject to arrest, imprisonment or other criminal penalty for violation of this section, however a failure to pay a penalty as provided herein may be subject to contempt of court.

Potential Options:

- Adopt Ordinance as written
- Adopt an amended ordinance
- Not Adopt the ordinance or an amended ordinance

Fiscal Implications:

Patrol officer time to enforce once complaint is received.

Staff Recommendation:

Staff recommends denial of the proposed ordinance. The police department works diligently and seriously to maintain a good rapport in neighborhoods throughout the city. Adoption of an ordinance

designed to regulate the manner of citizen dress may be interpreted as infringement on personal rights of expression and other freedoms or discrimination.

City Prosecutor: I would not recommend that the City adopt a sagging pants ordinance. Such an ordinance could be challenged for violating the First Amendment of the Constitution (free speech/expression), violating the Fourteenth Amendment of the Constitution (equal protection), being preempted by state law regarding indecent exposure, and being an invalid exercise of the city's police power under state law. Similar ordinances have been ruled unconstitutional in Florida and New York. It should be noted that no other Texas city has adopted such an ordinance.

The American Civil Liberties Union has actively opposed the adoption of such ordinances in many states. Included in your information on this agenda item is an Open Letter to the Terrebonne Parrish Council Regarding Proposed Sagging Pants Ordinance. While Texas and Louisiana law differ in some regards, this letter is a good place to start in understanding the legal issues at hand. ACLU – Open Letter to the Terrebonne Parish Council Regarding Proposed Saggy Pants Ordinance, www.laaclu.org/press/2013/040413.htm

Advisory Board/Committee Review:

NONE

Board/Committee Recommendation:

NOT APPLICABLE

Advisory Board/Committee Meeting Date and Minutes:

NOT APPLICABLE

Attachments

a. Goals and Perspectives (DOCX)
b. 2014-054 ORD Prohibiting Wearing of Sagging Pants version 2 (PDF)

Staff Coordination

City Manager	John Whitson	Department Head Review	Completed	05/01/2014 2:24 PM
Police	Dan Shiner	Review	Completed	05/01/2014 3:39 PM
Municipal Prosecutor	Deborah Jones	Review	Completed	05/05/2014 12:15 PM
Public Information Officer	Lisa Thompson	PIO Review	Completed	05/05/2014 12:53 PM
City Manager	Shirley Jaster	City Manager Review	Completed	05/05/2014 3:20 PM
City Council	Jennifer Evans	Meeting	Completed	05/28/2014 1:27 PM

Meeting History

05/12/14 City Council MOVED FORWARD Next: 05/27/14

City Manager Whitson briefed this item and stated that staff does not recommend the adoption of this proposed ordinance. Councilmember Casteel spoke in support of adopting this proposed ordinance.

City of Texarkana, Texas

Developing Perspectives and Goals Pending Approval by the City Council:

Perspectives	Goals
Serve the Community	☐ Promote an Environmentally Sensitive & Livable Community ☑ Provide a Safe Community ☐ Deliver Quality Services ☑ Foster a Healthy Community
Run the Operations	☐ Enhance Community Preparedness & Responsiveness ☐ Maximize Partnership Opportunities ☐ Provide Courteous & Responsive Customer Service ☐ Model a Positive City Image ☐ Deliver Efficient Services ☐ Cultivate Community Involvement & Access
Manage the Resources	☐ Maintain Fiscal Strength ☐ Maximize Utilization & Resources ☐ Invest in Infrastructure & Transportation
Develop Personnel	☐ Develop a Skilled & Diverse Workforce ☐ Create a Positive & Rewarding Work Culture

Perspectives and Goals Additional Comments:

NONE

Resource Impact:

Staff time required if item is approved:	Low

Other Potential Impacts:

NONE APPLICABLE

Public Information Plan:

☐	Newspaper Notice (Required by Statute)	☐	Public Hearing (Required by Statute)
☐	Public Forum/Input Session	☑	Press Release
☑	E-News Distribution	☑	Website Notice
☑	Social Media (Twitter, Facebook, etc.)	☐	Special Mailing
☐	Flyers Posted	☐	Banners Posted
☐	Survey	☐	Automated Phone Call
☐	None Required	☐	

Other:

Attachment: Goals and Perspectives (1097 : Ord. No. 2014-054 Prohibit the Wearing of Sagging Pants)

ORDINANCE NO. 2014 - 054

AN ORDINANCE OF THE CITY COUNCIL OF THE CITY OF TEXARKANA, TEXAS, AMENDING CHAPTER 15, OFFENSES AND MISCELLANEOUS PROVISIONS; OF THE TEXARKANA CITY CODE BY PROHIBITING THE WEARING OF SAGGING PANTS; PROVIDING DEFENSES; PROVIDING FOR A PENALTY CLAUSE; PROVIDING FOR PUBLICATION; PROVIDING FOR A REPEALER CLAUSE; PROVIDING A SEVERABILITY CLAUSE; AND ESTABLISHING AN EFFECTIVE DATE.

WHEREAS, the wearing of pants situated below the waist and exposing skin or undergarments (otherwise referred to as "Sagging") is consider by some in the community to be offensive or disrespectful to the observer; and

WHEREAS, those in the community who find the practice of "Sagging" to be offensive want the wearing of pants below the waist line to be prohibited in public places throughout the city;

NOW, THEREFORE, BE IT ORDAINED BY THE CITY COUNCIL OF THE CITY OF TEXARKANA, TEXAS:

SECTION 1: Chapter 15 of the Texarkana City Code is hereby amended as follows:

Add **Sec. 15-21 Wearing of Sagging Pants in Public Prohibited.**

(a) It shall be unlawful for any person to appear in a public place wearing pants below their hips which exposes the skin or undergarments.

(b) On private property open to the public, a citation shall only be issued upon request of the property owner, proprietor of a business, or an employee thereof and only after a request for compliance with subsection (a) and/or that the person leave the premises has been made and the person refuses to comply.

(c) Enforcement of this section shall only be by issuance of a citation from a peace officer.

(d) Any person convicted of violating this section shall be punished by a fine not to exceed $200.00.

SECTION 2: That the City Secretary be and is hereby directed to publish the caption of this Ordinance for three (3) successive days in the Texarkana Gazette within ten (10) days of the passage of this Ordinance, as provided in Article XI, Section 3 of the Charter of the City of Texarkana, Texas.

SECTION 3: That in case a section, clause, sentence or part of this Ordinance shall be deemed or adjudged by a Court of competent jurisdiction to be invalid, then such invalidity shall not affect, impair or invalidate the remainder of this Ordinance.

SECTION 4: That all ordinances or parts of ordinances in conflict herewith are specifically repealed to the extent of such conflict.

Attachment: 2014-054 ORD Prohibiting Wearing of Sagging Pants version 2 (1097 : Ord. No. 2014-054 Prohibit the Wearing of Sagging Pants)

SECTION 5: That this Ordinance shall be in full force and effect ten (10) days after its passage an approval.

PASSED AND APPROVED in Regular Council Session on this the ___ day of ___, 2014.

ATTEST:

_____ _____

JENNIFER EVANS, CITY SECRETARY BOB BRUGGEMAN, MAYOR

Attachment: 2014-054 ORD Prohibiting Wearing of Sagging Pants version 2 (1097 : Ord. No. 2014-054 Prohibit the Wearing of Sagging Pants)

City of Texarkana, Texas

Version: F

Briefing Sheet

Update Date: 5/8/2014 1:22 PM

Lead Department: Water Utilities **Action Officer:** John Murhpy, Supervisor

Subject: Resolution No. 2014-057 authorizing the City Manager to purchase one (1) Vac-Con PD Combination Unit for Texarkana Water Utilities in an amount not to exceed $309,770.20.

Briefing: 5/27/2014	**Public Hearing:** 5/27/2014	**Second Briefing:** June 9, 2014	**Council Vote:** 6/23/2014

Item Schedule

Schedule 1: Brief twice - vote once (six weeks)

Updates/History of Briefing:

NOT APPLICABLE

Executive Summary and Background Information:

Consider a resolution authorizing the City Manager to purchase one (1) Vac-Con PD Combination Unit, through the Buy Board, from Austin Freightliner, Austin TX, 78721, in an amount not to exceed $ 309,770.20, with the Texas Portion being $ 192,646.08. Texarkana Water Utilities reviewed pricing from several manufacturers for the Purchase of one (1) Combination Vac-Jet Unit. It was determined that the most cost effective purchase would be by using the Buy Board at $ 309,770.20. This price includes the BuyBoard applicable fees. The BuyBoard is a local government purchasing cooperative administered by the Texas Association of School Boards. We have purchased from the BuyBoard on previous occasions. Purchase from the BuyBoard meets all bidding requirements.

Potential Options:

- None
-

Fiscal Implications:

Funds are available; this project was budgeted in the Utility's 2013-2014 Equipment Acquisition Fund. $310,000.00 was budgeted for this project.

Staff Recommendation:

Texarkana Water Utilities staff recommends approval of the purchase in an amount not to exceed $ 309,770.20, with the Texarkana, Texas amount not to exceed $192,646.08.

Advisory Board/Committee Review:

None

City of Texarkana, Texas

Board/Committee Recommendation:

Not Applicable

Advisory Board/Committee Meeting Date and Minutes:

Not Applicable

Attachments

a. Goals and Perspectives (DOCX)
b. Buy Board Proposal (PDF)
c. Resolution No. 2014-057 Vac Jet (DOCX)

Staff Coordination

Water Utilities	Bill King	Water Utilities Review	Completed	05/01/2014 10:46 AM
TWU Finance	Jim Cornelius	TWU Finance Review	Completed	05/01/2014 10:58 AM
Finance	Charlie Bassett	Finance Review	Completed	05/05/2014 10:59 AM
Public Information Officer	Lisa Thompson	PIO Review	Completed	05/05/2014 11:04 AM
City Manager	John Whitson	City Manager Review	Completed	05/05/2014 11:19 AM
City Council	Jennifer Evans	Meeting	Completed	05/28/2014 1:27 PM

Meeting History

05/12/14 City Council MOVED FORWARD Next: 05/27/14
Bill King, Executive Director of Texarkana Water Utilities, briefed this item.

City of Texarkana, Texas

Developing Perspectives and Goals Pending Approval by the City Council:

Perspectives		Goals
Serve the Community	☑	Promote an Environmentally Sensitive & Livable Community
	☐	Provide a Safe Community
	☑	Deliver Quality Services
	☐	Foster a Healthy Community
Run the Operations	☐	Enhance Community Preparedness & Responsiveness
	☐	Maximize Partnership Opportunities
	☑	Provide Courteous & Responsive Customer Service
	☑	Model a Positive City Image
	☐	Deliver Efficient Services
	☐	Cultivate Community Involvement & Access
Manage the Resources	☐	Maintain Fiscal Strength
	☑	Maximize Utilization & Resources
	☐	Invest in Infrastructure & Transportation
Develop Personnel	☐	Develop a Skilled & Diverse Workforce
	☐	Create a Positive & Rewarding Work Culture

Perspectives and Goals Additional Comments:

(None)

Resource Impact:

Staff time required if item is approved:	Select One By Clicking Here

Other Potential Impacts:

"NONE APPLICABLE"

Public Information Plan:

☐	Newspaper Notice (Required by Statute)	☐	Public Hearing (Required by Statute)
☐	Public Forum/Input Session	☐	Press Release
☐	E-News Distribution	☐	Website Notice
☐	Social Media (Twitter, Facebook, etc.)	☐	Special Mailing
☐	Flyers Posted	☐	Banners Posted
☐	Survey	☐	Automated Phone Call
☑	None Required	☐	

Other:

Attachment: Goals and Perspectives [Revision 1] (1101 : Res.No. 2014-057 Combination Vac/Jet Truck)

FREIGHTLINER

VAC-CON
MORE POWER TO YOU

Date 3/20/2014

Authorized State of Texas Dealer:
CLS Sewer Equipment Co.,Inc.
726 So. Sherman St.
Richardson, TX 75081

Number 12974
Type of Quote Dual
PO
Attn Jerry Sonnier

Buyboard Proposal

Retail Purchaser Texarkana Water Utilities Texarkana, Texas Ship To

Comments

TOTAL HORSEPOWER 490 HP COMBINED/Delivery Less Than 60 Days

(1) Purchase Order Made to : Austin Freightliner (Buyboard).

Model Number - V PD3690H/1000 (824 at 18") L H A -O G

Main Information

Model	PD3690H/1000 18"@3600CFM ROOT BLOWER (824 at 18")
Blower	Hydrostatic Drive (Operates in Neutral)
Boom	10' Aluminum Telescoping Boom with Pendant Control Station
Hose Reel	Front Mounted, Articulating to Driver Side, 800' (1") Capacity
Jet Rodder Hose	1000' x 3/4" 3000 psi/7500 psi - 600' extra (non-continuous)
Water System	50 gpm/3000 psi Pump - 10-Cylinder WSG-1068 Gas
Water Pump	FMC Made in TEXAS
Auxiliary Engine	John Deere 4045 140HP Tier III

Other Items

Qty	Description
1	
1	Debris Body "Power Flush" System, 8 jets
1	6" Knife Valve with lever action, in Lieu of 5" Butterfly Valve
1	Rear splash guard (4 - 8 O'clock) - tank mounted
1	Winter Recirculating System for Rodder Hose
1	Air Purge System
1	1/4 turn ball valve water drain (cannot choose both 2-1/2" gate valve and 1/4 turn ball valve, only choose one)
1	Lazy Susan Pipe Rack (Holds 5 Pipes, will not fit when unit has a 6 cyl aux engine)
1	Storage Box Behind Cab 16" x 42" x 96"
1	Revolving Light with Guard, Rear Debris Tank Door Mounted
1	LED 4 Strobes - (2) front bumper / (2) rear bumper
1	LED Arrow Board, Rear Debris Tank Door Mounted
1	Boom Mounted Flood Lights

Attachment: Buy Board Proposal (1101 : Res.No. 2014-057 Combination Vac/Jet Truck)

1 Rear Mounted Flood Lights
1 Flood Light - Water Pump Work Area
1 ICC - LED Lighting Package
1 Back Up Alarm
1 50' Capacity Retractable Hand Gun Hose Reel
1 Hydroexcavation package includes: 50' retractable handgun hose reel wtih 50' of 1/2" high pressure hose, HP/Quick disconnect, heavy duty HP unloader valve, main control ball valve, 48" x 1/2" stainless steel lance with adjustable grip and horizontal spray
1 6' x 8" Aluminum Pipe Extension 800-0089
1 8" Quick Clamp, spare, 680-0015
1 Cone Storage Rack
1 Auxiliary Engine Remote Oil Drain

1 Paint: To be advised
1 Omnibus-2 Electronic Controller System-Color Monitor
1 Omnibus Footage Counter
1 1" to 3/4" Bushing for Chain Scraper
1 John Deere 4 Cylinder Diesel Option 140 HP @ 2400 RPM 275 CID Tier 3 Flex (if available)
1 FMC Water Pump Option: 30/3000, 60/2000, 65/3000, 80/2000, 80/2500

Truck Chassis Information

Pool Truck Chassis Model **Freightliner 114SD 350HP ISL with 1150 ft. lbs. / 3000RDS / 43,000 LB GVWR**
4x2 *Pool Trucks are subject to availability.*

Qty	Description
1	2014 FREIGHTLINER SD114 350HP CUMMINS/ ALLISON AUTO 6SPD 43,000GVWR

Freightliner/Chassis	$89,800.00
Machine Total	$217,445.20
Delivery	$2,525.00
Total	**$309,770.20**

Offered by: JERRY SONNIER

Accepted by:_____

Attachment: Buy Board Proposal (1101 : Res.No. 2014-057 Combination Vac/Jet Truck)

FREIGHTLINER OF AUSTIN

1701 Smith Rd. (Hwy. 183 So.)
Austin, Texas 78721
Bus: 512-389-0000
FAX: 512-389-2663
Wats: 1-800-395-2005

INV.

PURCHASING NAME			TELEPHONE
TEXARKANA WATER UTILITIES			903-798-3880
ADDRESS	CITY	STATE	ZIP CODE
801 WOOD ST.	TEXARKANA	TX	75501

I/We Hereby Purchase from You, Under the Terms and Conditions Specified, the Following:

YEAR	MAKE	MODEL/BODY	VIN	LICENSE PLATE
2014	FREIGHTLINER	114SD	ORDER	

A documentary fee is not an official fee, a documentary fee is not required by law but may be charged to buyers for handling documents and performing services relating to the the closing of a sale. Buyers may avoid payment of the fee to the seller by handling the documents and performing the services relating to the closing of the sale. A documentary fee may not exceed $50.00. This notice is required by law.

El cobro documental no es un cobro oficial. El cobro documental no es un requisito bajo la ley, pero se le puede cobrar. Al comprador por el rendimiento de los servicios relacionados con la completacion de la venta y por completar los documentos. El comprador puede evitar el pago al vendedor de este costo si el comprador mismo se encarga de mandejar los documentos y de los servicios necesarios para la completacion de la venta. El cobro documental no puede sobrepasar los $50.00 (U.S.) Este aviso es requerido bajo la ley.

Disclaimer of Warranties

Any warranties on the products sold hereby are those made by the factory. The Seller, *Freightliner of Austin*, hereby expressly disclaims all warranties, either expressed or implied including any implied warranty of merchantability or fitness for a particular purpose, and *Freightliner of Austin, neither* assumes nor authorizes any other person to assume for it any liability in connection with the sale of this vehicle.

MILEAGE:	
BUY BOARD CONTRACT #430-13	
CHASSIS SELLING PRICE	$ 89,400.00
VAC-CON V PD3690H/1000 (824 AT 18") L HA-OG	$ 219,970.20
***DELIVERY/TRAINING INCLUDED	
BUY BOARD FEE	$ 400.00

CUSTOMER SIGNATURE

SALESMAN SIGNATURE KEVIN KRIEG

CONTRACTUAL DISCLOSURE STATEMENT FOR USED VEHICLE ONLY. "The information you see on the window form for this vehicle is part of this contract. Information on the window form overrieds any contrary provisions in the contract of sale."

MILEAGE:			TRADE-IN	
YEAR	MAKE	MODEL/BODY	VIN	LICENSE PLATE
MILEAGE:			TRADE-IN	
YEAR	MAKE	MODEL/BODY	VIN	LICENSE PLATE

			$ 309,770.20
PAYOFF TO:			N/A
ADDRESS:		Trading Difference	N/A
TELEPHONE: / FAX:		Sales Tax	N/A
GOOD UNTIL:		Vehicle Inventory Tax	N/A
QUOTED BY:		License Fee	N/A
SHOW LIEN TO:	Body Type:	Documentary Fee	N/A
ADDRESS:	License Wt.:	Federal Excise Tax	N/A
	State Insp.:		$ 309,770.20
DATED: LIEN AMOUNT $	License:	Payoff on Trade	
DRAFT FOR $	Title:	Ext. Service Agreement	
DRAFT THRU:	Transfer:	Less Deposit	
ADDRESS:			$ 309,770.20

Full disclosure required by federal regulation "Z", The Consumer Protection Act and The Texas Consumer Credit Code, will be made prior to consummation of a credit sale. This written order comprises the entire agreement pertaining to this purchase and no other agreement of any kind, verbal understanding or promise whatsoever, will be recognized. It is expressly agreed that the purchaser acquires no right, title or interest in or to the property which he agrees to purchase hereunder until such property is delivered to him/her and either the full price is paid in cash or satisfactory deferred payment agreement is executed by the parties hereto, the terms of which shall thereafter be controlling, and a clear title is furnished to dealer for the used cars or trucks involved, if any. THIS IS NOT A CONDITIONAL SALES CONTRACT, BUT IS A BUYER'S ORDER. All new vehicles carry the standard factory warranty. It is understood there is no guarantee on the above described new or used vehicle other than appears on this Buyer's Order. Mileage, if used vehicle model is not guaranteed and a verbal agreement by the Salesman will not be considered binding on the Seller. It is agreed that neither Freightliner of Austin nor the manufacturer will be

Attachment: Buy Board Proposal (1101 : Res.No. 2014-057 Combination Vac/Jet Truck)

RESOLUTION NO. 2014-057

A RESOLUTION OF THE CITY COUNCIL OF THE CITY OF TEXARKANA, TEXAS, AUTHORIZING THE CITY MANAGER TO ISSUE A PURCHASE ORDER TO AUSTIN FREIGHTLINER OF CARROLLTON, TEXAS, FOR THE PURCHASE OF A ONE (1) COMBINATION VAC-JET UNIT THROUGH THE GOVERNMENT BUYBOARD IN AN AMOUNT NOT TO EXCEED THREE HUNDRED NINE THOUSAND SEVEN HUNDRED SEVENTY AND 20/100 DOLLARS ($309,770.20) WITH THE TEXARKANA, TEXAS PORTION IN AN AMOUNT NO TO EXCEED ONE HUNDRED NINETY-TWO THOUSAND SIX HUNDRED FORTY-SIX AND 08/100 DOLLARS ($192,646.08); AND ESTABLISHING AN EFFECTIVE DATE.

WHEREAS, staff for Texarkana Water Utilities has indicated a need to replace an older Jet Truck in their operations; and

WHEREAS, staff, through the City's Interlocal Agreement with the Texas Local Government Purchasing Cooperative (Ord. #242-2002) which authorizes purchases from the web-based cooperative purchasing program known as "BuyBoard", have determined that Austin Freight Liner of Carrollton, Texas can provide a cost efficient price for the desired Combination Vac-Jet Unit in an amount not to exceed THREE HUNDRED NINE THOUSAND SEVEN HUNDRED SEVENTY AND 20/100 ($309,770.20) with the Texarkana, Texas portion in an amount not to exceed ONE HUNDRED NINETY-TWO THOUSAND SIX HUNDRED FORTY-SIX AND 08/100 DOLLARS ($192,646.08); and

WHEREAS, the funds were budgeted in the Texarkana Water Utilities 2013-2014 Budget at THREE HUNDRED TEN THOUSAND AND NO/100 DOLLARS ($310,000.00) in the Utility Equipment Acquisition Fund.

NOW, THEREFORE, BE IT RESOLVED BY THE CITY COUNCIL OF THE CITY OF TEXARKANA, TEXAS:

SECTION 1: That the City Manager be and is hereby authorized to issue a purchase order to Austin Freight Liner of Carrollton, Texas for one (1) Combination Vac-Jet Unit through the government Buy Board in an amount not to exceed THREE HUNDRED NINE THOUSAND SEVEN HUNDRED SEVENTY AND 20/100 ($309,770.20) with the Texarkana, Texas portion in an amount not to exceed ONE HUNDRED NINETY-TWO THOUSAND SIX HUNDRED FORTY-SIX AND 08/100 DOLLARS ($192,646.08).

SECTION 2: That this Resolution shall be in full force and effect from and after its passage and approval.

PASSED AND APPROVED in Regular Council Session on this 23rd day of June, 2014.

ATTEST:

_____ _____

JENNIFER EVANS, CITY SECRETARY BOB BRUGGEMAN, MAYOR

Attachment: Resolution No. 2014-057 Vac Jet [Revision 5] (1101 : Res.No. 2014-057 Combination Vac/Jet Truck)

City of Texarkana, Texas

Version: E

Briefing Sheet

Update Date: 5/20/2014 4:23 PM

Lead Department: Water Utilities **Action Officer:** Gary Smith,

Subject: Resolution No. 2014-058 authorizing the City Manager to purchase a Sprinter Cargo Van equipped with an Rovver X Truck Camera System for the Texarkana Water Utilities in an amount not to exceed $164,995.00 with the Texarkana, Texas portion not to exceed $102,610.39.

Briefing:	5/27/2014	**Public Hearing:**	5/27/2014	**Second Briefing:**	June 9, 2014	**Council Vote:**	6/23/2014

Item Schedule

Schedule 1: Brief twice - vote once (six weeks)

Updates/History of Briefing:

NOT APPLICABLE

Executive Summary and Background Information:

Texarkana Water Utilities researched several camera systems and vehicles to house these systems. Five companies demonstrated the operation of their camera systems in the field on the Utilities sewer system. The Utility reviewed pricing from several of these companies. It was determined that the most cost effective purchase would be the purchase of one (1) Sprinter Cargo Van equipped with an Rovver X Truck Camera System through the Buy Board at $164,995.00 with the Texas portion being $102,610.39. This price includes the Buy Board applicable fees. The BuyBoard is a local government purchasing cooperative administered by the Texas Association of School Boards. We have purchased from the BuyBoard on previous occasions. Purchase from the BuyBoard meets all bidding requirements. This new van and camera system will replace a 1993 Ford Van with 12 year old camera system. The old system will be maintained and used as a backup system.

Potential Options:

- None
-

Fiscal Implications:

This project was budgeted in the Utility's 2013-2014 Equipment Acquisition Fund. $165,000 was budgeted for this project.

Staff Recommendation:

Texarkana Water Utilities staff recommends approval.

Advisory Board/Committee Review:

NONE

Board/Committee Recommendation:

City of Texarkana, Texas

NOT APPLICABLE

Advisory Board/Committee Meeting Date and Minutes:

NOT APPLICABLE

Attachments

a. Goals and Perspectives (DOCX)
b. Res No. 2014-058 Spriner Cargo Van (DOC)
c. BuyBoard Proposal (PDF)

Staff Coordination

Water Utilities	JD Phillips	Review	Completed	05/01/2014 2:54 PM
Water Utilities	Bill King	Water Utilities Review	Completed	05/01/2014 3:01 PM
TWU Finance	Jim Cornelius	TWU Finance Review	Completed	05/01/2014 3:13 PM
Finance	Charlie Bassett	Finance Review	Completed	05/05/2014 11:19 AM
Public Information Officer	Lisa Thompson	PIO Review	Completed	05/05/2014 11:28 AM
City Manager	John Whitson	City Manager Review	Completed	05/05/2014 11:49 AM
City Council	Jennifer Evans	Meeting	Completed	05/28/2014 1:27 PM

Meeting History

05/12/14 City Council MOVED FORWARD Next: 05/27/14
Bill King briefed this item.

City of Texarkana, Texas

Developing Perspectives and Goals Pending Approval by the City Council:

Perspectives	Goals
Serve the Community	☐ Promote an Environmentally Sensitive & Livable Community ☐ Provide a Safe Community ☑ Deliver Quality Services ☐ Foster a Healthy Community
Run the Operations	☐ Enhance Community Preparedness & Responsiveness ☐ Maximize Partnership Opportunities ☐ Provide Courteous & Responsive Customer Service ☐ Model a Positive City Image ☑ Deliver Efficient Services ☐ Cultivate Community Involvement & Access
Manage the Resources	☐ Maintain Fiscal Strength ☑ Maximize Utilization & Resources ☐ Invest in Infrastructure & Transportation
Develop Personnel	☐ Develop a Skilled & Diverse Workforce ☐ Create a Positive & Rewarding Work Culture

Perspectives and Goals Additional Comments:

"NONE"

Resource Impact:

Staff time required if item is approved:	Select One By Clicking Here

Other Potential Impacts:

"NONE APPLICABLE"

Public Information Plan:

☐	Newspaper Notice (Required by Statute)	☐	Public Hearing (Required by Statute)
☐	Public Forum/Input Session	☐	Press Release
☐	E-News Distribution	☐	Website Notice
☐	Social Media (Twitter, Facebook, etc.)	☐	Special Mailing
☐	Flyers Posted	☐	Banners Posted
☐	Survey	☐	Automated Phone Call
☑	None Required	☐	

Other:

Attachment: Goals and Perspectives (1103 : Res. No. 058 Sprinter Van with Camera System (#1103))

RESOLUTION NO. 2014 - 058

A RESOLUTION OF THE CITY COUNCIL OF THE CITY OF TEXARKANA, TEXAS, AUTHORIZING THE CITY MANAGER TO ISSUE A PURCHASE ORDER TO FREIGHTLINER OF AUSTIN, TEXAS FOR THE PURCHASE OF A ONE (1) SPRINTER CARGO VAN EQUIPPED WITH AN ROVVER X TRUCK CAMERA SYSTEM AND THROUGH THE GOVERNMENT BUY BOARD IN AN AMOUNT NOT TO EXCEED ONE HUNDRED SIXTY FOUR THOUSAND NINE HUNDRED NINETY FIVE AND NO/100 DOLLARS ($164,995.00) WITH THE TEXARKANA, TEXAS PORTION IN AN AMOUNT NOT TO EXCEED ONE HUNDRED TWO THOUSAND SIX HUNDRED TEN AND 39/100 DOLLARS ($102,610.39); AND ESTABLISHING AN EFFECTIVE DATE.

WHEREAS, staff for Texarkana Water Utilities has indicated a need to replace an older van and camera system; and

WHEREAS, staff, through the City's Interlocal Agreement with the Texas Local Government Purchasing Cooperative (Ord. #242-2002) which authorizes purchases from the web-based cooperative purchasing program known as "BuyBoard", have determined that Freightliner of Austin, Texas can provide a cost efficient price for the desired Sprinter Cargo Van equipped with an Rovver X Truck Camera System in an amount not to exceed ONE HUNDRED SIXTY FOUR THOUSAND NINE HUNDRED NINETY FIVE AND NO/100 DOLLARS ($164,995.00) with the Texarkana, Texas portion in an amount not to exceed ONE HUNDRED TWO THOUSAND SIX HUNDRED TEN AND 39/100 DOLLARS ($102,610.39); and

WHEREAS, the funds were budgeted in the Texarkana Water Utilities 2013-2014 Budget at ONE HUNDRED SIXTY FIVE THOUSAND AND NO/100 DOLLARS ($165,000.00) in the Utility Equipment Acquisition Fund.

NOW, THEREFORE, BE IT RESOLVED BY THE CITY COUNCIL OF THE CITY OF TEXARKANA, TEXAS:

SECTION 1: That the City Manager be and is hereby authorized to issue a purchase order to Freightliner of Austin, Texas for a one (1) Sprinter Cargo Van equipped with an Rovver X Truck Camera System through the government "BuyBoard" in an amount not to exceed ONE HUNDRED SIXTY FOUR THOUSAND NINE HUNDRED NINETY-FIVE AND NO/100 DOLLARS ($164,995.00) with the Texarkana, Texas portion in an amount not to exceed ONE HUNDRED TWO THOUSAND SIX HUNDRED TEN AND 39/100 DOLLARS ($102,610.39).

SECTION 2: That this Resolution shall be in full force and effect from and after its passage and approval.

PASSED AND APPROVED in Regular Council Session on this the 23rd day of June, 2014.

ATTEST:

_____ _____

JENNIFER EVANS, CITY SECRETARY BOB BRUGGEMAN, MAYOR

Attachment: Res No. 2014-058 Spriner Cargo Van [Revision 4] (1103 : Res. No. 058 Sprinter Van with Camera System (#1103))

FREIGHTLINER OF AUSTIN

1701 Smith Rd.
Austin, Texas 78721
Bus: 512-389-0000
FAX: 512-389-2663

INV.

BUYER'S ORDER

PURCHASER NAME			TELEPHONE	
Texarkana Water Utilities			903-798-3800	
ADDRESS	CITY	STATE	ZIP CODE	
801 Wood St	Texarkana	TX	75501	
YEAR	MAKE	MODEL/BODY	VIN	LICENSE PLATE
2014	Freightliner	F2CA170 Cargo Van	TBD	

A DOCUMENT FEE IS NOT AN OFFICIAL FEE. A DOCUMENT FEE IS NOT REQUIRED BY LAW, BUT MAY BE CHARGED TO BUYER FOR HANDLING DOCUMENTS RELATING TO THE SALE. A DOCUMENT FEE MAY NOT EXCEED A REASONABLE AMOUNT AGREED TO BY THE PARTIES. THIS NOTICE IS REQUIRED BY LAW.

UN CARGO DOCUMENTAL NO ES UN CARGO OFFICIAL LA LEY NO EXIGE QUE SE IMPONGA UN CARGO DOCUMENTAL. PERO ESTE PODRIA COBRARSE A LOS COMPRADORES POR EL MANEJO DE LA DOCUMENTACION EN RELACION CON LA VENTA. UN CARGO DOCUMENTAL NO PUEDI EXCEDER UNA CANTIDAD RAZONABLE ACORDADA POR LAS PARTIES, ESTA NOTIFICACION SE EXIGE POR LEY.

Disclaimer of Warranties

The above described vehicle sold by Freightliner of Austin is sold as is, without either express or implied warranties of any kind by Freightliner of Austin, including warranties of merchantability or fitness, and Buyer will bear the entire expense of repairing or correcting any defects that presently exist or that may occur in the vehicle, unless a written warranty by, or service contract with Freightliner of Austin covering the describe vehicle is delivered to Buyer in conjunction with or within 90 days following the time of sale, but such vehicle or any of its component parts may be subject to warranty by the manufacturer thereof.

MILEAGE: TBD	
2014 Buyboard Contract #430-13	
BUYBOARD PRICE, VAN	$44,515.00
ATTACHED SPECIFICATION "4/15/2014 16:17:38"	
DELIVERED TO LOS ANGELES, CA, FOR PICKUP BY INSTALLER	
GREEN EQUIPMENT CO. ROVVER X TRUCK SYSTEM	$120,080.00
DELIVERED PER QUOTE # 020040	
QUOTE DATE 4/29/2014	
DELIVERED TO TEXARKANA, TX, TO CUSTOMER	
BUYBOARD FEE	400.00

MILEAGE:			TRADE-IN	
YEAR	MAKE	MODEL/BODY	VIN	LICENSE PLATE
MILEAGE:			TRADE-IN	
YEAR	MAKE	MODEL/BODY	VIN	LICENSE PLATE

PAYOFF TO:		TOTAL	$164,995.00
ADDRESS:		Trade Allowance	
		Taxable Difference	
		Sales Tax	
GOOD UNTIL:		Dealer's Inventory Tax	
QUOTED BY:		License Fee	
	Body Type:	Documentary Fee	
	License Wt.:	Federal Excise Tax	
	State Insp.:	TOTAL SALE PRICE	$164,995.00
DATED: LIEN AMOUNT $	License:	Payoff on Trade	
DRAFT FOR $	Title:	Ext. Service Agreement	
DRAFT THRU:	Transfer:	Less Deposit	
ADDRESS:		Total Balance Due	$164,995.00

**The Dealer's Inventory Tax charge is intended to reimburse the dealer for ad valorem taxes on its motor vehicle inventory. The charge, which is paid by the dealer to the county tax assessor-collector, is not a tax imposed on a consumer by the government, and is not required to be charged by the dealer to the consumer.

The information you see on the window form for this vehicle is part of this contract. Information on the window form overrides any contrary provisions on the contract of sale.

La informacion que aparece en la ventanilla de este vehiculo forma parte de este contrato. La informacion contenida en el formulario de la ventanilla anula cualquier prevision que establezca lo contrario y quy aparezca en el contrato de venta. If a credit purchase,this is an offer to purchase only. Buyer offers to purchase vehicle on credit terms described herein and no contractual relationship is created. This order does not constitute an agreement for the extension of credit. Manufacturer/Distributor reserves the right to change the price of new vehicles to Seller without notice. In the event that the price to Seller of the new vehicle ordered hereunder is changed prior to delivery to Buyer, Buyer agrees and accepts that the cash delivered price will be changed accordingly. If the Buyer's used vehicle trade-in is not delivered to the Seller until delivery of the new vehicle, the trade-in will be reappraised at that time and Buyer agrees that such reappraised value shall determine the allowance, if any, made for the trade-in. Buyer agrees to deliver the original bill of sale and the title to any trade-in along with the delivery of the trade-in and further agrees to execute any and all documents necessary or required to transfer legal title and ownership to Seller or its assigns. Buyer warrants the trade-in to be his property and free and clear of all liens and encumbrances except as otherwise noted herein. Buyer further warrants that the trade-in has not been declared rebuilt salvage, reconditioned, non-repairable, or flood damaged and that the emission systems have not been tampered with and are in the condition as originally manufactured, except for ordinary wear, unless so disclosed. Seller makes no representations, concerning fuel economy of the sale unit and any information posted on the sale unit or contained in literature relating to the same reflect the results of tests performed, required or prescribed by government agency, upon which Seller has relied. It is expressly agreed to and understood by Buyer and Seller that in the event of a non-credit transaction, Seller retains a security interest in the Purchased vehicle until such time as Buyer has paid the Seller for the vehicle. Buyer agrees to all the above listed charges.

BUYER'S SIGNATURE: SELLER'S SIGNATURE DATE

AUSTIN TRUCK & EQUIPMENT, LTD. DBA FREIGHTLINER OF AUSTIN

Attachment: BuyBoard Proposal (1103 : Res. No. 058 Sprinter Van with Camera System (#1103))

Dealer Information	Vehicle Information
AUSTIN TRUCK & EQUIPMENT, LTD.	2014 F2CA170
1701 SMITH ROAD	Region : Southern
AUSTIN,TX 78721	VPC :

Code	Description	Price
	Model: F2CA170	$ 41,540
	Paint 1: Arctic White	
	Uph.: Tunja Black Upholstery	
	***** STANDARD ACCESSORIES *****	
BB9	Electronic Stability Program (ESP9i)	
CL1	Adjustable Steering Wheel	
C38	Rear spring for 8,550 lbs GVWR model	
C40	Stabilizer Front Axle	
C47	Shock Absorbers Reinforce	
D03	Roof - High	
ED8	Parametric Special Module (PSM) Preparation	
EE8	Battery 100 AMP/12V	
EK1	Body Builder Connector Under Driver Seat	
EL8	Radio Speakers, 5 Front	
ES0	Battery Positive Contact	
E07	Hill Start Assist	
E30	Starter Battery Disconnect	
FF5	Shelf Above Windshield	
FI1	Remote Key Fob - 315 MHZ	
F61	Rear View Mirror	
HH2	Heater- Aux. Electric HotAir	
HH9	Air Conditioning - Front	
IG3	Sprinter Sales Designation	
J11	Tachometer in Miles	
J58	Warning System-Driver Seatbelt	
J65	Outside Temperature Gauge	
KB0	Fuel Tank- 26.4 Gallon/100 Liters	
KL1	Aux.Fuel Sending Unit	
KL5	Fuel Filter w/Water Separator	
K60	Exhaust Straight to Rear	
LB5	3rd LED Break Lamp Hi-Mounted	
LG6	Daytime driving lights	
LX7	North and South America	

L94	No Parking Lamps	
P47	Front Mud Flaps	
P48	Rear Mudflaps	
Q67	Tow Hook Rear	
RH0	Tire Brand - KUMHO	
RH8	Tires LT245/75 R16	
RM0	Tires All Season	
RM9	Specially Requested Tires	
RS3	Wheel Steel 6.5 X 16	
RY2	Tire Pressure Monitor Lamp	
R65	Spare Tire Carrier below Frame	
R87	Spare Wheel - Steel	
SA5	Air Bag- Driver	
SA6	Air Bag- Passenger	
S22	Armrest for Driver Seat	
S25	Armrest for Passenger Seat	
T09	Sliding Door Ext Track	
V85	Ashtrays - Front	
W54	Rear Doors 270 Degree Opening	
XC8	VIN# Visible from Outside	
XL8	GVWR 8,550 lbs	
XM0	Facelift	
XQ1	VIN Encoded vehicle data with check digit	
XY4	MODEL YEAR 2014	
XZ1	Model Generation 1	
X42	Literature English	
Y43	Hydraulic Jack	
ZB6	Vehicle dismantle/re-assembly	
ZU8	Country Code - USA	
ZX9	Badging - FREIGHTLINER BRAND	
Z44	Vehicle Registration NAFTA	
Z90	Deletion, Underfloor Preservation	
	***** OPTIONAL ACCESSORIES *****	
6CE	6-Cylinder Engine	$ 910
	G40 : Transmission - 5 Speed Auto	
	MG5 : Engine-3.0 Turbo Diesel BlueTEC	
	MH3 : Emissions EPA 13/CARB	
	M46 : Alternator 14 V/220 A	
C01	Driver Comfort Package	$ 540
	E46 : 12V Power Outlet- Driver Seat Base	

	FJ1 : I/P Hinged Lid-Center Stack Bin	
	FZ9 : Keys - Two Additional Masters	
	SB1 : Comfort Driver's Seat	
	SB2 : Comfort Passenger's Seat	
C06	Workspace Access Package	$ 770
	ES2 : 12V Power Outlet Rear Compartment	
	E28 : Auxiliary Battery 100 Amp	
	E36 : Cutoff Relay for Auxiliary Battery	
	L63 : Ceiling lights in load compartment	
	L71 : Light Motion Sensor Load Comp	
	T74 : Assist Handle - Sliding Door	
	T85 : Assist Handle-Left Rear Door	
	T86 : Assist Handle - Right Rear Door	
	W73 : Rear Door Step - Bumper, Gray	
X07	High Idle Variable Package	$ 625
	ED5 : Parametric Special Module	
	MT4 : Idle Control - Adjustable	
X17	Suspension Package 1	$ 125
	CF4 : Suspension w/H.D. Front & Rear Stabilizers	
	C42 : Stabilizer Bar, Rear Axle	
	C45 : Stabilizer Bar - Reinforced Front	
AR2	Axle Ratio 3.92	
D93	Deletion of Cargo Partition (Standard)	
EN7	Audio 15 (Standard)	
F68	Exterior Mirror - Power/Heated	$ 250
FR8	Rear View Camera	$ 640
H20	Heat-Insulating Glass (Standard)	
JW0	Rear Backup Alarm	$ 85
KP0	DEF Tank - Standard Size	
MS1	Cruise Control	$ 355
T16	Sliding Door- Right Side (Standard)	
V43	Cargo Van Wood Floor (Standard)	
	Subtotal	$ 45,840
	Destination & Delivery	$ 995
	Total	$ 46,835

Pricing is subject to change. Mercedes-Benz reserves the right to make changes without notification.

Recipient:

Casey Fyffe
Texarkana Water Utilities
Texarkana, Tx

Green Equipment Co.

Jimmy F Fougerousse, Salesman
Green Equipment Co.
2563 Gravel Drive
Fort Worth, TX 76118
817-247-5039, fax: 817-284-1107
jimmyfougerousse@greenequipco.com, ...

Quote: 0000020040

Date: May 1, 2014

Submitted by: Green Equipment Co.

Part No.	Unit	Qty.	Extended
E-RX-sys-truck-basic	US $67,000.00	1	US $67,000.00

Standard ROVVER X Truck System (with 300m reel)

includes RCX90 camera (high-resolution CCD color zoom camera with 10x optical and 12x digital zoom, auto shutter, auto/manual focus, built-in LED lighting, +/-135 degree tilt, endless rotation, pressure sensor, and twin laser diodes for measuring feature width); ROVVER X 130 crawler (steerable with twin high-performance motors and 6-wheel drive, anodized aluminum/ stainless steel chassis with pressure indicator, inclination and tilt sensors, location transmitter, rear viewing video camera); capability to transfer data to included desktop VisionReport software to generate reports and save data; wheels (6 small rubber, 4 medium rubber, 4 large rubber wheels, 4 medium grease wheels, 4 wheel spacers); VC200 control pendant to operate crawler, reel and camera (daylight viewable touch screen, MPEG-4 video encoding, storage to flash drive or USB Stick, online diagnostics and firmware updates, desk mount); RAX300 automatic motorized cable reel (with meter counter, splash-proof rating, 1000' orange transmission cable); power supply for 115/230V; wireless remote control; 25' extension cable (connecting VC200 to RAX300) with emergency power switch.

E-564-0900-00	US $12,000.00	1	US $12,000.00

Remote Lift Accessory

to raise/lower the RCX90 camera on the RX130 crawler

This document contains confidential information intended for a specific individual and purpose, and is protected by law.
If you are not the intended recipient, you should forward this to the individual above.
Any disclosure, copying or distribution of this document without the consent of vendor and sender is strictly prohibited by law.

(Continued ...)

Recipient:

Casey Fyffe
Texarkana Water Utilities
Texarkana, Tx

Green Equipment Co.

Jimmy F Fougerousse, Salesman
Green Equipment Co.
2563 Gravel Drive
Fort Worth, TX 76118
817-247-5039, fax: 817-284-1107
jimmyfougerousse@greenequipco.com, ...

Quote: 0000020040

Date: May 1, 2014

Submitted by: Green Equipment Co.

Part No.	Unit	Qty.	Extended
E-VID-0021-01	US $990.00	1	US $990.00

17" computer monitor

Samsung or equivalent LCD Monitor (SLVR)

SPCL	US $37,290.00	1	US $37,290.00

Truck Build out in Sprinter Van with under hood Generator. Note: Truck build also includes 2 video monitors.
See Attached Specifications

SPCL	US $2,800.00	1	US $2,800.00

Transport & Delivery

SPCL	US $44,515.00	1	US $44,515.00

Sprinter Van * See Attached Specifications*

SPCL	US $400.00	1	US $400.00

Buy Board fee

This document contains confidential information intended for a specific individual and purpose, and is protected by law.
If you are not the intended recipient, you should forward this to the individual above.
Any disclosure, copying or distribution of this document without the consent of vendor and sender is strictly prohibited by law.

(Continued ...)

Recipient:

Casey Fyffe
Texarkana Water Utilities
Texarkana, Tx

Green Equipment Co.

Jimmy F Fougerousse, Salesman
Green Equipment Co.
2563 Gravel Drive
Fort Worth, TX 76118
817-247-5039, fax: 817-284-1107
jimmyfougerousse@greenequipco.com, ...

Quote: 0000020040

Date: May 1, 2014

Submitted by: Green Equipment Co.

Part No.	Unit	Qty.	Extended

Total: US $164,995.00

Notes: This proposal may be withdrawn if not accepted within the period shown below. All equipment remains the property of the seller until sum stated above is paid in full. We propose to furnish labor and material, complete in accordance with above specifications, and subject to the conditions found on this agreement, for the sum stated above in accordance with the terms as specified.

Expiration Period: *30 days*

Terms: *Cash*

FOB: *Randolph, NJ*

Currency: *US $*

Respectfully Submitted,

Green Equipment Co.

The above, prices, specifications, and conditions are satisfactory and are hereby accepted. You are authorized for the work specified. Payment will be made as specified.

Accepted by _____ Date _____

This document contains confidential information intended for a specific individual and purpose, and is protected by law. If you are not the intended recipient, you should forward this to the individual above. Any disclosure, copying or distribution of this document without the consent of vendor and sender is strictly prohibited by law.

City of Texarkana, Texas

Version: E

Briefing Sheet

Update Date: 5/8/2014 1:19 PM

Lead Department: City Manager **Action Officer:** John Whitson, City Manager

Subject: Resolution No. 2014-059 recognizing Leadership Texarkana and their effort to document the Community's Vision and Values supporting Texarkana USA.

Briefing: 5/27/2014	**Public Hearing:** 5/27/2014	**Second Briefing:** June 9, 2014	**Council Vote:** 6/23/2014

Item Schedule

Updates/History of Briefing:

NOT APPLICABLE

Executive Summary and Background Information:

Leadership Texarkana has presented to the City Council a documented Community Vision and Values listing of 33 targeted community desired results. Staff has compared the targeted community desired results to the city's Goals and Perspectives and found that there are a minimum of 309 matches of common effort. This high degree of common desired outcomes verify that the City Council is working along common lines of effort with *Leadership Texarkana* to greatly improve not only Texarkana, Texas but also supporting Texarkana USA. As stated in the proposed resolution *Leadership Texarkana* has worked a long time building community leadership and setting a high standard of achievement.

Potential Options:

- None
-

Fiscal Implications:

None

Staff Recommendation:

Adopt the Proposed Resolution

Advisory Board/Committee Review:

NONE

Board/Committee Recommendation:

NOT APPLICABLE

Advisory Board/Committee Meeting Date and Minutes:

NOT APPLICABLE

Attachments

a. Goals and Perspectives (DOCX)

b. 2014-059 RES Community Vision by LIFT (DOC)
c. 2014-059 ATTH 01 Leadership Texarkana - A Focus For Our Future (PDF)
d. 2014-059 ATTH 02 LT Community Values Crosswalk to City Goals and Perspectives (PDF)

Staff Coordination

City Manager	John Whitson	Department Head Review	Completed	05/01/2014 8:07 AM
Parks & Recreation	Robby Robertson	Review	Completed	05/01/2014 8:10 AM
Police	Dan Shiner	Review	Completed	05/01/2014 8:15 AM
Water Utilities	Jim Cornelius	Review	Completed	05/01/2014 8:32 AM
Finance	Charlie Bassett	Review	Completed	05/01/2014 8:39 AM
Fire Department	Eric Schlotter	Review	Completed	05/01/2014 9:05 AM
Municipal Prosecutor	Deborah Jones	Review	Completed	05/01/2014 9:26 AM
Inspections Department		Lynn Henry	Review	Completed 05/01/2014 9:48 AM
Economic Development		Jerry Sparks	Review	Completed 05/01/2014 9:58 AM
City Engineer	Kyle Dooley	Review	Completed	05/01/2014 10:05 AM
Human Resources	Jim Powell	Review	Completed	05/01/2014 10:22 AM
Information Technology		Bobby Bean	Review	Completed 05/01/2014 10:45 AM
Community Redevelopment and Grants		Craig Lindholm	Review	Completed 05/01/2014 12:30 PM
City Secretary	Jennifer Evans	Review	Completed	05/01/2014 1:57 PM
Public Information Officer		Lisa Thompson	PIO Review	Completed 05/05/2014 10:22 AM
Public Works	Shirley Jaster	Review	Completed	05/05/2014 10:28 AM
City Manager	John Whitson	City Manager Review	Completed	05/05/2014 10:49 AM
City Council	Jennifer Evans	Meeting	Completed	05/28/2014 1:27 PM

Meeting History

05/12/14 City Council MOVED FORWARD Next: 05/27/14
City Manager Whitson briefed this item.

City of Texarkana, Texas

Developing Perspectives and Goals Pending Approval by the City Council:

Perspectives	Goals
Serve the Community	☐ Promote an Environmentally Sensitive & Livable Community ☐ Provide a Safe Community ☐ Deliver Quality Services ☐ Foster a Healthy Community
Run the Operations	☐ Enhance Community Preparedness & Responsiveness ☑ Maximize Partnership Opportunities ☐ Provide Courteous & Responsive Customer Service ☑ Model a Positive City Image ☐ Deliver Efficient Services ☐ Cultivate Community Involvement & Access
Manage the Resources	☐ Maintain Fiscal Strength ☐ Maximize Utilization & Resources ☐ Invest in Infrastructure & Transportation
Develop Personnel	☐ Develop a Skilled & Diverse Workforce ☐ Create a Positive & Rewarding Work Culture

Perspectives and Goals Additional Comments:

NONE

Resource Impact:

Staff time required if item is approved:	No Additional

Other Potential Impacts:

NONE APPLICABLE

Public Information Plan:

☐	Newspaper Notice (Required by Statute)	☐	Public Hearing (Required by Statute)
☐	Public Forum/Input Session	☑	Press Release
☑	E-News Distribution	☑	Website Notice
☑	Social Media (Twitter, Facebook, etc.)	☐	Special Mailing
☐	Flyers Posted	☐	Banners Posted
☐	Survey	☐	Automated Phone Call
☐	None Required	☐	

Other:

Attachment: Goals and Perspectives (1104 : RES 2014-059 Community Vision by LIFT)

RESOLUTION NO. 2014 - 059

A RESOLUTION OF THE CITY COUNCIL OF THE CITY OF TEXARKANA, TEXAS, RECOGNIZING *LEADERSHIP TEXARKANA* AND THEIR EFFORT TO DOCUMENT THE COMMUNITY'S VISION AND VALUES SUPPORTING TEXARKANA USA; AND ESTABLISHING AN EFFECTIVE DATE.

WHEREAS, *Leadership Texarkana* is committed to cultivating, connecting and engaging leaders in working together for community excellence, pride and progress; and

WHEREAS, *Leadership Texarkana* traces its history to 1978 when the Texarkana Chamber of Commerce visited the Dallas Chamber of Commerce community program; and

WHEREAS, kicking off the first *Leadership Texarkana* class of 25 in 1979; and

WHEREAS, in 2001 *Leadership Texarkana* separated from the Chamber of Commerce to form itself as an independent not-for-profit organization; and

WHEREAS, *Leadership Texarkana,* through its Leadership Initiative for Texarkana (LIFT) and other community-wide efforts to provide a wisdom-based platform to document the vision and values of the community, has presented its list of community desired results to the City Council; and

WHEREAS, the City of Texarkana follows 15 Goals distributed across four Perspectives to guide policy and decision making by the City Council and the City Staff; and

WHEREAS, upon review of both the *Leadership Texarkana's* 33 targeted community results and the City's Goals there are a minimum of 309 matches of common effort of the two organizations;

NOW, THEREFORE, BE IT RESOLVED BY THE CITY COUNCIL OF THE CITY OF TEXARKANA, TEXAS:

SECTION 1:

A. The City Council, on behalf of the city's more than 36,000 citizens, extends its gratitude and appreciation to *Leadership Texarkana* for your community-wide efforts directed at community improvement through leadership development and continuously raising the bar for achievement; and

B. The City Council enthusiastically embraces the desired community results as presented by *Leadership Texarkana* and hereby incorporates the desired outcomes into its strategic planning and commits and directs the city staff to continually document the city's production and contributions to the achievement of the desired community results.

Attachment: 2014-059 RES Community Vision by LIFT (1104 : RES 2014-059 Community Vision by LIFT)

SECTION 2: That this Resolution shall be in full force and effect from and after its passage and approval.

PASSED AND APPROVED in Regular Council Session on this the ___day of ___, 2014.

ATTEST:

_____ _____

JENNIFER EVANS, CITY SECRETARY BOB BRUGGEMAN, MAYOR

Attachment: 2014-059 RES Community Vision by LIFT (1104 : RES 2014-059 Community Vision by LIFT)

LifT
supportlift.org

Leadership Texarkana's goal is to provide a unifying voice of vision and common focus, based on citizen input from decades past through the present, as a means of engaging all leaders and citizens throughout the Texarkana wea in owning their part in creating our best future.

The community vision here-and the community values and dreams-have been drawn from the voluminous community input from many past decades of visioning and goal-setting exercises by the community, desires which are validated annually by diverse groups of area citizens from throughout the area, including those defining their Ideal Texarkana as part of the Leadership Texarkana program each year.

Adopted by the Leadership Texarkana Board of Directors on March 18, 2014, as part of LIfI The Leadership Initiative for Texarkana.

A FOCUS FOR OUR FUTURE:

The Community's Long-Expressed* VISION FOR TEXARKANA USA:

To have a regional community that is:

ONE OF A KIND
and
SECOND TO NONE

... a thriving center for education, business and culture which attracts and serves us all.

Enduring Community Values

Over the decades, the pictures of the IDEAL TEXARKANA painted by the community's citizens have consistently reflected enduring community VALUES of Excellence, Pride, Progress and Working Together.

In particular they have focused on:

- **A Culture of Excellence and Working Smart**
- **Educational Excellence**
- **Cultural Riches**
- **Pride of Place**
- **Economic, Social and Personal Well-being**

Although the details have varied slightly over the decades, the dreams for OUR COMMUNITY'S BEST FUTURE have focused consistently on these same enduring community values.

These values reflect the KEY AREAS where citizens want to see RESULTS.

Attachment: 2014-059 ATTH 01 Leadership Texarkana - A Focus For Our Future (1104 : RES 2014-059 Community Vision by LIFT)

As consistently expressed for years,

Texarkanians value and want to see PROGRESS and RESULTS around...

A CULTURE OF EXCELLENCE AND WORKING SMART ***...with results including***

- Making the most of our resources by working together where there is benefit to all.
- Working in alliance with natural partners-communicating, coordinating and cooperating-to most successfully face common obstacles or opportunities.
- Recognizing and capitalizing on our assets and strengths
- Accepting change as priority for progress

  Seeking out best practices; fostering local innovations
- Working smart, not only for ourselves today, but also with a long view for our children and those who come after, even if it requires current sacrifice for long-term benefit.

  Being intentional in working towards a future in which we offer value equal to and beyond other communities our size-from connectivity, to communications, creativity, sustainable infrastructure and resources, quality of life.

  Investing time and money in keeping and growing all economic and cultural assets we currently enjoy.

  Developing and implementing coordinated plans to achieve economic and other outcomes we want.
- Engaging all citizens from all walks of life in taking some measure of responsibility for our community's well-being-whether through public or non-profit service, or private investment.
- Tapping the potential of citizens to be content creators for the community; adopting policies which support it.
- Mobilizing and engaging citizens at the neighborhood level for taking responsibility.
- Working together, with focus and intention, from common vision for PROGRESS to meet the future.

EDUCATIONAL RICHES ***...with results including:***

- Excellence in area schools and higher education which mirrors the needs of our community; business and industry are attracted to Texarkana because we equip graduates for the workforce.

  Educational opportunities which equip students for a future workforce we can only imagine, with capacities flexible enough to be valued in any position.

  Educational opportunities which intentially develop our own creative and innovative talent so that we are competitive with communities which are more effective talent magnets.

  Educational opportunities which intentionally yield the citizens (civil, innovative, engaged) who will ensure our community's success today and for the future.
- Educational opportunities starting young which foster in our youth the knowledge, skills and attitudes which we identify as being critical to our community's future; We start young in supporting our regional "ecosystem."

  Citizens of the region who value and pursue education from preschool through completion of secondary and post-secondary education.

Focus for our Future Continued....

Attachment: 2014-059 ATTH 01 Leadership Texarkana - A Focus For Our Future (1104 : RES 2014-059 Community Vision by LIFT)

CULTURAL RICHES ***...with results including***

Community support for maximizing the potential of our cultural resources for connecting and growing our community and the people who live here,

Community support for opportunities to grow our creative community as we grow ever more culturally rich.

A vibrant downtown reflecting our history, and with modern conveniences and attractions

A community-supported fund to sustain our historic buildings/ to restore and preserve Historical landmarks

Events and performances year-round which serve and appeal to diverse audiences of all ages.

PRIDE OF PLACE from beauty ***...with results including:***

- Corridors of Texarkana which are places of both natural and planned beauty and cleanliness, that tells those who pass through Texarkana that we take pride in our community, and that we are smart enough to know it matters.
- A commitment to beauty, urban integrity (vs. decay) and cleanliness throughout the community that instills pride, minimizes crime, and enhances safety, personal and economic well-being.

Public policies, code enforcement and priorities which foster beauty and pride.

Community support for green spaces and assets that foster citizen affection for place.

PRIDE OF PLACE from knowing ***...with results including:***

Citizens of our regional community are proud of what we are and what we offer because they know about it.

- Citizens support the riches of opportunities and activities offered throughout the region today, they enthusiastically take advantage of them, and they champion them to others, because they know about them.
- They know what Texarkana offers that is authentically one of a kind and second to none, and they champion those assets wherever they go; citizens know who we are and communicate it with pride through both their words and their actions
- The citizens know and celebrate our unique heritage, as manifested in our downtown and beyond.
- The citizens recognize and value our commitment to service, generosity and care for one another.

Outsiders know who we are and what we offer based on well-communicated, consistent and authentically positive key messages which our cities, citizens and businesses deliver.

ECONOMIC, SOCIAL AND PERSONAL WELL-BEING: ***...with results including:***

All these outcomes, which communicate to all that we work smart, that we plan for the future, and that we care about our community. As a thriving center for education, business and culture, we attract and serve all ages and industries.

We succeed BECAUSE we are a community full of citizens
WORKING TOGETHER, with common focus and vision,
for our community's best future.

WE NEED FOCUS FOR OUR FUTURE-for being SECOND TO NONE...
LET'S OWN IT.

Attachment: 2014-059 ATTH 01 Leadership Texarkana - A Focus For Our Future (1104 : RES 2014-059 Community Vision by LIFT)

LiFT

The Leadership Initiative for Texarkana

A PROGRAM OF LEADERSHIP TEXARKANA

FOCUS FOR OUR FUTURE: MOVING FROM TALK TO ACTION

We who live in the greater Texarkana area share a common interest in the well-being of our community, both for ourselves now, and as a legacy for those who come after us-our children. The Texarkana area community has always cared about excellence and achieves it when individuals and groups are working together with common purpose for some common good.

Crisis brings out our best, but our more usual habit is to work in relative isolation, without coordinating our efforts and resources. As a result, our community too often is not working at full potential.

On many fronts, we spin our wheels. As one retiree said: "We are beating the same dead horse we've been beating for over forty years."

How much more effective would we be in maximizing our resources and our potential IF...

As a whole community we shared a common picture of our desired future?

And we were committed to WORKING SMART to move the community forward.

Our desire Is to create a leadership culture that is about the whole of Texarkana USA. One that brings common focus to leaders from all sectors of our community,

- PUBLIC (city government, county government, schools),
- PRIVATE (Chamber of Commerce leaders, businessowners, individuals)
- INDEPENDENT (social sector and non-profit leaders)
- MEDIA (both traditional and social)

EACH sector and citizen has its unique ROLES and RESPONSIBILITIES to play. And for success, leaders in each sector must decide to OWN their own piece of the possibilities, because it will require the efforts of everyone.

If we are to succeed, we must work from common purpose, so that we might intentionally and creatively develop the unique resources of Texarkana USA to attract and serve us all.

What IF we all endorsed a common vision and values and committed to "working smart?" Could we get the results we want?

What if we shared a common FOCUS on our FUTURE-and OWNED our parts to play?

Attachment: 2014-059 ATTH 01 Leadership Texarkana - A Focus For Our Future (1104 : RES 2014-059 Community Vision by LIFT)

A Focus for our Future for being second to none		SERVE THE COMMUNITY				RUN THE OPERATIONS						MANAGE THE RESOURCES			DEVELOP PERSONNEL	
As consistently expressed for years, Texarkanians value and want to see progress and results around...		Promote an Environmentally Sensitive & Livable Community	Provide a Safe Community	Deliver Quality Services	Foster a Healthy Community	Enhance Community Preparedness & Responsiveness	Maximize Partnership Opportinities	Provide Courteous & Responsive Customer Service	Model a Positive City Image	Deliver Efficient Services	Cultivate Community Involvement & Access	Maintain Fiscal Strength	Maximize Utilization & Resources	Invest in Infrastructure & Transportation	Develop a Skilled & Diverse Workforce	Create a Positive & Rewarding Work Culture
A CULTURE OF EXCELLENCE AND WORKING SMART ...with results including:																
A1	Making the most of our resources by working together where there is benefit to all.	X	X	X	X	X	X		X		X		X			
A2	Working in alliance with natural partners-communicating, coordinating and cooperating-to most successfully face common obstacles or opportunities.		X	X	X	X	X		X		X					
A3	Recognizing and capitalizing on our assets and strengths	X	X	X	X	X	X	X	X	X	X	X	X	X	X	X
A4	Accepting change as priority for progress	X	X	X	X	X	X	X	X	X	X	X	X	X	X	X
A5	Seeking out best practices; fostering local innovations	X	X	X	X	X	X	X	X	X	X	X	X	X	X	X
A6	Working smart, not only for ourselves today, but also with a long view for our children and those who come after, even if it requires current sacrifice for long-term benefit.		X	X	X	X	X	X	X	X	X	X	X			
A7	Being intentional in working towards a future in which we offer value equal to and beyond other communities our size-from connectivity, to communications, creativity, sustainable infrastructure and resources, quality of life.	X	X	X	X	X	X	X	X	X	X	X	X	X	X	X
A8	Investing time and money in keeping and growing all economic and cultural assets we currently enjoy. Developing and implementing coordinated plans to achieve economic and other outcomes we want.		X		X	X	X	X	X	X	X	X	X	X		
A9	Engaging all citizens from all walks of life in taking some measure of responsibility for our community's well-being-whether through public or non-profit service, or private investment.		X		X	X	X		X		X					
A10	Tapping the potential of citizens to be content creators for the community; adopting policies which support it.		X		X	X	X		X		X					

Attachment: 2014-059 ATTH 02 LT Community Values Crosswalk to City Goals and Perspectives (1104 :

A Focus for our Future for being second to none		SERVE THE COMMUNITY				RUN THE OPERATIONS						MANAGE THE RESOURCES			DEVELOP PERSONNEL	
As consistently expressed for years, Texarkanians value and want to see progress and results around...		Promote an Environmentally Sensitive & Livable Community	Provide a Safe Community	Deliver Quality Services	Foster a Healthy Community	Enhance Community Preparedness & Responsiveness	Maximize Partnership Opportinities	Provide Courteous & Responsive Customer Service	Model a Positive City Image	Deliver Efficient Services	Cultivate Community Involvement & Access	Maintain Fiscal Strength	Maximize Utilization & Resources	Invest in Infrastructure & Transportation	Develop a Skilled & Diverse Workforce	Create a Positive & Rewarding Work Culture
A11	Mobilizing and engaging citizens at the neighborhood level for taking responsibility.		X		X	X	X		X		X					
A12	Working together, with focus and intention, from common vision for PROGRESS to meet the future.		X	X	X	X	X	X	X	X	X	X	X	X	X	X
EDUCATIONAL RICHES ...with results including:																
B1	Excellence in area schools and higher education which mirrors the needs of our community; business and industry are attracted to Texarkana because we equip graduates for the workforce.															
B2	Educational opportunities which equip students for a future workforce we can only imagine, with capacities flexible enough to be valued in any position.															
B3	Educational opportunities which intentially develop our own creative and innovative talent so that we are competitive with communities which are more effective talent magnets.															
B4	Educational opportunities which intentionally yield the citizens (civil, innovative, engaged) who will ensure our community's success today and for the future.															
B5	Educational opportunities starting young which foster in our youth the knowledge, skills and attitudes which we identify as being critical to our community's future; We start young in supporting our regional "ecosystem."										X					
B6	Citizens of the region who value and pursue education from preschool through completion of secondary and post-secondary education.				X	X	X		X		X					
CULTURAL RICHES...with results including:																
C1	Community support for maximizing the potential of our cultural resources for connecting and growing our community and the people who live here,		X		X	X	X		X		X				X	X
C2	Community support for opportunities to grow our creative community as we grow ever more culturally rich.		X		X	X	X		X		X				X	X

Attachment: 2014-059 ATTH 02 LT Community Values Crosswalk to City Goals and Perspectives (1104 :

A Focus for our Future for being second to none		SERVE THE COMMUNITY				RUN THE OPERATIONS						MANAGE THE RESOURCES			DEVELOP PERSONNEL	
As consistently expressed for years, Texarkanians value and want to see progress and results around...		Promote an Environmentally Sensitive & Livable Community	Provide a Safe Community	Deliver Quality Services	Foster a Healthy Community	Enhance Community Preparedness & Responsiveness	Maximize Partnership Opportunities	Provide Courteous & Responsive Customer Service	Model a Positive City Image	Deliver Efficient Services	Cultivate Community Involvement & Access	Maintain Fiscal Strength	Maximize Utilization & Resources	Invest in Infrastructure & Transportation	Develop a Skilled & Diverse Workforce	Create a Positive & Rewarding Work Culture
C3	A vibrant downtown reflecting our history, and with modern conveniences and attractions A community-supported fund to sustain our historic buildings/ to restore and preserve historical landmarks.		X		X	X	X		X		X	X	X	X		
C4	Events and performances year-round which serve and appeal to diverse audiences of all ages.		X	X	X		X		X		X	X	X		X	X
PRIDE OF PLACE from beauty ...with results including:																
D1	Corridors of Texarkana which are places of both natural and planned beauty and cleanliness, that tells those who pass through Texarkana that we take pride in our community, and that we are smart enough to know it matters.	X	X		X		X		X		X					
D2	A commitment to beauty, urban integrity (vs. decay) and cleanliness throughout the community that instills pride, minimizes crime, and enhances safety, personal and economic well-being.	X	X		X		X		X		X					
D3	Public policies, code enforcement and priorities which foster beauty and pride. Community support for green spaces and assets that foster citizen affection for place.	X	X	X	X	X	X	X	X	X	X	X	X	X	X	X
D4	Community support for green spaces and assets that foster citizen affection for place.	X	X		X		X		X		X					
PRIDE OF PLACE from knowing ...with results including:																
E1	Citizens of our regional community are proud of what we are and what we offer because they know about it.	X	X	X	X	X	X	X	X	X	X	X	X	X	X	X
E2	Citizens support the riches of opportunities and activities offered throughout the region today, they enthusiastically take advantage of them, and they champion them to others, because they know about them.	X	X	X	X	X	X	X	X	X	X	X	X	X	X	X
E3	They know what Texarkana offers that is authentically one of a kind and second to none, and they champion those assets wherever they go; citizens know who we are and communicate it with pride through both their words and their actions	X	X	X	X	X	X	X	X	X	X	X	X	X	X	X
E4	The citizens know and celebrate our unique heritage, as manifested in our downtown and beyond.	X	X	X	X	X	X	X	X	X	X	X	X	X	X	X

A Focus for our Future for being second to none		SERVE THE COMMUNITY				RUN THE OPERATIONS						MANAGE THE RESOURCES			DEVELOP PERSONNEL	
As consistently expressed for years, Texarkanians value and want to see progress and results around...		Promote an Environmentally Sensitive & Livable Community	Provide a Safe Community	Deliver Quality Services	Foster a Healthy Community	Enhance Community Preparedness & Responsiveness	Maximize Partnership Opportunities	Provide Courteous & Responsive Customer Service	Model a Positive City Image	Deliver Efficient Services	Cultivate Community Involvement & Access	Maintain Fiscal Strength	Maximize Utilization & Resources	Invest in Infrastructure & Transportation	Develop a Skilled & Diverse Workforce	Create a Positive & Rewarding Work Culture
E5	The citizens recognize and value our commitment to service, generosity and care for one another.	X	X	X	X	X	X	X	X	X	X	X	X	X	X	X
E6	Outsiders know who we are and what we offer based on well-communicated, consistent and authentically positive key messages which our cities, citizens and businesses deliver.	X	X	X	X	X	X	X	X	X	X	X	X	X	X	X
ECONOMIC, SOCIAL AND PERSONAL WELL-BEING: ...with results including:																
F1	All these outcomes, which communicate to all that we work smart, that we plan for the future, and that we care about our community. As a thriving center for education, business and culture, we attract and serve all ages and industries.	X	X	X	X	X	X	X	X	X	X	X	X	X	X	X

Attachment: 2014-059 ATTH 02 LT Community Values Crosswalk to City Goals and Perspectives (1104 :

City of Texarkana, Texas

Version: I

Briefing Sheet

Update Date: 5/14/2014 2:09 PM

Lead Department: Water Utilities **Action Officer:** Joe Phillips,

Subject: Resolution No. 2014-063 authorizing the City Manager to execute a contract for the exterior and interior repainting of the I-30 and Liberty Eylau elevated storage tanks and the interior of the Wright Patman Water Treatment Plant backwash tank with Utility Service Co., Inc. of Perry, Georgia in an amount not to exceed $1,018,850.

Briefing:	5/27/2014	**Public Hearing:**	5/27/2014	**Second Briefing:**	June 9, 2014	**Council Vote:**	6/23/2014

Item Schedule
Schedule 1: Brief twice - vote once (six weeks)

Updates/History of Briefing:

NOT APPLICABLE

Executive Summary and Background Information:

Bids were received Thursday, April 10, 2014 for the 2014 Texarkana Water Utilities Tank Painting Project. In an effort to obtain the best pricing, four tanks were included in the project: the College Hill elevated tank (to be funded by the Arkansas Capital Improvement Fund); the Liberty Eylau elevated tank; the I-30 elevated tank; and the Wright Patman Water Treatment Plant backwash tank. Eleven (11) bid packages for the project were sent out and four (4) contractors bid on the project. Utility Service Co., Inc. of Perry, Georgia was the apparent low bidder for the project with a total bid of $1,211,950.00 and a bid of $1,018,850.00 for the exterior and interior sandblasting and repainting of the I-30 and Liberty Eylau elevated tanks and the interior sandblasting and repainting of the Wright Patman Water Treatment Plant backwash tank. The bid also includes the repair of the Liberty Eylau tank interior pipe riser. The exterior of the I-30 tank was power-washed and over-coated and the interior was sandblasted and repainted in 1995 and all of the coated areas now need to be completely removed and replaced. The Liberty Eylau tank has not been repainted since it was constructed in 1988 and all of the existing coating needs to be removed and replaced. There is no record of the last time the interior of the Wright Patman backwash tank was repainted. The Texas Commission on Environmental Quality (TCEQ) has instructed the Utility to repaint the interiors and exteriors of the I-30 and Liberty Eylau tanks. Utility Service Co., Inc. is a national paint and tank service company with an excellent reputation. Utility Service Co., Inc. has completed the repainting and rehabilitation of a three (3) million gallon ground storage tank in Bentonville, Arkansas and a two (2) million gallon elevated storage tank in Rogers, Arkansas. They are currently repainting and repairing a one (1) million gallon elevated storage tank in Irving, Texas. Utility Service Co., Inc. also has a regional office in Cypress, Texas and service centers in Proctor Arkansas and Cypress, Texas.

Potential Options:

- None
-

Fiscal Implications:

Funds were designated in the Utility's Texas Capital Improvement Fund and the Lake Texarkana Water Supply Corporation (LTWSC) Capital Improvement Fund for this project. All of the tanks bid within the budgeted amount except the I-30 tank. Current Texas air quality requirements require the complete shrouding of water tanks during the sandblasting of exterior surfaces and this has caused an increase in the cost to repaint water tanks. The complexity of the shrouding system for a two million gallon multi-legged elevated water tank and the additional time required due to potential wind delays added to the overall cost to repaint the exterior of the I-30 tank. $65,000 was budgeted in the LTWSC Fund for the backwash tank project and the bid price is $42,200. $700,000 was budgeted in the Texas Capital Improvement Fund for the repainting and repair of the I-30 and Liberty Eylau tanks and the bid was is $976,650. As the I-30 and the Liberty Eylau tanks are existing infrastructure, the Texarkana Water Utilities staff recommends reallocating funds from the Texas Infrastructure Fund to make up the $276,650 difference. The Utility currently has $500,000 budgeted in the Wagner Creek Trunk Collection Main - Phase I. Due to the high water table and ground conditions where the Wagner Creek sewer main is located it will require an extremely dry year for this project to proceed. The Utility staff proposes to postpone this project until 2015 and utilize the funds for other infrastructure projects.

Staff Recommendation:

Texarkana Water Utilities staff recommends approval of the bid and a bid tabulation sheet is attached.

Advisory Board/Committee Review:

NONE

Board/Committee Recommendation:

(Insert Date Here):

NOT APPLICABLE

Advisory Board/Committee Meeting Date and Minutes:

NOT APPLICABLE

Attachments

a. Goals and Perspectives (DOCX)
b. 2014-63 Tank Project (DOC)
c. 2014-063 Exhibit tank bid (DOC)
d. 2014tankbid01(DOCX)

Staff Coordination

Water Utilities	Bill King 05/01/2014 3:17 PM	Water Utilities Review	Completed

City of Texarkana, Texas

TWU Finance	Jim Cornelius	TWU Finance Review	Completed	05/01/2014 3:37 PM
Public Information Officer	05/01/2014 4:09 PM	Lisa Thompson	PIO Review	Completed
City Manager	John Whitson	City Manager Review	Completed	05/01/2014 4:54 PM
City Council	Jennifer Evans	Meeting	Completed	05/28/2014 1:27 PM

Meeting History

05/12/14 City Council MOVED FORWARD Next: 05/27/14

Bill King briefed this item.

City of Texarkana, Texas

Developing Perspectives and Goals Pending Approval by the City Council:

Perspectives	Goals
Serve the Community	☐ Promote an Environmentally Sensitive & Livable Community ☐ Provide a Safe Community ☑ Deliver Quality Services ☐ Foster a Healthy Community
Run the Operations	☐ Enhance Community Preparedness & Responsiveness ☐ Maximize Partnership Opportunities ☐ Provide Courteous & Responsive Customer Service ☑ Model a Positive City Image ☐ Deliver Efficient Services ☐ Cultivate Community Involvement & Access
Manage the Resources	☐ Maintain Fiscal Strength ☐ Maximize Utilization & Resources ☑ Invest in Infrastructure & Transportation
Develop Personnel	☐ Develop a Skilled & Diverse Workforce ☐ Create a Positive & Rewarding Work Culture

Perspectives and Goals Additional Comments:

None

Resource Impact:

Staff time required if item is approved:	Select One By Clicking Here

Other Potential Impacts:

None Applicable

Public Information Plan:

☑	Newspaper Notice (Required by Statute)	☐	Public Hearing (Required by Statute)
☐	Public Forum/Input Session	☐	Press Release
☐	E-News Distribution	☐	Website Notice
☐	Social Media (Twitter, Facebook, etc.)	☐	Special Mailing
☐	Flyers Posted	☐	Banners Posted
☐	Survey	☐	Automated Phone Call
☐	None Required	☐	

Other:

Attachment: Goals and Perspectives (1107 : Res. No. 2014-063 2014 Tank Painting Project)

RESOLUTION NO. 2014 - 063

A RESOLUTION OF THE CITY COUNCIL OF THE CITY OF TEXARKANA, TEXAS, AUTHORIZING THE CITY MANAGER TO ACCEPT THE BID AND ENTER INTO A CONTRACT WITH UTILITY SERVICE CO., INC. OF PERRY, GEORGIA, IN AN AMOUNT NOT TO EXCEED ONE MILLION EIGHTEEN THOUSAND EIGHT HUNDRED FIFTY AND NO/100 DOLLARS ($1,018,850.00) FOR THE EXTERIOR AND INTERIOR REPAINTING OF THE I-30 AND LIBERTY EYLAU ELEVATED STORAGE TANKS AND THE INTERIOR OF THE WRIGHT PATMAN WATER TREATMENT PLANT BACKWASH TANK; AND ESTABLISHING AN EFFECTIVE DATE.

WHEREAS, on April 10, 2014, four (4) bids were received by the Texarkana Water Utilities for the 2014 Texarkana Water Utilities Tank Painting Project; and

WHEREAS, the project will consist of repainting the College Hill elevated tank (to be funded by the Arkansas Capital Improvement Fund), the Liberty Eylau elevated tank, the I-30 elevated tank, and the Wright Patman Water Treatment Plant backwash tank; and

WHEREAS, the lowest and best bid by a responsible vendor for this project was submitted by UTILITY SERVICE CO., INC. of Perry, Georgia, a copy of which is attached hereto as Exhibit "A", in an amount not to exceed ONE MILLION EIGHTEEN THOUSAND EIGHT HUNDRED FIFTY AND NO/100 DOLLARS ($1,018,850.00); and

WHEREAS, the funds were budgeted in the Texarkana Water Utilities 2013-2014 Budget at SIXTY FIVE THOUSAND AND NO/100 DOLLARS **(**$65,000.00) in the Lake Texarkana Water Supply Corporation Capital Improvement Fund and SEVEN HUNDRED THOUSAND AND NO/100 DOLLARS ($700,000.00) in the Texas Capital Improvement Fund and as the I-30 Tank and the Liberty Eylau can be considered infrastructure and the remaining funds can be reallocated from the Wagner Creek Trunk Collection Main – Phase I project within the Texas Infrastructure Fund.

NOW, THEREFORE, BE IT RESOLVED BY THE CITY COUNCIL OF THE CITY OF TEXARKANA, TEXAS:

SECTION 1: That the lowest and best bid by a responsible vendor, submitted by UTILITY SERVICE CO., INC. of Perry, Georgia, a copy of which is attached hereto as Exhibit "A", be and is hereby approved in an amount not to exceed ONE MILLION EIGHTEEN THOUSAND EIGHT HUNDRED FIFTY AND NO/100 DOLLARS ($1,018,850.00) for the exterior and interior repainting of the I-30 and Liberty Eylau elevated Storage Tanks and the interior repainting of the Wright Patman Water Treatment Plant Backwash Tank for the 2014 Texarkana Water Utilities Tank Painting Project.

SECTION 2: That the City Manager be and is authorized to contract with UTILITY SERVICE CO., INC., of Perry, Georgia for the above-described services.

Attachment: 2014-63 Tank Project [Revision 2] (1107 : Res. No. 2014-063 2014 Tank Painting Project)

SECTION 3: That this Resolution shall be in full force and effect from and after its passage and approval.

PASSED AND APPROVED in Regular Council Session on this the 23rd day of June, 2014.

ATTEST:

_____ _____

JENNIFER EVANS, CITY SECRETARY BOB BRUGGEMAN, MAYOR

Attachment: 2014-63 Tank Project [Revision 2] (1107 : Res. No. 2014-063 2014 Tank Painting Project)

Bid Tabulation

Repair and Repainting of the Interstate Highway 30, Liberty Eylau and College Hill Elevated Water Storage Tanks and the Wright Patman Water Treatment Plant Backwash Tank

2:00 P.M. Tuesday, April 10, 2014

		Base Bid
1.	Maguire Iron, Inc. Sioux Falls, South Dakota	$1,716,910.00
2.	Protective Linings and Coatings, Inc. Alexander, Arkansas	$1,737,190.00
3.	Utility Service CO., Inc. Perry, Georgia	$1,211,950.00
4.	Caldwell Tanks/Coatings Division Harrodsburg, Kentucky	$1,371,450.00

Time First Bid Opened:	2:00 P.M.
Number of Bidders:	4
Apparent Low Bidder:	Utility Service Co., Inc.

Attachment: 2014-063 Exhibit tank bid [Revision 1] (1107 : Res. No. 2014-063 2014 Tank Painting Project)

2014 TEXARKANA TANK PAINTING PROJECT

Tank	Bid Price	Budget Amount	Budget Source
ARKANSAS			
College Hill Elevated Tank	$193,100	$250,000	Arkansas Capital Improvement Fund
TEXAS			
Liberty Eylau Elevated Tank	$243,850	$250,000	Texas Capital Improvement Fund
I-30 Elevated Tank	$732,800	$450,000	Texas Capital Improvement Fund
Wright Patman WTP Backwash Tank	$42,200	$65,000	Lake Texarkana WSC Capital Imp. Fund

Attachment: 2014tankbid01 (1107 : Res. No. 2014-063 2014 Tank Painting Project)

City of Texarkana, Texas

Version: F

Briefing Sheet

Update Date: 6/2/2014 11:02 AM

Lead Department:	Municipal Services and Public Works	**Action Officer:**	Shirley Jaster, Director of Community and Public Works
Subject:	Ordinance No. 2014-050 amending Chapter 13 Motor Vehicles and Traffic of the Code of Ordinances regulating the parking of vehicles in front yards of residential structures.		

Briefing:	6/23/2014	**Public Hearing:**	5/12/2014	**Second Briefing:**	June 9, 2014	**Council Vote:**	6/23/2014

Item Schedule

Schedule 1: Brief twice - vote once (six weeks)

Updates/History of Briefing:

"NOT APPLICABLE"

Executive Summary and Background Information:

City Council requested staff work on a proposed ordinance that would regulate and restrict parking of motor vehicles in the front yard of residential property.

In October of 2013 the following staff members Kenneth Steele, Lynn Henry, Craig Lindholm, officers Cody Harris and Karey Parker and Shirley Jaster met in a series of meetings. The group met to discuss and foster ideas based on other cities ordinances and Texarkana's lot sizes.

In January of 2014 the staff group put together notes that could be used for a proposed ordinance to regulate parking of vehicles in the front yards of residences. These notes provided exceptions for limited parties and other occasional gathering at residences. It also provides requirements related to the amount of yard area that can be used for parking based on an individual property or lot size. A paved surface would be required in order to park a motorized vehicle in the front yard. Enforcement and fines associated with these regulations were also decided upon. The City has a driveway permitting process that would be followed.

Staff also had various concerns with the regulation of vehicles parking in the front yard.

1. Various residentially lined streets in Texarkana have been widen to accommodate transportation needs. As streets were widened property from adjacent landowners front yards were reduced in size. Now many of these streets have residential structures very close to the new roadways and limited parking in remaining driveways exist. Many of these residential property owners are parking on unpaved surfaces in the front yard or have no available property to add paved surface areas for parking without using the whole front yard area. Street parking is not available for these residences on a major road. Examples of this would be Richmond Road from Summerhill Road to Robison Road. MLK Boulevard from Whitaker Street to US. Highway 67.

2. Many of the city residential lots are narrow in width. Some are only 50 feet wide. This limits the amount of front yard area to allow parking. Many of these lots do not have access available to the rear yard due to the size and layout of the existing structure.
3. The cost associated with constructing a paved surface for any motorized vehicle may be a hardship on the citizen or homeowner.
4. Street parking would increase.
5. No parking signs on narrow streets may be needed to allow for traffic movement.
6. Increased labor needs in city employees to regulate and enforce this regulation.

Staff had positive responses to regulations for vehicular parking too.

1. Curb appeal to parking in driveways or designated areas is neat and orderly.
2. Planning for parking needs can be addressed with new construction.
3. New subdivisions may increase the size of front yard setbacks to allow for future growth needs.
4. Each property would maintain some green space for a front yard.

Potential Options:

- Approval of the Ordinance to regulate parking in front yards
- No action

Fiscal Implications:

Increase costs to enforce and regulate the violations of the Ordinance

Staff Recommendation:

Advisory Board/Committee Review:

("NONE")

Board/Committee Recommendation:

(

"NOT APPLICABLE"

Advisory Board/Committee Meeting Date and Minutes:

"NOT APPLICABLE"

Attachments

a. Goals and Perspectives (DOCX)
b. Ordinance 2014-050 parking in yards(DOC)
c. San Antonio Parking in Yards (DOCX)
d. Parking in Yards Ordinance Little Rock AR (PDF)
e. Parking of vehicles on certain residential properties Houston TX (PDF)
f. PARKING MOTOR VEHICLES IN YARDS RESTRICTED Jefferson (PDF)
g. Email from Tom and Ann Coleman via Mayor Bruggeman 20130716 (PDF)
h. NOTES FOR THE PARKING ORDINANCE (DOCX)
i. Parking in Yards 50% diagram (PDF)

Staff Coordination

Public Works	Shirley Jaster	Department Head Review	Completed	04/17/2014 5:47 PM
Public Information Officer	Lisa Thompson	PIO Review	Completed	04/17/2014 7:07 PM
Community Redevelopment and Grants	Craig Lindholm	Review	Completed	04/18/2014 8:13 AM
Police	Dan Shiner	Review	Completed	04/18/2014 10:14 AM
City Manager	John Whitson	City Manager Review	Completed	04/20/2014 10:50 PM
City Council	Jennifer Evans	Meeting	Completed	05/14/2014 8:46 AM

Meeting History

04/28/14	City Council	MOVED FORWARD	Next: 05/12/14
05/12/14	City Council	MOVED FORWARD	Next: 05/27/14

Shirley Jaster summarized in brief that the proposed ordinance would basically limit the number of vehicles parked in residential yards. City Manager Whitson spoke to this item.
Tom Sadowski, Keep Texarkana Beautiful representative, spoke to council regarding junk car issues and how that reflects on the beautification of Texarkana.
Councilmember Miller said the ordinance language needed more clarification. Shirley Jaster responded that the proposed ordinance is in draft stage and would be changed to fit and read as the council wishes.

City of Texarkana, Texas

Developing Perspectives and Goals Pending Approval by the City Council:

Perspectives	Goals
Serve the Community	☑ Promote an Environmentally Sensitive & Livable Community ☑ Provide a Safe Community ☐ Deliver Quality Services ☐ Foster a Healthy Community
Run the Operations	☐ Enhance Community Preparedness & Responsiveness ☐ Maximize Partnership Opportunities ☐ Provide Courteous & Responsive Customer Service ☑ Model a Positive City Image ☐ Deliver Efficient Services ☐ Cultivate Community Involvement & Access
Manage the Resources	☐ Maintain Fiscal Strength ☐ Maximize Utilization & Resources ☐ Invest in Infrastructure & Transportation
Develop Personnel	☐ Develop a Skilled & Diverse Workforce ☐ Create a Positive & Rewarding Work Culture

Perspectives and Goals Additional Comments:

Provide for curb appeal to residential neighborhoods

Resource Impact:

Staff time required if item is approved:	Select One By Clicking Here

Other Potential Impacts:

"NONE APPLICABLE"

Public Information Plan:

☐	Newspaper Notice (Required by Statute)	☐	Public Hearing (Required by Statute)
☑	Public Forum/Input Session	☐	Press Release
☐	E-News Distribution	☐	Website Notice
☐	Social Media (Twitter, Facebook, etc.)	☐	Special Mailing
☐	Flyers Posted	☐	Banners Posted
☐	Survey	☐	Automated Phone Call
☐	None Required	☐	

Other:

Attachment: Goals and Perspectives (1093 : Ord No. 2014-050 Parking in yards)

Publish

ORDINANCE NO. 2014 – 050

AN ORDINANCE OF THE CITY COUNCIL OF THE CITY OF TEXARKANA, TEXAS AMENDING CHAPTER 13, MOTOR VEHICLES AND TRAFFIC, ARTICLE V, DIVISION I OF THE CODE OF ORDINANCE OF THE CITY OF TEXARKANA, TEXAS BY ADDING SEC. 13-110 *PARKING OF MOTOR VEHICLES IN FRONT YARDS OF RESIDENTIAL PROPERTY*; PROVIDING FOR A PENALTY CLAUSE; PROVIDING FOR PUBLICATION; PROVIDING FOR A REPEALER CLAUSE; PROVIDING A SEVERABILITY CLAUSE; AND ESTABLISHING AN EFFECTIVE DATE.

WHEREAS, parking of automobiles, trucks, boats, trailers, motor home vehicles, campers and other type of motorized vehicles in front yards of residential property is not currently regulated and these type vehicles are not always parked on a paved surface or driveway; and

WHEREAS, citizens have requested that the City regulate motorized vehicles that are not parked on a paved surface to encourage beautification efforts promoting curb appeal for the City neighborhoods; and

WHEREAS, the City Council has determined that it is in the best interest of the City to require all motorized vehicles located in the front yard of residential property to be parked on a paved surface.

NOW, THEREFORE, BE IT ORDAINED BY THE CITY COUNCIL OF THE CITY OF TEXARKANA, TEXAS:

SECTION 1: Chapter 13, Motor Vehicles and Traffic, Article V, Division I, of the City of Texarkana, Texas, Code of Ordinances is hereby amended Sec. by adding Sec. 13-110 as follows:

Sec. 13-110- Parking of motor vehicles in front yards of residential property.

a) Definitions:

Motor vehicle- a passenger vehicle, truck, boat, camper, recreational vehicle, motorcycle, golf cart, all-terrain vehicle, trailer, or other similar vehicle. Motor vehicle does not include a motorized wheelchair, bicycle, tricycle or quadricycle.

Paved surface- means treated or covered with concrete, asphalt, pavers or other similar material and maintained in such a manner as to provide a mud free and dustless surface. City Engineer shall determine if material meets criteria.

Front yard- any open space between the pavement of the street to the front exterior wall of the structure and a line extending from one side of the lot or parcel of land to the opposite side of the lot or parcel of land. This also includes corner street side yard as a front yard.

1. ~~The width of the lot or parcel of land will determine the percentage~~ That 50 % of open space in a front yard that can be paved for vehicular parking:

   ~~16- 60 feet 15%~~

   ~~60-120 feet- 40 %~~

   ~~➢ Than 120 feet 50%~~

Attachment: Ordinance 2014-050 parking in yards [Revision 6] (1093 : Ord No. 2014-050 Parking in yards)

Publish

~~2. No tree removal is allowed to create a paved surface unless the remaining open space has another tree.~~

(b) Exceptions and exclusions:

>

The provisions of this subsection shall not apply on nationally recognized holidays or to special private events, such as ,but not limited to a private party or reception, if the private event lasts no more than six (6) hours during one (1) calendar day. Special events as referenced in the Public Amusement Ordinance (161-2010) require a special application and permit.

Any vehicles engaged in public service work or repair services, such as utilities, drainage and/or street maintenance, delivery vehicles or contractors shall be exempt.

(c) Violation:

~~**It shall be unlawful to park any vehicle in the front yard of a residential property unless parked on a paved surface.**~~
No person, including any owner, tenant, manager, or occupant of property used as a residence, shall allow or suffer any person to, keep, store or park any motor vehicle on any portion of a front yard or corner street side yard of any property used as a residence, except on a paved surface as defined herein above.

(~~c~~d) Enforcement:

~~Code enforcement would be the first contact notifying the owner of the ordinance and compliance requirements. Also, law enforcement may write a citation. After either of these contacts, municipal court proceedings may assess fines.~~

~~Fines would be as per the Municipal Code of Ordinances up to $500 $200 dollars per day.~~

This code may be enforced by City code enforcement personnel or law enforcement. The first instance of a violation shall be by Warning Order to the Owner of the premises in violation, such notice provided at the premises, and by Warning Order to the owner of the violating motor vehicle, such notice provided at the vehicle. Other instances of violation may be by citation and assessment of fines as determined by the municipal court up to $200 per day.

(f) Exception:

The City Manager (or designee) may approve variances from the provisions established above provided the property owner can evidence a circumstance or hardship unique to the property. The City Manager (or designee) shall issue a written decision on any variance granted or request denied within 30 days of the request for variance. Appeals from the administrative judgment of the staff shall be filed with the ~~Board of Adjustment~~ City Council. The content of the filing shall consist of: (1) A cover letter addressed to the ~~chairman and members of the board of adjustment~~ Mayor and City Council setting forth the request (2) a copy of all pertinent graphic materials or correspondence or other materials to

Publish

be used to support the appeal. This filing shall occur within thirty (30) calendar days of the written decision by the staff. The ~~Board of Adjustment's~~ City Council decision is final.

SECTION 2: That the City Secretary be and is hereby directed to publish the caption of this Ordinance for three (3) successive days in the Texarkana Gazette within ten (10) days of the passage of this Ordinance, as provided in Article XI, Section 3 of the Charter of the City of Texarkana, Texas.

SECTION 3: That in case a section, clause, sentence or part of this Ordinance shall be deemed or adjudged by a Court of competent jurisdiction to be invalid, then such invalidity shall not affect, impair or invalidate the remainder of this Ordinance.

SECTION 4: That all ordinances or parts of ordinances in conflict herewith are specifically repealed to the extent of such conflict.

SECTION 5: That this Ordinance shall be in full force and effect ten (10) days after its passage an approval.

PASSED AND APPROVED in Regular Council Session on this the 9th day of June, 2014.

ATTEST:

_____ _____

JENNIFER EVANS, CITY SECRETARY BOB BRUGGEMAN, MAYOR

Attachment: Ordinance 2014-050 parking in yards [Revision 6] (1093 : Ord No. 2014-050 Parking in yards)

Residents may not park on their lawns within San Antonio city limits.

Residents are not allowed to park their vehicles on the front or side lawn of their home unless there is a permanent surface of concrete, brick, asphalt or gravel with defined borders designated for parking.

Sec. 19-194. Parking of certain vehicles prohibited on certain streets, and parking of certain motor vehicles prohibited on front lawns of residential zones.

(a) It shall be unlawful for any person owning or having control of any oversized vehicle as defined in chapter 35 of this Code, to park the same in front of any lot or parcel used solely for a residential use (to include home occupations) within a special district, as defined in chapter 35of this Code, or zoned FR, RD, or UD or upon any street within the following residential zoning districts: FR, R-3, R-4, R-5, R-6, R-20, RM-4, RM-5, RM-6, NP-8, NP-10, NP-15, MH, MF-25, MF-33, MF-40, MF-50, or residential PUD or other planned residential districts, according to the zoning provisions of the city (chapter 35) at all times. This section shall not apply to the parking of such vehicles for such time as is actually necessary to load or unload passengers, freight or merchandise.

(b) No oversized vehicle of any type shall be parked at any time within the restricted parking area as defined in chapter 35 in any of the residential districts as listed in subsection (a) above, provided, however, this section shall not apply to the parking of such vehicles for such time as is actually necessary to load or unload passengers, freight or merchandise, or if the oversized vehicle bears a valid special handicapped parking permit as allowed in section 35-385 of this Code. In addition, an oversized vehicle, other than one that is also defined as a truck-tractor, road-tractor, semi-trailer, trailer or commercial motor vehicle with three (3) or more axles, may be parked within the restricted parking area for such time as is actually necessary for trip preparation as allowed in section 35-385 of this Code.

(c) In this section, the terms truck-tractor, road-tractor, semitrailer, trailer, and commercial motor vehicle shall not mean nor include a recreational vehicle.

(d) It shall be unlawful for any person owning or having control of a motor vehicle, water craft, non-motorized camper, or any trailer designed to be pulled by a motor vehicle and/or to carry a watercraft, camper or motor vehicle to park or allow same to be parked at any time in the side yard setback or front yard, as defined in chapter 35 of this Code, or in any area between the property line of the lot and the curb line or the edge of the adjacent street within any of the residential districts as listed in subsection (a); provided, however, that motor vehicles, watercrafts on trailers, campers and other trailers may be parked only on the side yard set back or front yard with all wheels on permanently maintained parking areas constructed of:

(1) Gravel with barriers or permanent curbing to define the driveway;

(2) Concrete;

(3) Brick; or

(4) Asphalt; extending from the curb, street, or alley in a contiguous course, and only where such parking areas are no wider than the width established by subsection (e). Recreational vehicles may be parked in accordance with the provisions of section 35-385 for the purposes of trip preparation, however nothing in this subsection shall invalidate the provisions for

oversized or recreational vehicles listed in this chapter or chapter 35 of this Code nor permit the parking of such vehicles in a manner inconsistent with subsection (b) or section 35-385.

(e) The gravel, concrete, or asphalt parking area referred to in subsection (d) shall be no wider than fifty (50) percent of the average width of the lot, except in the following situations:

(1) The vehicle is parked at a residential building which does not meet the minimum setback requirements as set out in chapter 35; or
(2) The vehicle is parked at a residential building where the width of the lot is twenty-five (25) feet or less; or
(3) The vehicle is parked at a residential building abutting a street which is curbless or which is less than thirty (30) feet wide.
(4) The specific zoning for the lot sets a maximum for such widths.

(f) The authority to enforce the provisions of this section shall be vested in the police department and with the code compliance department.

(g) For purposes of this section, proof that the vehicle was, at the time of the offense alleged, owned by the person charged with the offense, shall constitute prima facie evidence that the vehicle was parked or left standing at the place charged by the owner; but the owner shall have the right to introduce evidence to show that the vehicle was not parked by him as charged in the complaint.

(h) This section shall be enforced as prescribed in section 19-225 of this Code.

ORDINANCE NO.____

AN ORDINANCE TO AMEND CHAPTER 36 OF THE CODE OF ORDINANCES OF THE CITY OF LITTLE ROCK, ARKANSAS, PROVIDE FOR VARIOUS PROCEDURES AND LAND USE REGULATIONS REGARDING PARKING OF MOTOR VEHICLES IN FRONT YARDS OR CORNER STREET SIDE YARDS OF RESIDENTIAL PROPERTIES; AND FOR OTHER PURPOSES.

WHEREAS, the Board of Directors of the City of Little Rock, Arkansas, finds that the parking of motor vehicles on the front yards or corner street side yards of residential properties in areas not paved or designated for parking results in the problems of standing water and the carrying of dust and dirt upon public streets and has a detrimental effect upon the esthetics of residential neighborhoods; and

WHEREAS, the Board of Directors of the City of Little Rock, Arkansas finds that it is in the best interest of the City to regulate parking in the front yards and corner street side yards of properties used as a residence; and

WHEREAS, the proposed regulations were presented and discussed at a public hearing of the City of Little Rock Planning Commission where the Planning Commission voted to recommend approval of the proposed regulations.

NOW, THEREFORE, BE IT ORDAINED BY THE BOARD OF DIRECTORS OF THE CITY OF LITTLE ROCK, ARKANSAS:

Section 1. That Chapter 36, Section 36-513 be deleted in its entirety and replaced with the following text:

Sec. 36-513. Motor Vehicle parking on residential properties.

(a) Any portion of a lot, tract or parcel of land zoned for residential use may be utilized for the parking of motor vehicles unless prohibited by other provisions of the zoning ordinance.

(b) For purposes of this section, "Motor vehicle" means a passenger vehicle, truck, boat, camper, recreational vehicle, motorcycle, golf cart, all-terrain vehicle, trailer, or other similar vehicle. "Motor vehicle" does not include a motorized wheelchair, bicycle, tricycle or quadri cycle. "Paved" means treated or covered with concrete, asphalt, pavers or other similar material and maintained in such a manner as to provide a mud-free and dustless surface.

Attachment: Parking in Yards Ordinance Little Rock AR (1093 : Ord No. 2014-050 Parking in yards)

(c) For purposes of this section, “front yard” and “corner street side yard” mean the open space between the pavement of the street and a line as established in this section, extending from one side of the lot to the opposite side of the lot.

As viewed from the street, the line shall start at a point on the left lot line, and shall extend parallel to the street to the nearest corner of the principal structure and then along the face of the principal structure to the right corner, and from that point on a line parallel to the street to a point on the right lot line (Figure 1).

FIGURE 1

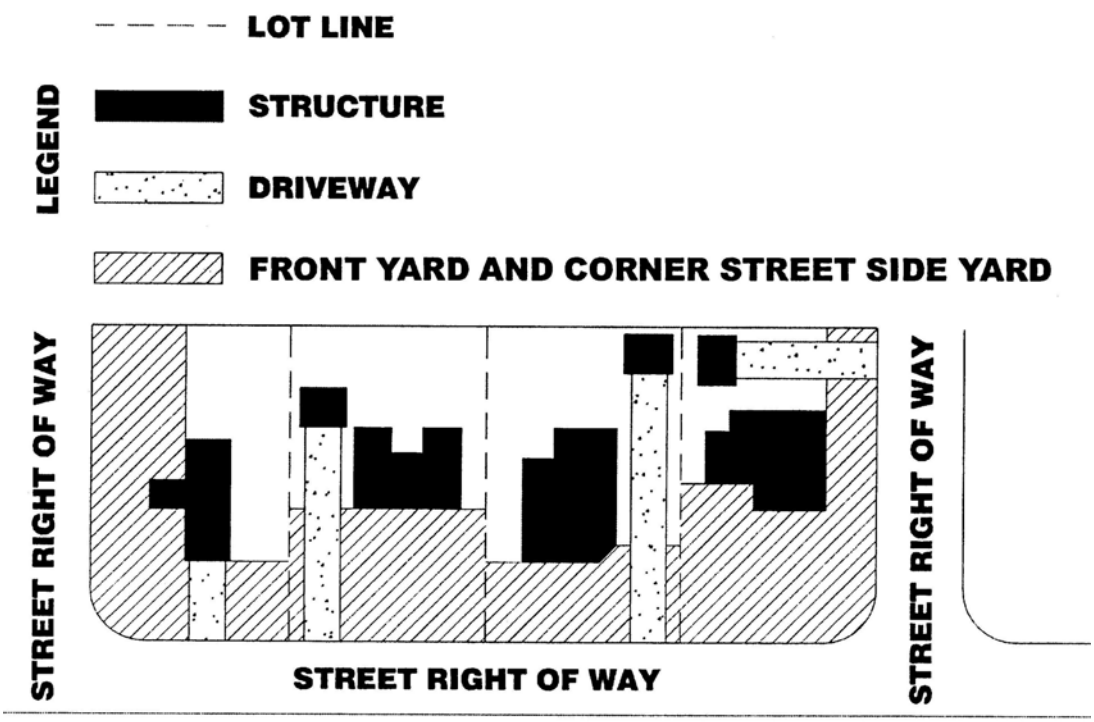

(d) No person, including any owner, tenant, manager, or occupant of property used as a residence, shall allow any person to, keep, store or park any motor vehicle on any portion of a front yard or corner street side yard of any property used as a residence, except on a paved surface or on an unpaved designated driveway area and parking pad not to exceed twenty (20) feet in width. The unpaved, designated driveway area must be surfaced with gravel or a similar material or hard-packed in a manner that does not result in the creation of dust, mud, silt or standing water. For purposes of this subsection:

(i) The twenty foot (20’) width limitation shall not apply to a paved driveway to a garage or carport, provided the paved driveway does not exceed in width

Attachment: Parking in Yards Ordinance Little Rock AR (1093 : Ord No. 2014-050 Parking in yards)

the width of the garage of carport;

(ii) *Hard packed* means any improved surface that is stabilized and provides appropriate dust control and limited permeability including paved pavers, concrete, asphalt, or other similar parking material;

(iii) The provisions of this subsection shall not apply to special public events such as, but not limited to, football games at War Memorial Stadium, or the Arkansas State Fair and Livestock Exposition;

(iv) The provisions of this subsection shall not apply on nationally recognized holidays, or to special private events such as, but not limited to, a private party or reception, if the private event lasts no more than six (6) hours during one calendar day;

(v) Any residential parking area that is not paved shall be delineated in some manner that clearly identifies a stationary twenty (20) foot parking area;

(vi) The designated parking area required by this subsection shall be perpendicular to the street, provided that this requirement does not apply to a parking area that is part of a circular drive;

(vii) No delineated or paved parking area shall have more than one twenty foot by twenty foot (20' x 20') flagpole, in addition to any paved driveway that is no greater in width than the width of the garage, which for this section means an area that can be used for additional parking, the permitted parking of a boat or another vehicle, or that can be used to assist in turning a vehicle in order to enter an adjacent street.

(e) No owner, tenant, manager or occupant of property used as a residence shall allow or suffer another person to keep, store or park any motor vehicle, whether operable or inoperable, on any portion of a front yard or corner street side yard of any property used as a residence, except on a paved surface or on an unpaved, designated driveway area and parking pad not to exceed twenty (20) feet in width. The unpaved, designated driveway area must be surfaced with gravel or a similar material or hard-packed in a manner that does not result in the creation of dust, mud, silt or standing water.

(f) The planning director may approve variances from the provisions established by section 36-513 provided the property owner can evidence a circumstance or hardship unique to the property. Appeals from the administrative judgment of the staff shall be filed with the board of adjustment. The content of the filing shall consist of: (1) A cover letter addressed to the chairman and members of the board of adjustment setting forth the re-

Attachment: Parking in Yards Ordinance Little Rock AR (1093 : Ord No. 2014-050 Parking in yards)

quest; (2) a copy of all pertinent graphic materials or correspondence. This filing shall occur within thirty (30) calendar days of the action by the staff.

(g) Nothing contained in this section is intended to nor shall be construed or interpreted to permit parking that is prohibited or restricted by any other provision of this code.

(h) No keeping, storing or parking of any motor vehicle in violation of this section shall be deemed to be nonconforming under Article III of this chapter.

Section 2. ***Severability.*** The various parts, sections and clauses of this ordinance are hereby declared to be severable. If any part, sentence, paragraph, section, clause or word is adjudged unconstitutional or invalid by a court of competent jurisdiction, the remainder of this ordinance shall not be affected thereby.

Section 3. ***Repealer.*** Any ordinances or parts thereof in conflict with the provisions of this ordinance are hereby repealed to the extent of such conflict.

Section 4. This ordinance shall be in force and effect on April 1, 2010.

PASSED:

ATTEST: **APPROVED:**

_____ _____

Susan Langley, Acting City Clerk **Mark Stodola, Mayor**

APPROVED AS TO LEGAL FORM:

_____

Thomas M. Carpenter, City Attorney

K:/ORD/RDC3269.wpd

City of Houston, Texas, Ordinance No. 2009-59

AN ORDINANCE AMENDING CHAPTER 28 OF THE CODE OF ORDINANCES, HOUSTON, TEXAS, RELATING TO THE PARKING OF VEHICLES ON CERTAIN RESIDENTIAL PROPERTIES; CONTAINING OTHER PROVISIONS RELATING TO THE FOREGOING SUBJECT; PROVIDING A PENALTY; PROVIDING FOR SEVERABILITY; PROVIDING AN EFFECTIVE DATE; AND DECLARING AN EMERGENCY.

* * * * *

WHEREAS, the City Council Committee on Regulation, Development and Neighborhood Protection ("Committee") has held one or more meetings to consider a prohibition against the parking of vehicles on any surface that is not improved in the front or side yards of certain single-family residential properties in the city; and

WHEREAS, the Committee has recommended the adoption of restrictions on the parking of vehicles on any surface that is not improved in the front or side yard of certain residential properties in the city to address concerns of public interest, namely:

1. Diminution of property values in single-family residential areas where the parking of vehicles in specified areas of residential properties in the city is prevalent;

2. The degradation of the aesthetic appearance of single-family residential areas where the parking of vehicles in the front or side yards of residential properties of such is a significant or common practice; and

3. Damage to underground infrastructure caused by the weight of vehicles parked over such infrastructure, resulting in loss of water and other conditions contrary to the public interest.

WHEREAS, the City Council desires to enact regulations to address and mitigate the negative effects set forth in the preceding recitals in affected single-family residential areas resulting from the conduct of those who park vehicles on any surface that is not improved in the front or side yards of residential properties in violation of such regulations; and

Attachment: Parking of vehicles on certain residential properties Houston TX (1093 : Ord No. 2014-050 Parking in yards)

WHEREAS, the Committee has voted to recommend to the City Council the passage of regulatory provisions designed to address the practices specified in the foregoing recitals to protect the public health, safety and welfare: **NOW, THEREFORE**

BE IT ORDAINED BY THE CITY COUNCIL OF THE CITY OF HOUSTON, TEXAS:

Section 1. That the findings contained in the preamble of this Ordinance are determined to be true and correct and are hereby adopted as part of this Ordinance.

Section 2. That Chapter 28 of the Code of Ordinances, Houston, Texas, is hereby amended by adding a new Article X, to be entitled "Parking of Vehicles on Residential Properties," to read as follows:

"ARTICLE X. PARKING OF VEHICLES ON RESIDENTIAL PROPERTY

Sec. 28-301. Purpose.

The purpose of this article is to regulate the parking of vehicles or equipment on any surface that is not an improved surface in the front or side yard areas of an improved single-family residential lot to prevent damage to underground infrastructure that would be caused by the weight of vehicles parked over such infrastructure and which would also result in unsightly and permanent damage to such areas, thereby having a negative effect on the aesthetics of single-family residential areas affected by such practices and the property values of residences in those affected areas. This article shall not apply to the parking of any vehicle subject to article XIII of chapter 10 of this Code or Chapter 683 of the Texas Transportation Code.

Sec. 28-302. Definitions.

The following words, terms and phrases, when used in this article, shall have the meanings ascribed to them in this section, except where the context clearly indicates a different meaning:

Blockface means that portion of a block that abuts a street between two intersecting streets, or between an intersecting street and the termination of the street.

Civic club means an association, whether or not incorporated, that encompasses a residential area and that, by means of action or efforts by such association or its membership, actively seeks to

Attachment: Parking of vehicles on certain residential properties Houston TX (1093 : Ord No. 2014-050 Parking in yards)

promote or protect the interests of the area as a separate or identifiable neighborhood or community. At a minimum, a civic club shall have or maintain a name related to or identifying its connection to a residential area, a membership list, a slate of officers, whether paid or volunteers, and a means of communicating with owners of residences in the area on issues or matters of interest to that residential area.

Director means the director of the department of planning and development or his designee.

Front yard means an area extending the full width of an improved single family lot between its side property lines, the front property lot line and a line that is an extension of the front line of the residential structure located on a lot, excluding a driveway. The front yard of a corner lot shall be determined by the street address of the residence located on such lot.

Homeowners association has the meaning ascribed in section 47-601 of this Code.

Improved surface means an area, excluding a driveway, the surface of which is comprised of selected materials constructed to a depth sufficient to distribute the weight of a vehicle or equipment over such area to preclude deterioration and deflection of the area due to vehicle or equipment load, adverse weather, or other conditions. Examples of materials with which an improved surface might be constructed include asphalt, concrete, permeable pavement, or other materials approved by the director of the department of public works and engineering or his designee.

Lot means contiguous land under common ownership, as shown on the most recently approved ad valorem tax rolls of the city, that is used or developed as a unit for residential or nonresidential uses, regardless of whether the land consists of a platted lot or a portion of a platted lot or a combination thereof. Two or more platted lots that have been combined in their entireties as a single building site shall not constitute a single lot for purposes of an application or petition filed pursuant to this article.

Park has the meaning ascribed in section 26-2 of this Code.

Owner means the owner of a single-family residential lot in a residential area that seeks the application of this section to such residential area, as such ownership is reflected in the records of the

Attachment: Parking of vehicles on certain residential properties Houston TX (1093 : Ord No. 2014-050 Parking in yards)

Harris County Appraisal District at the time of the filing of an application or petition as defined in this article.

Residential area means an area in which not less than 60% of the lots are developed and used for single-family residential structures and purposes.

Side yard means an area of an improved single-family lot circumscribed by a line parallel to and extending along the side of a residential structure located on the lot which line is joined at right angles by lines parallel to and that extend along the front and rear lines of the residential structure on the lot to the side property line of the lot, excluding a driveway.

Single-family residential has the meaning ascribed in section 42-1 of this Code.

Vehicle or equipment means and includes any house trailer, mobile home, motor vehicle, truck, passenger motor vehicle, motor home, camper cabin, motorcycle, trailer, boat, farm machinery or similar equipment or any truck with more than two axles or any trailer, mobile home or motor home with a length exceeding twenty feet.

Sec. 28-303. Parking of vehicles prohibited in certain residential areas; application and procedures.

(a) *Application of section.* This section shall apply to those residential areas designated by ordinance of the city council in accordance with the procedures outlined in this section.

(b) *Offense.* It shall be an offense for any person to park or to cause, suffer or permit the parking of a vehicle or equipment on any surface that is not an improved surface as defined in this article, within any front or side yard of a single-family residence in a residential area subject to this section. It is presumed that the registered owner of the vehicle or equipment is the person who parked, caused, suffered or permitted the vehicle or equipment to be parked in violation of this article.

(c) *Application; petition; who may file.* A request to apply this section to a residential area shall be initiated by filing with the director a written application or petition as follows:

(1) An application authorized by the board and signed by the president of an active homeowners association or civic club that encompasses the residential area described in the application; or

Attachment: Parking of vehicles on certain residential properties Houston TX (1093 : Ord No. 2014-050 Parking in yards)

(2) A written petition signed by at least 60% of the owners within the area.

(d) *Application; petition; submittal.* Applications and petitions will be accepted by the director only if submitted no later than 5:00 p.m. on either of the first two business days of each month.

(e) *Written application or petition; information required.* An application or petition shall contain such information as the director shall require, including the following:

(1) A map of the proposed boundaries of the residential area requested to be made subject to this section. If the residential area is defined by a plat or map duly filed of record, a reference to such plat or map shall be sufficient; and

(2) If the request is a letter from a homeowners association or civic club, the name, mailing address, telephone number and email address of a person with the homeowners association or civic club or an owner within the area described in item (1) of this subsection who shall be the contact for the request; or

(3) If the request is in the form of a petition, the name and mailing address, including street number, street name and zip code, of all signers of the petition, one of whom shall be designated in the petition as the contact for the request. Each signer of a petition, by his or her signature, shall be deemed to have affirmed that such person is an owner within the residential area described therein, and a statement to that effect shall appear on the face of the petition.

(f) *Residential area; size and configuration requirements.* The description of a residential area in an application or petition shall include at least five contiguous blockfaces.

(g) Filing of request; review and action by director. The application or petition referenced in the preceding subsection shall be filed with the director, and upon receipt, the director shall determine whether such application or petition is complete. An incomplete application or petition shall be returned to the contact person named therein, specifying its deficiencies. Upon being revised to comply with this section, the application or petition may be re-filed with the director at a subsequent filing date.

(h) *Notice required by applicant.* Within ten days after the filing of a complete application or petition, the party filing such application or petition shall provide notice thereof to all owners by:

Attachment: Parking of vehicles on certain residential properties Houston TX (1093 : Ord No. 2014-050 Parking in yards)

(1) The posting of signs on private property at such locations and containing such information as the director shall prescribe; and

(2) At least one of the following methods:

a. An electronic message directed to all owners within the residential area;

b. Inclusion in a newsletter or other similar publication customarily used by the neighborhood association or civic club to disseminate information of interest to all owners within the residential area; or

c. Any other writing or publication deemed by the party making the request as the most effective means of providing notice of such filing to all owners within the residential area.

(3) All signs required to be posted by this subsection shall remain in place continuously until either:

a. The city council passes an ordinance applying this section to the residential area or acts to deny the application or petition; or

b. If the application or petition was been referred to a hearing officer as provided in subsection (l) of this section, the hearing officer determines that the application or petition fails to meet the requirements of this section or any criteria prescribed by the director.

(4) All costs to prepare, install, maintain and remove the signs required by this subsection shall be borne by the party filing the application or petition required by subsection (c) of this section.

(i) *Notice required by director.* Within ten days after the filing of a complete application or petition, the director shall give written notice thereof to all owners within the residential area. A failure by the director to provide the notice required by this subsection, or failure of any owner to receive such notice, does not affect the validity or finality of decisions reached under this article.

(j) *Protest; deadlines.* An owner may protest an application or petition by timely filing a written protest with the director within 20 days after the date of the director's notice letter.

Attachment: Parking of vehicles on certain residential properties Houston TX (1093 : Ord No. 2014-050 Parking in yards)

(k) *Approval by director.* The director shall approve an application or petition and refer the matter to the city council for final action upon determining that:

(1) The notice provisions of subsection (h) of this section have been fully and timely performed or completed; and

(2) No protest of such application or petition was filed within the period specified in subsection (j) of this section.

(l) *Public hearing; hearing officer.* Upon the receipt by the director of a timely filed protest to an application or petition, the director shall refer such application or petition to a hearing officer whom he shall appoint to conduct a public hearing to determine whether the application or petition should be recommended to the city council.

(m) *Approval criteria.* The hearing officer shall base his determination on an application or petition by applying the evidence presented at the hearing to the following criteria:

(1) The application or petition complied with items (1) or (2) of subsection (c) of this section;

(2) The evidence presented shows that the residential area described in the application or petition contains at least five contiguous blockfaces; and

(3) The curbside parking spaces or areas within the residential subdivision available to owners for the parking of vehicles or equipment are sufficient to accommodate the number of vehicles or equipment typically parked within the area.

If the evidence presented at the hearing demonstrates to the satisfaction of the hearing officer the likelihood that the parking of vehicles or equipment in the front or side yards of residences in the residential area has caused, or is presently causing, a diminution in the value of the residences in such area, degrades the aesthetic appearance of the neighborhood, or tends to damage underground infrastructures leading to the loss of water or other conditions contrary to the public interest, the hearing officer shall recommend the application or petition favorably to the city council. The hearing officer's determination shall be set forth in writing, copies of which shall be provided to any interested party upon request. In the absence of any such finding, the application or petition shall be denied.

(n) *Public hearing; notice required; final action.*

Attachment: Parking of vehicles on certain residential properties Houston TX (1093 : Ord No. 2014-050 Parking in yards)

(1) The public hearing provided in subsection (l) shall not be held until after the notice requirements of subsections (h) and (i) of this section have been satisfied and the time for filing a protest or opposition to an application or petition, as set forth in subsection (j) of this section, has expired.

(2) Notice of a public hearing shall be provided by the hearing officer at least 15 days prior thereto and shall contain the date, time and location of such hearing. The notice shall be provided to the contact person listed in an application or petition made pursuant to subsection (c) of this section, and to all persons filing a protest to an application or petition within the period set forth in subsection (j) of this section.

(3) The hearing officer shall take final action on a request referred to him by the director not later than the sixtieth day following the director's receipt of a written request, unless the hearing date is extended pursuant to subsection (o) of this section.

(o) *Action by hearing officer.* At the conclusion of the public hearing, the hearing officer shall either:

(1) Recommend that the city council pass an ordinance extending the application of this section to the requesting residential area;

(2) At his sole discretion, grant one continuance of the public hearing to a date certain in the future to allow for the provision of additional information relating to any issue arising during such hearing; provided, that the continuance shall not extend more than 15 days from the date of the original hearing; or

(3) Deny the request, which action of the hearing officer shall be final.

(p) *Submission to city council.* If the hearing officer makes the recommendation set forth in item (1) of the preceding subsection, the director shall promptly refer the matter to the city council for final action.

(q) *Action by city council.* Upon consideration of the recommendation of a hearing officer pursuant to subsection (o) of this section, the city council shall either:

(1) Adopt an ordinance extending the application of this section to the requesting residential area; or

Attachment: Parking of vehicles on certain residential properties Houston TX (1093 : Ord No. 2014-050 Parking in yards)

(2) Deny such recommendation and request, which action shall be final in all respects.

The city secretary shall provide a true and correct copy of any ordinance extending the application of this section to a residential area to the neighborhood protection official and the parking official and shall cause a certified copy of such ordinance to be recorded in the real property records of each county in which the residential area is located.

(r) *Effective date; term of application.* An ordinance extending the application of section 28-303 of this Code to a residential area shall be in force as of its effective date and shall terminate 20 years after such effective date, unless earlier terminated by an ordinance adopted by the city council.

(s) *Re-filing of request.* In the event of a denial of a request under this article by either a hearing officer or the city council, no further request shall be filed for the same neighborhood or residential area, or portion thereof, within the six months following the date of such denial; provided, however, if new information is submitted to the director indicating a material change in off-street parking practices within the residential area sufficient to warrant the filing of a new application or petition, the director may waive the six month limitation.

(t) The director shall be authorized to promulgate rules and procedures for the efficient administration of this section, including provisions for the issuance of temporary permits that allow, on a limited basis and for a limited period, the parking of vehicles or equipment in areas where such conduct is otherwise prohibited by this section.

Sec. 28-304. Enforcement.

The provisions of this article may be enforced by any law enforcement officer, the neighborhood protection official or the parking official.

Sec. 28-305. Penalty.

Any person who violates any provision of this article shall be guilty of a misdemeanor and, upon conviction thereof, shall be punished by a fine not to exceed $150.00. Each day a violation of this article shall continue shall constitute a separate offense."

Section 3. That, if any provision, section, subsection, sentence, clause, or phrase of this Ordinance, or the application of same to any person or set of circumstances, is for

Attachment: Parking of vehicles on certain residential properties Houston TX (1093 : Ord No. 2014-050 Parking in yards)

any reason held to be unconstitutional, void or invalid, the validity of the remaining portions of this Ordinance or their application to other persons or sets of circumstances shall not be affected thereby, it being the intent of the City Council in adopting this Ordinance that no portion hereof or provision or regulation contained herein shall become inoperative or fail by reason of any unconstitutionality, voidness or invalidity of any other portion hereof, and all provisions of this Ordinance are declared to be severable for that purpose.

Section 4. That there exists a public emergency requiring that this Ordinance be passed finally on the date of its introduction as requested in writing by the Mayor; therefore, this Ordinance shall be passed finally on such date and shall take effect at 12:01 a.m. on the forty-fifth day next following the date of its passage and approval by the Mayor.

PASSED AND APPROVED this 28th day of January, 2009.

Bill White

Mayor of the City of Houston

Prepared by Legal Dept. Don Crestleazm
RDC:asw 01/13/2009 Senior Assistant City Attorney
Requested by City Council Committee on Regulation, Development and Neighborhood Protection
L.D. File No. 0180600005001

CAPTION PUBLISHED IN DAILY COURT REVIEW
DATE: FEB 0 3 2008

Attachment: Parking of vehicles on certain residential properties Houston TX (1093 : Ord No. 2014-050 Parking in yards)

PARKING RESTRICTED IN YARDS

City Ordinance 300.45(E) Parking Requirements

E. Restricted areas. No front yard of any residential district and no front yard of a lot in any business district upon which a dwelling unit is loc shall be used for the parking of a motor vehicle except in approved driveways which may not exceed 30% of the width of the lot or 24 feet, whichever is greater, except in multifamily districts where up to 50% of the width of the front yard or 24 feet, whichever is greater, may be utilized for driveways and parking of motor vehicles in approved driveways. Motor vehicles parked on any other front yard shall not be permitted within five feet of the right-of-way line of a street.

Attachment: PARKING MOTOR VEHICLES IN YARDS RESTRICTED Jefferson (1093 : Ord No. 2014-050 Parking in yards)

From: rbbruggeman@aol.com
To: tmcoleman@cableone.net
Cc: TEX-Whitson, John; TEX-Veal-Gooch, Tina (Work); TEX-Evans, Jennifer
Subject: Re: Parking in yards
Date: Tuesday, July 16, 2013 3:41:32 PM

Tom,

Thank you for the note. This is indeed an issue that needs some attention. Thank you for providing the information based on your obversations. This information is very helpful.

I also want to thank you for the great job that you do serving on the Texarkana College Board of Trustees!

Sincerely,

Bob

-----Original Message-----
From: Tom Coleman <tmcoleman@cableone.net>
To: rbbruggeman <rbbruggeman@aol.com>
Sent: Tue, Jul 16, 2013 1:05 pm
Subject: Parking in yards

Mayor Bruggeman, we are so pleased that the city is discussing the parking in yards problem. Ann and I live on Wood Street and we hate to see our neighborhood trashed by this problem. There are 50 homes in our neighborhood today with vehicles parked in their yards. At 10am this morning between College and 14th street I observed the following. Magnolia street 13 homes with vehicles in yards, Hazel, 6 homes, Walnut, 14, Wood street 11, Olive, 3 and Pine street 3. This is totally unnecessary everyone of these homes but one all have driveways and many have alley access to parking. Please help us correct this eyesore.

Tom and Ann Coleman

NOTES FOR THE POSSIBLE PARKING ORDINANCE:

PANEL

Craig Lindholm, Lynn Henry, Kenneth Steele, Cody Harris, Shirley Jaster

Placement and purpose of Ordinance:

Municipal Code of Ordinances, Texarkana, Texas

To prohibit vehicular parking in the front yard of any single family residential zone on any unpaved surface.

Definitions:

Motor vehicle- a passenger vehicle, truck, boat , camper , recreational vehicle, motorcycle, golf cart, all-terrain vehicle, trailer, or other similar vehicle. Motor vehicle does not include a motorized wheelchair, bicycle, tricycle or quadricycle.

Paved surface- means treated or covered with concrete, asphalt, pavers or other similar material and maintained in such a manner as to provide a mud- free and dustless surface. City Engineer shall determine if material meets criteria.

Front yard- any open space between the pavement of the street to the front exterior wall of the structure and a line extending from one side of the lot or parcel of land to the opposite side of the lot or parcel of land. This also includes corner street side yard as a front yard.

1. The width of the lot or parcel of land will determine the percentage of open space in a front yard that can be paved for vehicular parking:
   16- 60 feet – 15%
   60-120 feet- 40 %
   - Than 120 feet – 50%
2. No tree removal is allowed to create a paved surface unless the remaining open space has another tree.

Exceptions and exclusions:

The provisions of this subsection shall not apply on nationally recognized holidays or to special private events, such as ,but not limited to a private party or reception, if the private event lasts no more than six (6) hours during one (1) calendar day. Special events as referenced in the Public Amusement Ordinance (161-2010) require a special application and permit.

Any vehicles engaged in public service work or repair services, such as utilities, drainage and/or street maintenance, delivery vehicles or contractors shall be exempt.

Attachment: NOTES FOR THE PARKING ORDINANCE (1093 : Ord No. 2014-050 Parking in yards)

Enforcement:

Code enforcement would be the first contact notifying the owner of the ordinance and compliance requirements. Also law enforcement can write a citation. After either of these contacts, municipal court proceedings could assess fines.

Fines would be as per the Municipal Code of Ordinances up to $500 dollars per day.

Note - if City Council wishes to proceed with an Ordinance, legal counsel would need to review these procedures.

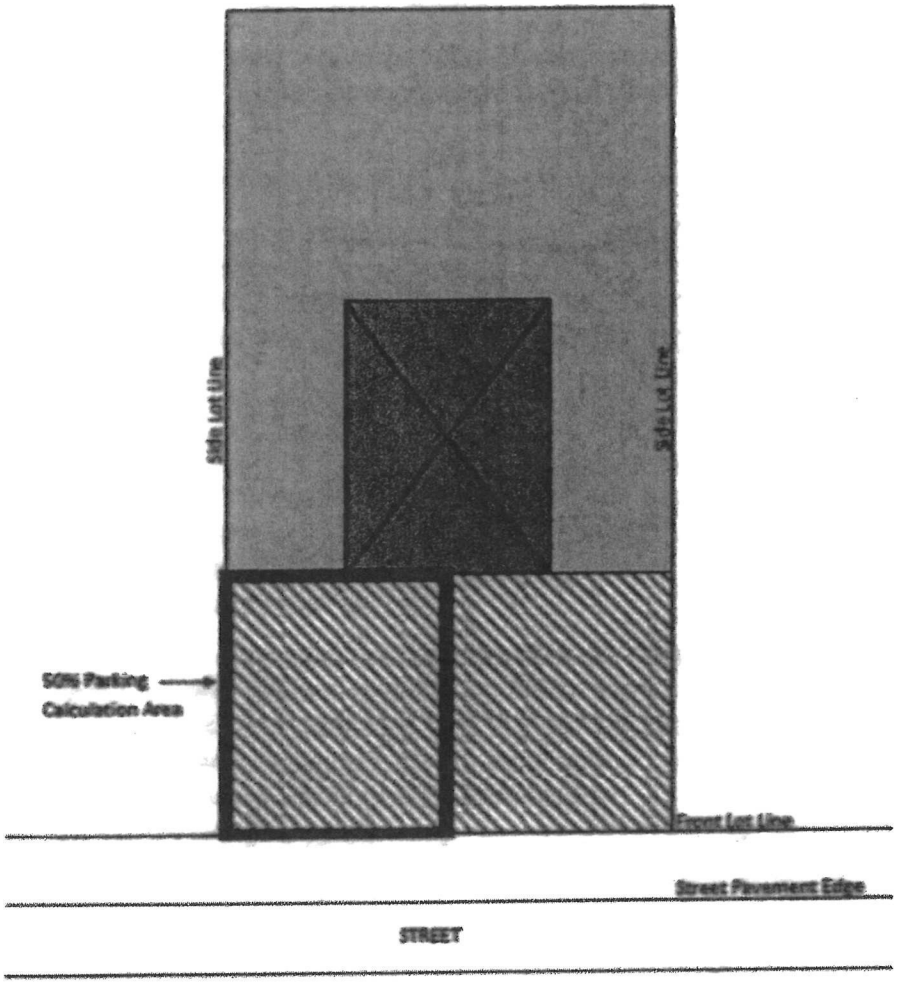

Attachment: Parking in Yards 50% diagram (1093 : Ord No. 2014-050 Parking in yards)

City of Texarkana, Texas

Version: H

Briefing Sheet

Update Date: 6/4/2014 3:54 PM

Lead Department: Public Works **Action Officer:** Debbie Burk,

Subject: Ordinance No. 2014-052 granting a Specific Use Permit to allow the location of a CEVMS (digital) billboard on a part of Tract 18, George Brinlee HRS, A-18, located at 2506 Richmond Road. Mark Liepman, owner. Chad Shipp, Shipp Outdoor, LLC, agent. (Due to Planning and Zoning Commission denial, a 3/4 vote by the City Council is required to approve this request). Or Consider Resolution No. 2014-052 to direct the Planning and Zoning Commission to develop and recommend additional regulations for off premise advertising signs(Billboards) in accordance with the Texas Department of Transportation (TxDOT) rules.

Briefing:	6/23/2014	**Public Hearing:**	5/12/2014	**Second Briefing:**	May 27, 2014	**Council Vote:**	6/9/2014

Item Schedule

Schedule 1: Brief twice - vote once (six weeks)

Updates/History of Briefing:

A public hearing was held by the City Council on May 12, 2014 and the following citizens spoke about the electronic billboard

For:

Amy Thomas
Tracey Prather
Brian Goesel
Chad Shipp
Joel Orr
Shanna Richardson

Against:

Tom Sadowski
Julie Tidwell
Fred Cain
Parker Phoenix

Comments:

Ruth Ellen Whitt asked the Council to consider the overall vision for the City when making the decision on this issue.

Executive Summary and Background Information:

S-653: This is a request from Mark Liepman, owner, and Chad Shipp, Shipp Outdoor, LLC, agent, requesting a Specific Use Permit to allow the location of a CEVMS (digital) billboard on part of Tract 18, George Brinlee HRS, A-18, located at 2506 Richmond Road. This property is currently the location of the Dairy Queen Restaurant.

The adjacent zoning is General Retail to the north, south east and Commercial to the west. The adjacent land use is Little Caesar's Pizza restaurant to the north, a car title loan business to the south, a parking lot of Super One Foods to the east and Starbucks Coffee/ Shopping Center to the west.
The Comprehensive Plan has designated this as a retail area.
Mr. Shipp is proposing to lease this property to construct an off-premise CEVMS (digital) billboard at the northeast corner of the Dairy Queen Restaurant parking lot. See attached map showing the exact location of the billboard.
General Retail zoning is required along with approval of a Specific Use Permit to allow the construction of an off-premise billboard structure. The proposed CEVMS (digital) billboard will be a double-sided, 14' x 48' in size (672 square feet) with an overall height of 42 feet'.
If approved, staff would suggest the following stipulations:

1. There will be only one billboard allowed on the property at this location (see attached legal and exhibit). The CEVMS billboard will be a 2 sided digital billboard.
2. The CEVMS billboard will be 14' x 48' in size or 672 square feet in size.
3. All State of Texas requirements for this location must be followed except when local requirements are more restrictive. Therefore, the CEVMS billboard will have an overall height not to exceed **35 feet** per the building, structure and sign height requirement in Section 10-101 of the City Zoning Ordinance.
4. Any distance requirements from existing utility lines from any utility company.

Potential Options:

1. Approve or deny Ordinance for the billboard at 2506 Richmond Road.
2. Approve the Resolution to direct P & Z to develop billboard regulations.

Fiscal Implications:

None

Staff Recommendation:

Staff recommends for denial of this request. Staff is concerned that allowing a CEVMS billboard on Richmond Road would set a precedent for similar requests.

Advisory Board/Committee Review:

Board/Committee Recommendation:

The Planning and Zoning Commission unanimously recommended for denial of this request. The Commission has consistently been opposed to any type of billboards along Richmond Road. The Commission also is concerned about setting a precedent for requests for other billboards.

Due to Planning and Zoning Commission denial, a 3/4 vote by the City Council is required to approve this request.

Advisory Board/Committee Meeting Date and Minutes:

City of Texarkana, Texas

The Planning and Zoning Commission met on April 7, 2014 to consider this request and unanimously recommended for denial.

Attachments

a. Ordinance No. 2014-052 (DOCX)
b. Goals and Perspectives (DOCX)
c. Exhibit "A" attachment to Ord. # 2014-052 (legal description) (PDF)
d. Exhibit "B" attachment to Ord. # 2014-052 (rendering) (PDF)
e. Maps for Ord. # 2014-052 (PDF)
f. Ward map for Ord. # 2014-052 (PDF)
g. Richmond Road Shipp Media Presentation for Signage (PPTX)
h. Shipp Digital Sign at DQ on Richmond (PDF)
i. Shipp Outdoor - Ltrs of Supt (Ord. 2014-052) (PDF)
j. Shipp Outdoor - Prpsd Billbrd Rendering (Ord. 2014-052) (PDF)
k. Digital Billboard Facts (DOCX)
l. Dallas Billboard ordinance (PDF)
m. Ord. No. 2014-052 Digital Billboard Study Report Link (DOCX)
n. Shipp Digital Sign at DQ on Richmond Updated 20140521 (PDF)
o. RESOLUTION NO 052-2014 (DOCX)

Staff Coordination

Public Works	Shirley Jaster	Department Head Review	Completed	04/17/2014 1:48 PM
Public Information Officer	Lisa Thompson	PIO Review	Completed	04/17/2014 2:04 PM
City Manager	John Whitson	City Manager Review	Completed	04/20/2014 9:46 PM
City Council	Jennifer Evans	Meeting	Completed	05/14/2014 8:46 AM

Meeting History

04/28/14	City Council	MOVED FORWARD	Next: 05/12/14
05/12/14	City Council	MOVED FORWARD	Next: 05/27/14

The following citizens spoke at the public hearing about the proposed digital billboard:
For: Amy Thomas, Tracey Prather, Brian Goesl, Chadd Shipp, Joel Orr, and Shanna Richardson.
Against: Tom Sadowski, Julie Tidwell, Fred Cain and Parker Phoenix.
Ruth Ellen Whitt stated she was not for or against the proposed digital billboard, but asked council members to consider the overall vision for the city before making a decision on this item.
Councilmember Veal-Gooch said this issue is an opportunity to address everything in the city and would like for the Planning and Zoning Commission to develop a vision plan that would contain clutter when it comes to signage. Advertising and marketing can be done through other means. The City Council should look at the big picture and how the city will be affected in the future.

City of Texarkana, Texas

Councilmember Casteel said Texarkana is growing and businesses make money through advertising.
Councilmember Ray said that signs are very helpful while driving through a city.
Councilmember Miller suggested that the Planning and Zoning Commission design a comprehensive plan to decide and regulate signage in certain areas and on certain streets for council consideration.
The following referenced documents are attached or linked for public record purposes:
1. Digital Billboard Fact Sheet from Scenic America.
2. A comprehensive report on safety impacts of digital billboards.
<http://www.azmag.gov/Documents/pdf/cms.resource/NCHRP_Digital_Billboard_Report70216.pdf>
3. Scenic Dallas statement which verifies action taken by the City of Dallas in the year 2000.

S-653

ORDINANCE NO. 2014-052

AN ORDINANCE OF THE CITY COUNCIL OF THE CITY OF TEXARKANA, TEXAS, AMENDING THE ZONING MAP SHOWING THE LOCATION, BOUNDARY AND USE OF CERTAIN PROPERTY BY THE GRANTING OF SPECIFIC USE PERMIT NO. S-653 TO ALLOW THE LOCATION OF A CEVMS BILLBOARD ON PART OF TRACT 18, GEORGE BRINLEE HRS, A-18, LOCATED AT 2506 RICHMOND ROAD IN THE CITY OF TEXARKANA, BOWIE COUNTY, TEXAS; CONTAINING A REPEALER CLAUSE; CONTAINING A SEVERABILITY CLAUSE; AND ESTABLISHING AN EFFECTIVE DATE.

WHEREAS, an application has been filed with the City of Texarkana, Texas, requesting an Amendment to the Zoning Ordinance so as to grant a **Specific Use Permit** to allow the location of **a CEVMS billboard** on part of Tract 18, George Brinlee HRS, A-18 (Exhibit "A"), located at 2506 Richmond Road in the City of Texarkana, Bowie County, Texas; and

WHEREAS, the Planning and Zoning Commission of the City of Texarkana, Texas and the City Council of the City of Texarkana, Texas, in compliance with the laws of the State of Texas with reference to the granting of zoning classifications and changes, have given the requisite notices by publication and otherwise, and after holding hearings and affording a full and fair hearing to all property owners generally and to all persons interested and situated in the affected area and in the vicinity thereof; and

WHEREAS, after consideration of said application, the Planning and Zoning Commission of the City of Texarkana, Texas, **voted unanimously by a vote of six (6) to zero (O) to recommend denial of the petition for the request to grant a Specific Use Permit to allow the location of a CEVMS billboard (Exhibit "B")** on said property; and

WHEREAS, after consideration of said application and the recommendation of the Planning and Zoning Commission, the City Council of the City of Texarkana, Texas, does hereby find that granting the **Specific Use Permit** is in the best interest of the public health, safety, morals and general welfare of the City;

NOW, THEREFORE, BE IT ORDAINED BY THE CITY COUNCIL OF THE CITY OF TEXARKANA, TEXAS:

SECTION 1: That the Zoning Ordinance of the City of Texarkana, Texas, Ordinance No. 127-70, passed and approved on September 14, 1970, be further amended so as to grant a **Specific Use Permit numbered S-653 for the purpose of locating a CEVMS billboard** on the following described property, to-wit: **part of Tract 18, George Brinlee HRS, A-18, located at 2506 Richmond Road (Exhibit "A") in the City of Texarkana, Bowie County, Texas.**

SECTION 2: That the following special terms and conditions are hereby imposed and made a part of this Ordinance:

1. There will be only one billboard allowed on the property at this location (see attached legal and exhibit). The CEVMS billboard will be a 2 sided digital billboard.
2. The CEVMS billboard will be 14' x 48' in size or 672 square feet in size.

Attachment: Ordinance No. 2014-052 (1091 : Ord. 2014-052 - SUP for billboard at 2506 Richmond Road)

3. All State of Texas requirements for this location must be followed except when local requirements are more restrictive. Therefore, the CEVMS billboard will have an overall height not to exceed **35 feet** per the building, structure and sign height requirement in Section 10-101 of the City Zoning Ordinance.
4. Any distance requirements from existing utility lines from any utility company.

SECTION 3: All ordinances or parts of ordinances in conflict herewith are specifically repealed to the extent of such conflict.

SECTION 4: It is further provided that in case a section, clause, sentence or part of this Ordinance shall be deemed or adjudged by a court of competent jurisdiction to be invalid, then such invalidity shall not affect, impair, or invalidate the remainder of this Ordinance.

SECTION 5: That this Ordinance shall be in full force and effect from and after its passage and approval.

PASSED AND APPROVED in Regular Council Session on this the 9th day of June, 2014.

ATTEST:

JENNIFER EVANS, CITY SECRETARY	BOB BRUGGEMAN, MAYOR

Attachment: Ordinance No. 2014-052 (1091 : Ord. 2014-052 - SUP for billboard at 2506 Richmond Road)

City of Texarkana, Texas

Developing Perspectives and Goals Pending Approval by the City Council:

Perspectives	Goals
Serve the Community	☐ Promote an Environmentally Sensitive & Livable Community ☐ Provide a Safe Community ☐ Deliver Quality Services ☐ Foster a Healthy Community
Run the Operations	☐ Enhance Community Preparedness & Responsiveness ☐ Maximize Partnership Opportunities ☐ Provide Courteous & Responsive Customer Service ☑ Model a Positive City Image ☐ Deliver Efficient Services ☑ Cultivate Community Involvement & Access
Manage the Resources	☐ Maintain Fiscal Strength ☐ Maximize Utilization & Resources ☐ Invest in Infrastructure & Transportation
Develop Personnel	☐ Develop a Skilled & Diverse Workforce ☐ Create a Positive & Rewarding Work Culture

Perspectives and Goals Additional Comments:

None

Resource Impact:

Staff time required if item is approved:	Select One By Clicking Here

Other Potential Impacts:

None

Public Information Plan:

☑	Newspaper Notice (Required by Statute)	☑	Public Hearing (Required by Statute)
☐	Public Forum/Input Session	☐	Press Release
☐	E-News Distribution	☑	Website Notice
☐	Social Media (Twitter, Facebook, etc.)	☑	Special Mailing
☐	Flyers Posted	☐	Banners Posted
☐	Survey	☐	Automated Phone Call
☐	None Required	☑	Sign posted

Other:

Attachment: Goals and Perspectives (1091 : Ord. 2014-052 - SUP for billboard at 2506 Richmond Road)

ESHIBIT "A"

All that certain tract or parcel of land being a part of the GEORGE BRINLEE HEADRIGHT SURVEY, A-18, Bowie County, Texas; said tract of land being a part of a certain 0.373 acre tract conveyed to Liepman Restaurants, Inc., by Special Warranty Deed recorded in Volume 2596, Page 244 of the Real Property Records of Bowie County, Texas; and being more particularly described by metes and bounds as follows:

BEGINNING at the Northeast corner of a certain 0.373 acre tract conveyed to Liepman Restaurants, Inc., by Special Warranty Deed recorded in Volume 2596, Page 244 of the Real Property Records of Bowie County, Texas;

THENCE – S. 40° 57' 00" E., 40.00 ft. with the East boundary line of the above mentioned 0.373 acre tract;

THENCE – S. 49° 03' 00" W., 50.00 ft. parallel with the North boundary line of the above mentioned 0.373 acre tract;

THENCE – N. 40° 57' 00" W., 40.00 ft. parallel with the above mentioned East boundary line of 0.373 acre tract to the above mentioned North boundary line of 0.373 acre tract;

THENCE – N. 49° 03' 00" E., 50.00 ft. with the above mentioned North boundary line of 0.373 acre tract to the POINT OF BEGINNING; basis of bearings is call bearing of South boundary line of said 0.373 acre tract. The above described property being surveyed by Richard V. Hall, Jr. contains 0.046 acres of land, more or less.

Attachment: Exhibit "A" attachment to Ord. # 2014-052 (legal description) (1091 : Ord. 2014-052 - SUP for billboard at 2506 Richmond Road)

Chad
Shipp

EXHIBIT "B"

NEW PROPOSED DOUBLE-SIDED DIGITAL BILLBOARD LOCATION BY

SIDE 2 - VIEW FROM DOLLAR GENERAL PARKING LOT

Attachment: Exhibit "B" attachment to Ord. # 2014-052 (rendering) (1091 : Ord. 2014-052 - SUP for billboard at 2506 Richmond Road)

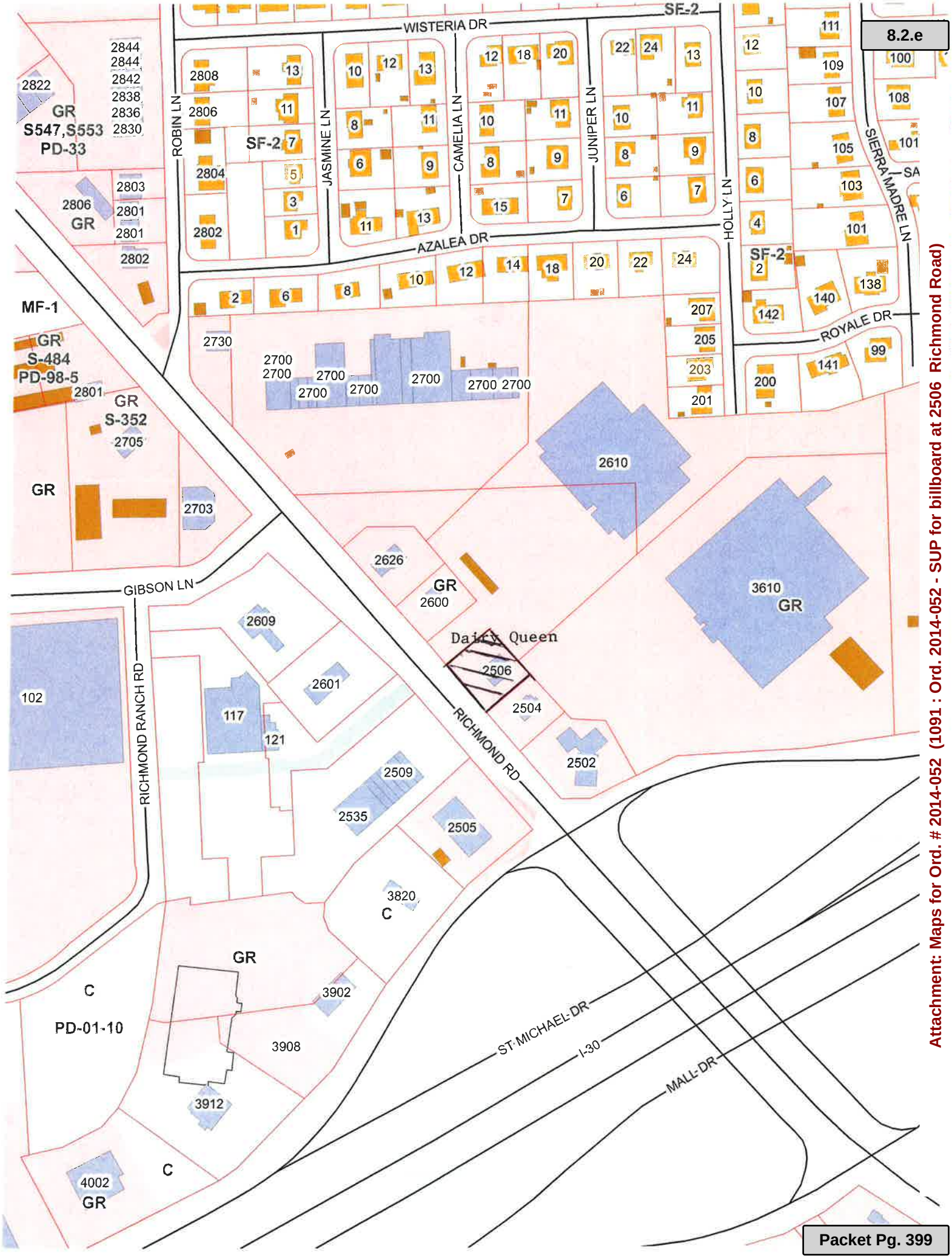

Attachment: Maps for Ord. # 2014-052 (1091 : Ord. 2014-052 - SUP for billboard at 2506 Richmond Road)

Attachment: Maps for Ord. # 2014-052 (1091 : Ord. 2014-052 - SUP for billboard at 2506 Richmond Road)

Attachment: Maps for Ord. # 2014-052 (1091 : Ord. 2014-052 - SUP for billboard at 2506 Richmond Road)

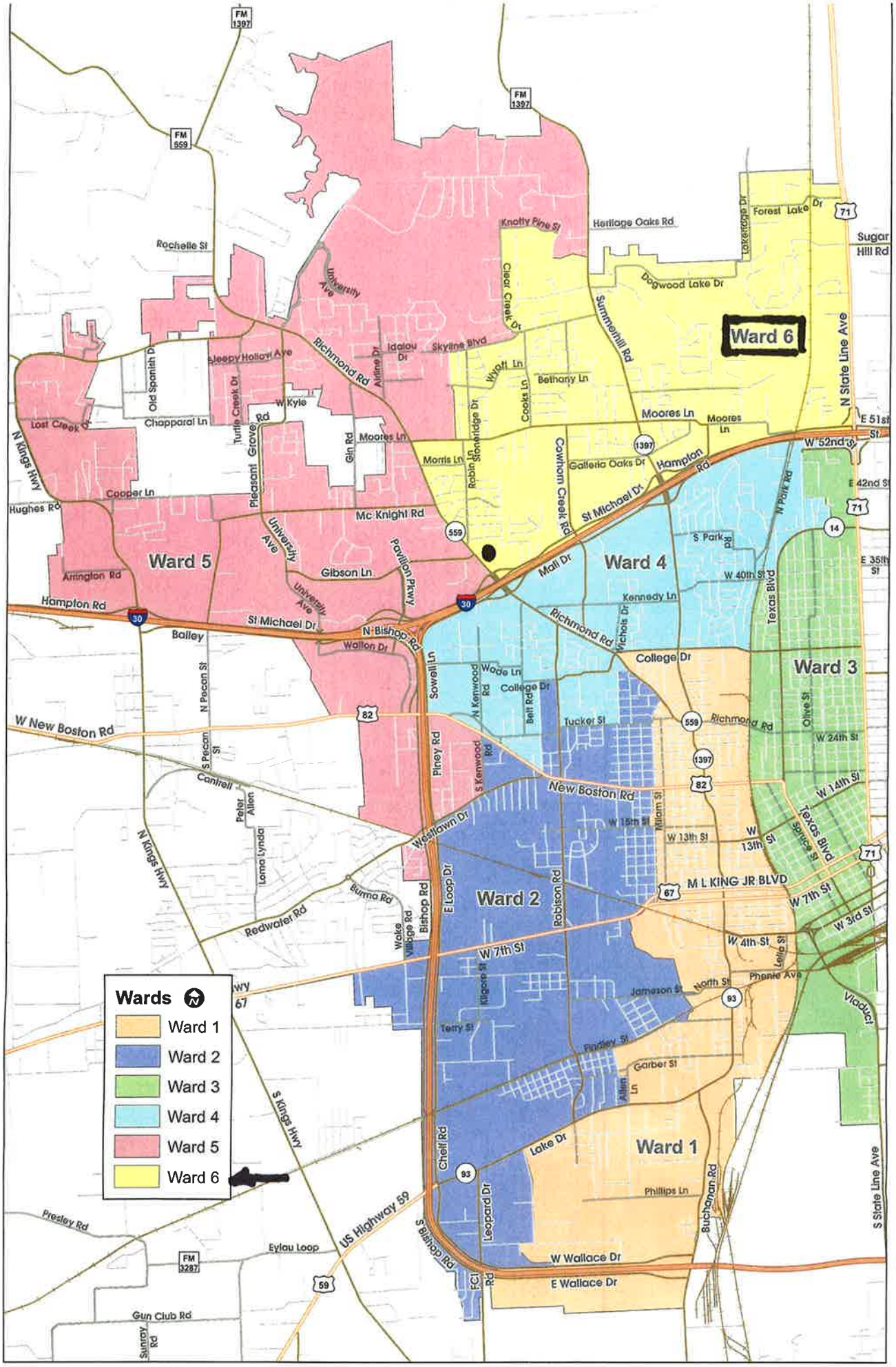

Attachment: Ward map for Ord. # 2014-052 (1091 : Ord. 2014-052 - SUP for billboard at 2506 Richmond Road)

Attachment: Richmond Road Shipp Media Presentation for Signage (1091 : Ord. 2014-052 - SUP for

Attachment: Richmond Road Shipp Media Presentation for Signage (1091 : Ord. 2014-052 - SUP for

"When the facts change, I change my mind."

John Maynard Keynes
British Economist

In the past decade the facts
of the outdoor advertising industry
have changed.

Attachment: Richmond Road Shipp Media Presentation for Signage (1091 : Ord. 2014-052 - SUP for

The facts were - billboards are old, outdated, unattractive.

Attachment: Richmond Road Shipp Media Presentation for Signage (1091 : Ord. 2014-052 - SUP for

The facts now are - outdoor advertising structures can be stunning, high-tech, digital outdoor messaging centers.

Attachment: Richmond Road Shipp Media Presentation for Signage (1091 : Ord. 2014-052 - SUP for

There is no comparison between these two signs in appearance or capability.

Attachment: Richmond Road Shipp Media Presentation for Signage (1091 : Ord. 2014-052 - SUP for

They're not just signs, but signs of progress.

Attachment: Richmond Road Shipp Media Presentation for Signage (1091 : Ord. 2014-052 - SUP for

Shipp Outdoor is changing the facts of the local outdoor advertising industry by creating visually appealing structures with high-tech communications capabilities that benefit the city, local businesses and non-profits.

Attachment: Richmond Road Shipp Media Presentation for Signage (1091 : Ord. 2014-052 - SUP for

I30 Nash, TX

Attachment: Richmond Road Shipp Media Presentation for Signage (1091 : Ord. 2014-052 - SUP for

I30 next to El Chico's

Attachment: Richmond Road Shipp Media Presentation for Signage (1091 : Ord. 2014-052 - SUP for

Hwy 549 (Loop 245) near Cooper Tire

What you've just seen is the creation
of Texarkana's only outdoor digital network.

Instead of advertising in one location, advertiser ads rotate from one location to the next every two weeks allowing them to reach a much greater audience at a very low rate with no vinyl to print and install.

In addition to the visual appeal of our signs, there are many compelling reasons for the city to

"CHANGE ITS MIND"

about outdoor advertising in the main retail corridor of Richmond Road.

How does digital outdoor benefit the city?

Attachment: Richmond Road Shipp Media Presentation for Signage (1091 : Ord. 2014-052 - SUP for

In times of extraordinary negativity, Shipp Outdoor promotes a positive image of Texarkana - free of charge.

We believe this works to change hearts and minds and give people a positive view of the place they call home and offers visitors an excellent first impression.

Attachment: Richmond Road Shipp Media Presentation for Signage (1091 : Ord. 2014-052 - SUP for

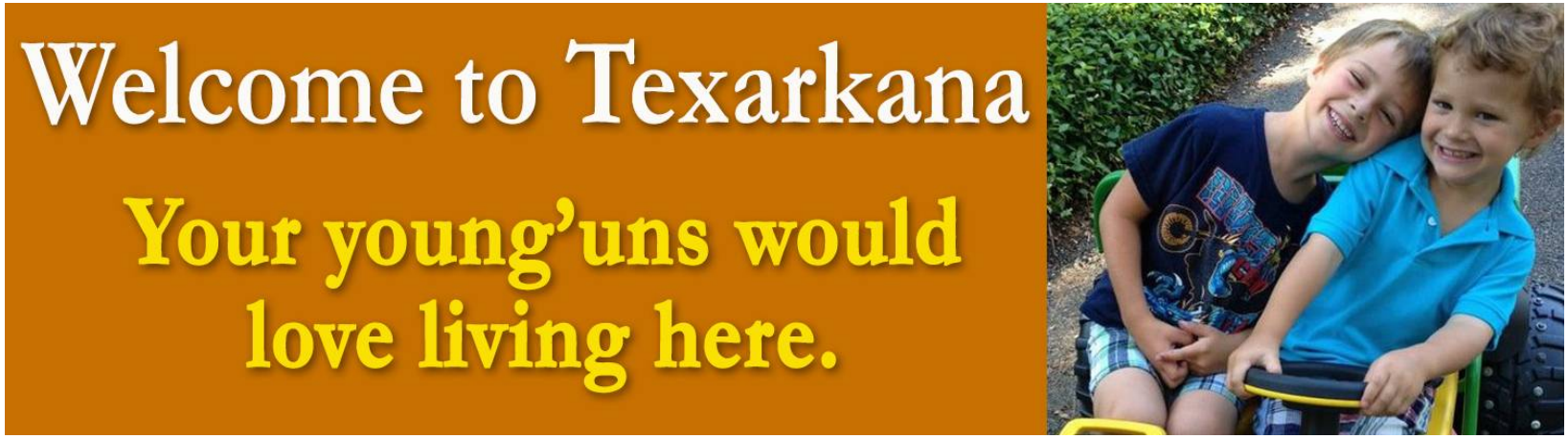

Attachment: Richmond Road Shipp Media Presentation for Signage (1091 : Ord. 2014-052 - SUP for

Attachment: Richmond Road Shipp Media Presentation for Signage (1091 : Ord. 2014-052 - SUP for

Attachment: Richmond Road Shipp Media Presentation for Signage (1091 : Ord. 2014-052 - SUP for

Attachment: Richmond Road Shipp Media Presentation for Signage (1091 : Ord. 2014-052 - SUP for

ROADS • RAIL • WATER • LABOR
TEXARKANA
DO BUSINESS HERE.

We brag on our hometown success stories

Attachment: Richmond Road Shipp Media Presentation for Signage (1091 : Ord. 2014-052 - SUP for

And have a little fun, too

Attachment: Richmond Road Shipp Media Presentation for Signage (1091 : Ord. 2014-052 - SUP for

And offer motorists a little holiday cheer.

Attachment: Richmond Road Shipp Media Presentation for Signage (1091 : Ord. 2014-052 - SUP for

Attachment: Richmond Road Shipp Media Presentation for Signage (1091 : Ord. 2014-052 - SUP for

Attachment: Richmond Road Shipp Media Presentation for Signage (1091 : Ord. 2014-052 - SUP for

We display heart-warming moments

Attachment: Richmond Road Shipp Media Presentation for Signage (1091 : Ord. 2014-052 - SUP for

And give young men a real shot at landing a date…

Attachment: Richmond Road Shipp Media Presentation for Signage (1091 : Ord. 2014-052 - SUP for

We remember local people.

Attachment: Richmond Road Shipp Media Presentation for Signage (1091 : Ord. 2014-052 - SUP for

And national tragedies.

Attachment: Richmond Road Shipp Media Presentation for Signage (1091 : Ord. 2014-052 - SUP for

We work to save the backbone of our economy while creating a new high-tech industry.

Attachment: Richmond Road Shipp Media Presentation for Signage (1091 : Ord. 2014-052 - SUP for

Major employers now have a new place to recruit qualified employees.

Attachment: Richmond Road Shipp Media Presentation for Signage (1091 : Ord. 2014-052 - SUP for

Non-Profits benefit with FREE ads or significant discounts.

Attachment: Richmond Road Shipp Media Presentation for Signage (1091 : Ord. 2014-052 - SUP for

Attachment: Richmond Road Shipp Media Presentation for Signage (1091 : Ord. 2014-052 - SUP for

Attachment: Richmond Road Shipp Media Presentation for Signage (1091 : Ord. 2014-052 - SUP for

523,907

Free or drastically reduced spots for non-profits
or messages for city branding.

Local schools are benefitting

Attachment: Richmond Road Shipp Media Presentation for Signage (1091 : Ord. 2014-052 - SUP for

Warnings can be issued.

Attachment: Richmond Road Shipp Media Presentation for Signage (1091 : Ord. 2014-052 - SUP for

And criminals are learning that crime just doesn’t pay.

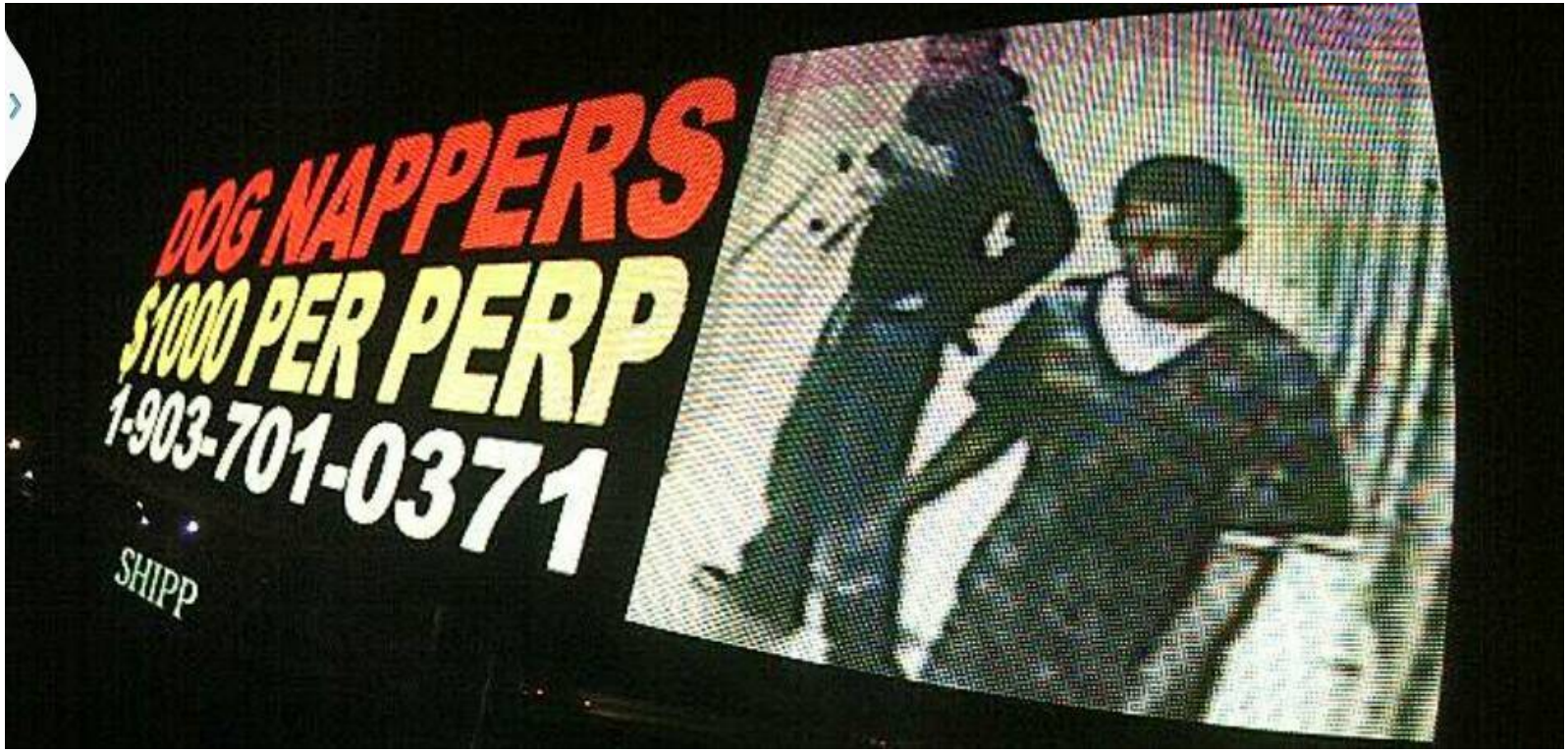

Attachment: Richmond Road Shipp Media Presentation for Signage (1091 : Ord. 2014-052 - SUP for

Local businesses stand with us.

Attachment: Richmond Road Shipp Media Presentation for Signage (1091 : Ord. 2014-052 - SUP for

Attachment: Richmond Road Shipp Media Presentation for Signage (1091 : Ord. 2014-052 - SUP for

Attachment: Richmond Road Shipp Media Presentation for Signage (1091 : Ord. 2014-052 - SUP for

TOWARD ZERO DEATHS
One is too many.
TZDarkansas.org

Attachment: Richmond Road Shipp Media Presentation for Signage (1091 : Ord. 2014-052 - SUP for

Attachment: Richmond Road Shipp Media Presentation for Signage (1091 : Ord. 2014-052 - SUP for

Attachment: Richmond Road Shipp Media Presentation for Signage (1091 : Ord. 2014-052 - SUP for

Turn Left Before McDonald's

Attachment: Richmond Road Shipp Media Presentation for Signage (1091 : Ord. 2014-052 - SUP for

Attachment: Richmond Road Shipp Media Presentation for Signage (1091 : Ord. 2014-052 - SUP for

Shipp Outdoor wants to bring Texarkana it's newest digital communications center located in the heart of the city to better communicate with local citizens and the thousands of people who enter and exit out of our city daily.

And we want it to look amazing!

Let competition do what “cap and replace” could not do – make outdated billboards obsolete.

Attachment: Richmond Road Shipp Media Presentation for Signage (1091 : Ord. 2014-052 - SUP for

New communication tool

NEW PROPOSED DOUBLE-SIDED DIGITAL BILLBOARD LOCATION BY SHIPP OUTDOOR

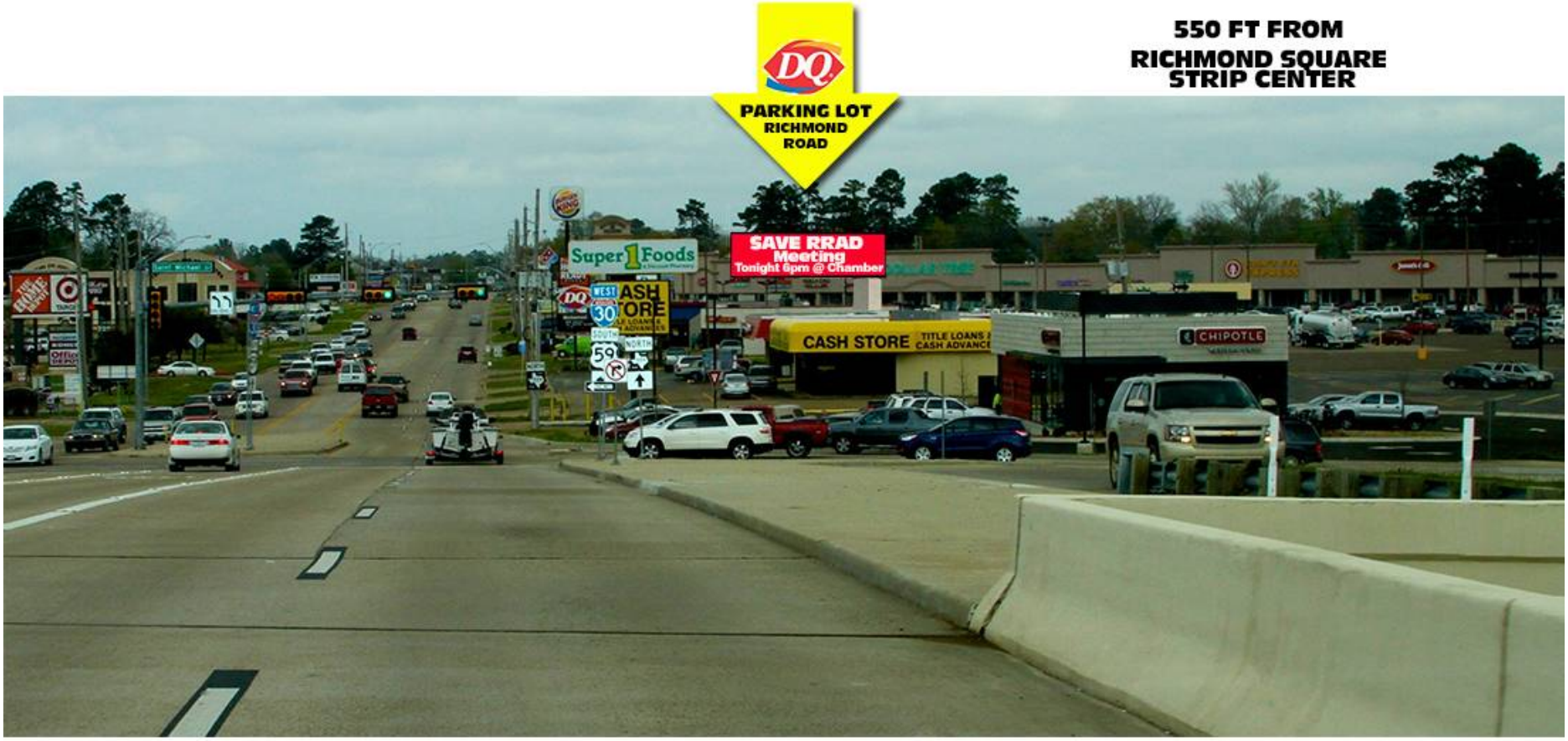

SIDE 1 - VIEW FROM RICHMOND ROAD I30 OVERPASS

Attachment: Richmond Road Shipp Media Presentation for Signage (1091 : Ord. 2014-052 - SUP for

NEW PROPOSED DOUBLE-SIDED DIGITAL BILLBOARD LOCATION BY SHIPP OUTDOOR

SIDE 2 - VIEW FROM DOLLAR GENERAL PARKING LOT

POLE >
A
AIRY QUEEN
STORE
559

Voting “yes” is a vote in favor of:

-The City of Texarkana, TX
-Non-Profits
-Businesses
-Progress

Out with the old, in with the new.

Attachment: Richmond Road Shipp Media Presentation for Signage (1091 : Ord. 2014-052 - SUP for

“When the facts change, I change my mind.”

Digital Sign by Shipp on Richmond Road

Visibility Triangles

Attachment: Shipp Digital Sign at DQ on Richmond (1091 : Ord. 2014-052 - SUP for

Attachment: Shipp Digital Sign at DQ on Richmond (1091 : Ord. 2014-052 - SUP for

Visibility Triangles with Richmond Road Orientation

Attachment: Shipp Digital Sign at DQ on Richmond (1091 : Ord. 2014-052 - SUP for

West bound on Saint Michael Drive the sign location becomes visible as the vehicle passes the Good Will location and remains visible about 8 seconds before reaching Richmond Road.

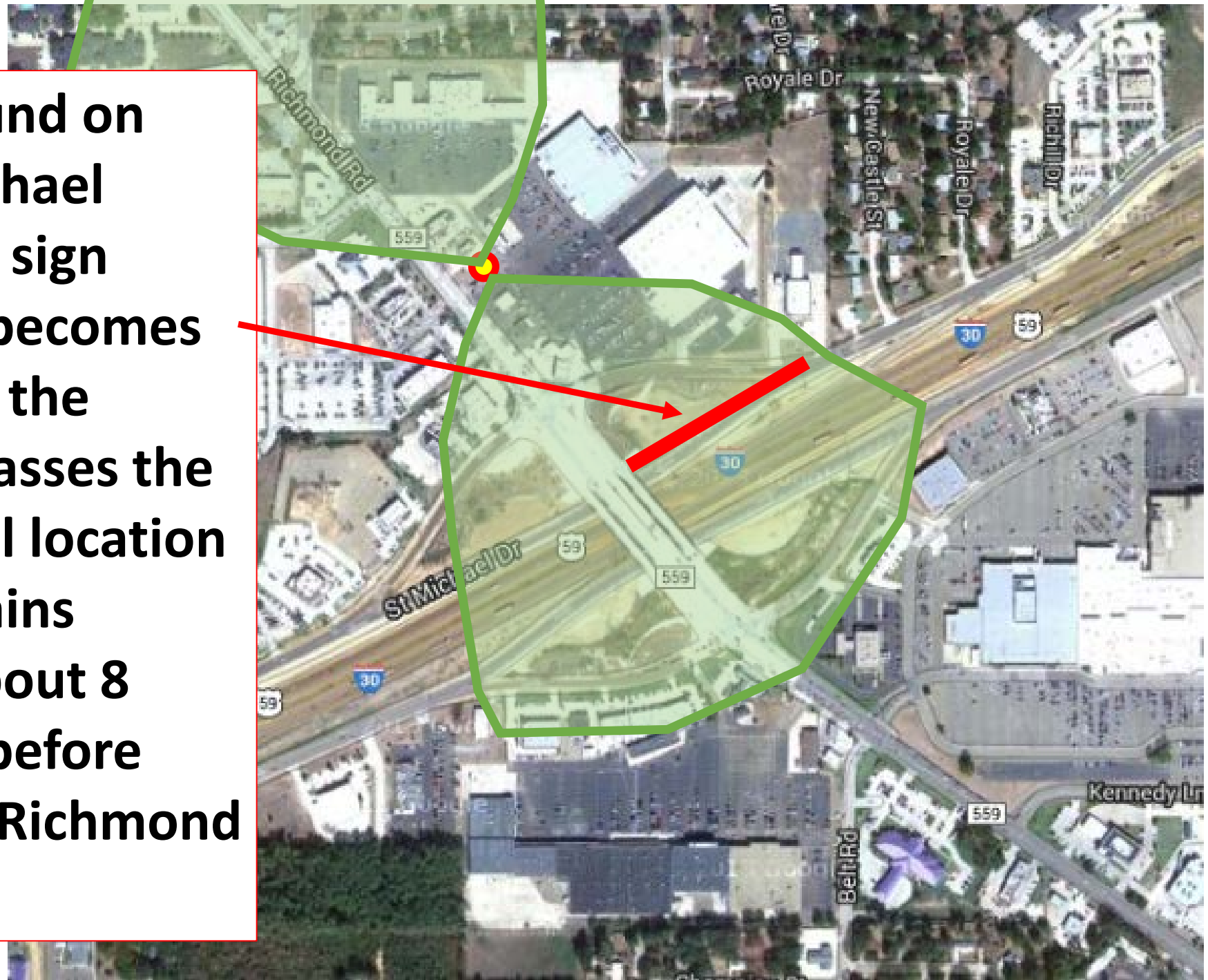

Attachment: Shipp Digital Sign at DQ on Richmond (1091 : Ord. 2014-052 - SUP for

West bound on IH-30 the sign location becomes visible as the vehicle passes the Good Will location and remains visible about 8 seconds before reaching Richmond Road.

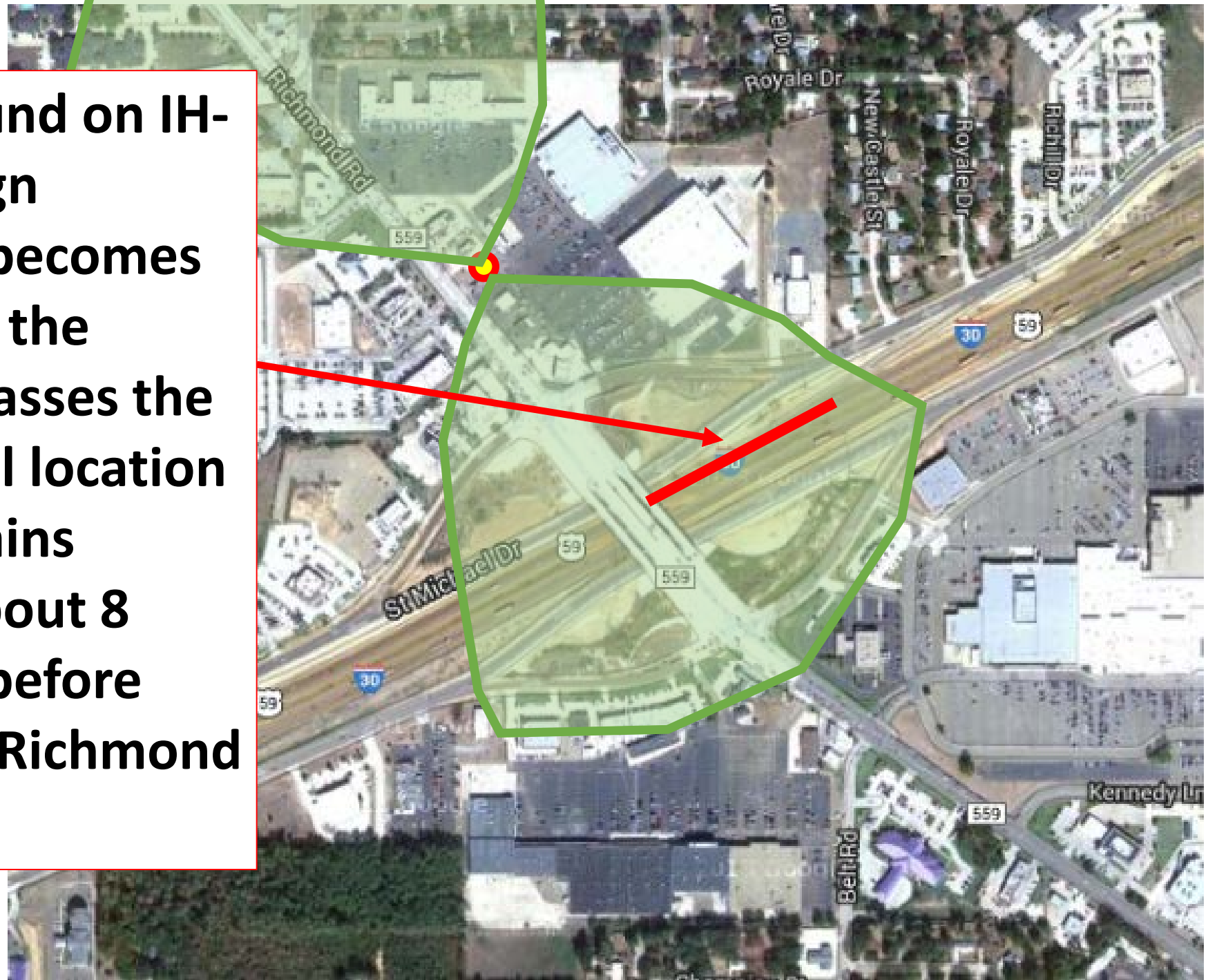

Attachment: Shipp Digital Sign at DQ on Richmond (1091 : Ord. 2014-052 - SUP for

East bound on Mall Drive the sign location becomes visible as the vehicle passes the Billy Sims BBQ location and remains visible about 8 seconds before reaching Richmond Road.

Attachment: Shipp Digital Sign at DQ on Richmond (1091 : Ord. 2014-052 - SUP for

East bound on IH-30 the sign location becomes visible as the vehicle passes the Billy Sims BBQ location and remains visible about 8 seconds before reaching Richmond Road.

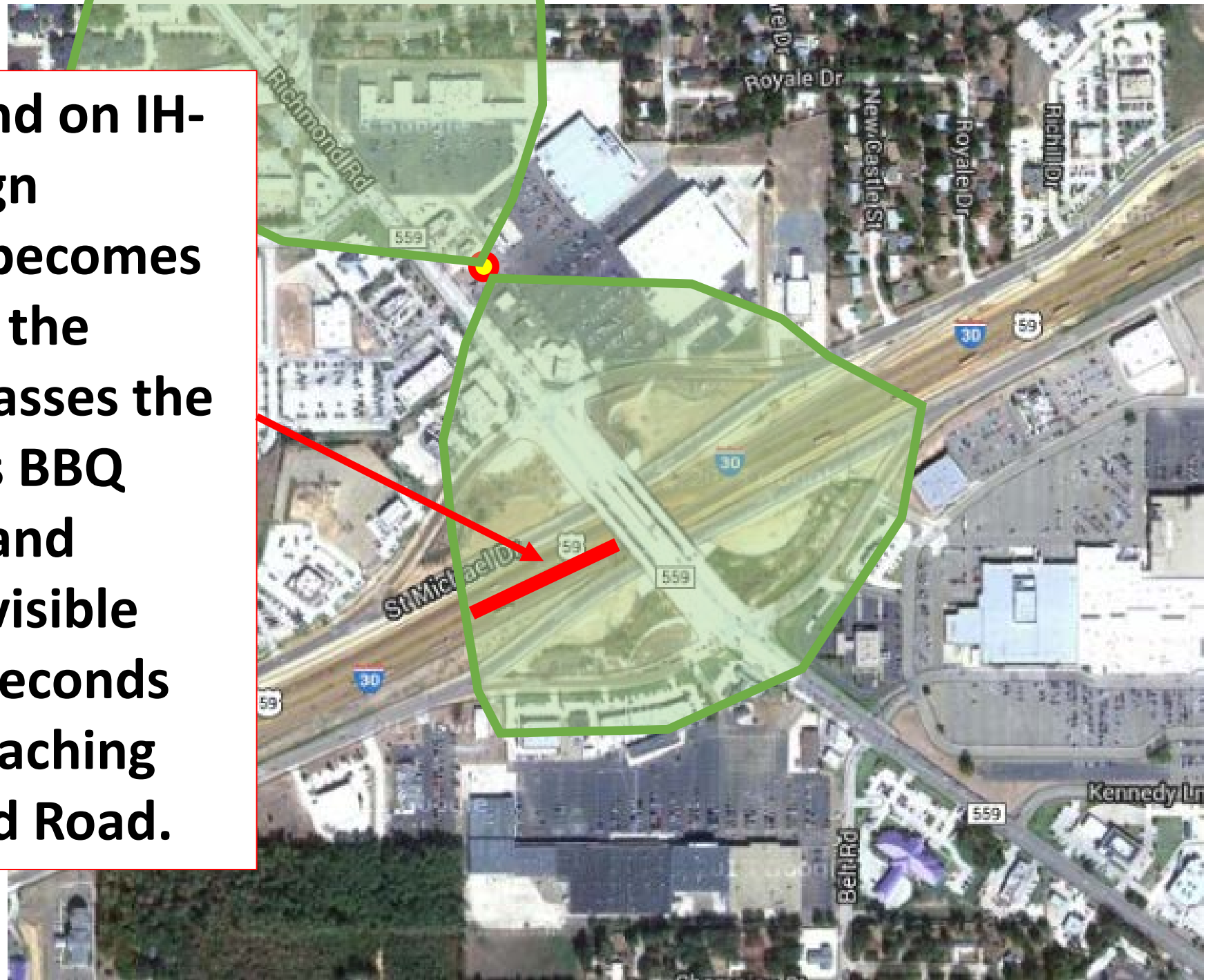

Attachment: Shipp Digital Sign at DQ on Richmond (1091 : Ord. 2014-052 - SUP for

North and South bound Richmond Road traffic will have visibility of the sign, especially based on the orientation of the sign to the roads and streets in the visibility triangles.

Attachment: Shipp Digital Sign at DQ on Richmond (1091 : Ord. 2014-052 - SUP for

Purpose of the Proposed Sign

- The sign orientation supports motorists traveling on Richmond Road
  - A local collector road
  - Congested with traffic and existing signs
- Motorists on IH-30 and the frontage roads will have limited visibility of the proposed sign:
  - Due to location off the roadway
  - Orientation of the sign to the Interstate and Frontage Road

Attachment: Shipp Digital Sign at DQ on Richmond (1091 : Ord. 2014-052 - SUP for

Ordinance No. 2014-052

Shipp Outdoor, LLC

Letters of Support

Attachment: Shipp Outdoor - Ltrs of Supt (Ord. 2014-052) (1091 : Ord. 2014-052 - SUP for billboard at 2506 Richmond Road)

JOE R. CREWS

Architecture - Interiors - Planning

28 Morris Lane Texarkana, Texas 75503
Tel. 903.255.1710 Fax 903.223.7100
joe@joecrews.com
www.joecrews.com

28 April 2014

To whom it may concern,

Shipp Outdoor has retained my services as an architect to assist in the design of an aesthetically appealing monument style brick or rock housing for the pole that will support a double-sided digital LED outdoor advertising sign on Richmond Road.

Both I and Shipp Outdoor feel this new structure will be a very attractive addition to Texarkana and built to the highest standards of quality. As local architect, I am proud to be a part of such a project and believe members of the city council and local citizens will be amazed and impressed by the final product built by this innovative company.

Sincerely,

Joe Crews
Architect

Attachment: Shipp Outdoor - Ltrs of Supt (Ord. 2014-052) (1091 : Ord. 2014-052 - SUP for billboard at 2506 Richmond Road)

Ta Molly's
MEXICAN KITCHEN

TaMolly's is very satisfied with the digital billboard exposure in Texarkana and are currently rotating on three digital bill boards. A digital billboard on Richmond Road would greatly benefit us as to direct traffic to our restaurant especially with the new road structure.

Debbie Powers

Attachment: Shipp Outdoor - Ltrs of Supt (Ord. 2014-052) (1091 : Ord. 2014-052 - SUP for billboard at 2506 Richmond Road)

5602 Richmond Road
Texarkana, TX 75503

City Council:

I am very much in support of Shipp Outdoor and their proposed location on Richmond Road. As a business owner located very far down Richmond Road in front of Minton's Sportsplex, it is vital to our store to have an opportunity to serve as many customers as possible and I believe the traffic we might be able to generate from I30 could make all the difference. I have been looking for effective marketing campaigns to help me get more traffic, I have no doubt this is my answer.

The type of technology that Shipp Outdoor brings to our city is first class and will help our city and businesses grow and prosper.

Sincerely,

Phillip Peek
Owner

Dear Council Members,

As a business located on Richmond Road but not at the immediate exit, I am very much in favor of Shipp Outdoor having a new digital sign that can help my store capture more business. The majority of people passing through through town and stopping to eat don't make it past the immediate area of the exit.

I believe pushing traffic to the backside of Richmond Road will help all restaurants and retail beyond the exit area. The farther back people travel, the more likely they are to shop or eat at more than one business and that turns into additional sales tax for Texarkana. I think this is a big win for our city.

Mike Cox
Owner
Wendy's

4/28/2014

TEXANA BANK

April 28, 2014

City Council
City Hall
Texarkana, TX

RE: Digital Billboard on Richmond Road

To whom it may concern:

Please accept this letter on behalf of Texana Bank and Shipp Outdoor. We are in support of the Shipp Outdoor proposal to place an electric sign on Richmond Road. We feel that it will be beneficial to businesses in the area and this type advertising will help direct customers north, where a number of new businesses have located.

Shipp Outdoor has invested its time and money with other billboards in the area and has a first class product. I would expect nothing but the same with this location. We are currently advertisers with Shipp Outdoor and we are very pleased with the product.

Thanks for allowing us to voice our support in this matter. Please feel free to contact me directly if any other information is needed.

Sincerely,

David White
Texarkana Market President
Texana Bank

ROADS • RAIL • WATER • LABOR
TEXARKANA
DO BUSINESS HERE.

Digital Billboard Facts

Legality

Scenic America believes digital billboards on federal aid roads violate the letter and spirit of the Highway Beautification Act, and has filed a lawsuit challenging a 2007 Federal Highway Administration ruling that deemed them permissible. For more information visit www.scenic.org/lawsuit.

Digital Billboard Prohibitions

In addition to Maine, Vermont, Alaska, Hawaii (which prohibit all billboards), the state of Montana and a growing number of cities prohibit them, including Houston, Denver, St. Louis and Kansas City. Grassroots citizen groups have worked to pass ballot initiatives prohibiting them in cities including San Francisco and Rapid City.

Traffic Safety

A growing body of evidence demonstrates that digital billboards pose a threat to traffic safety. A study by the Swedish government found that digital billboards took drivers' eyes off the road for significant periods of time and they subsequently ordered the removal of digital signs. Other studies from Denmark, Canada and Australia show similar concerns about digital billboard's impact on traffic safety. For more information visit www.scenic.org/safety.

Energy Usage

A 2010 study by urban planner Gregory Young found that in a 24-hour period a digital billboard uses the same amount of energy as 15 average U.S. homes. For more information visit www.scenic.org/energy.

Attachment: Digital Billboard Facts (1091 : Ord. 2014-052 - SUP for billboard at 2506 Richmond Road)

Scenic Dallas

Scenic Dallas was established in 1999 as a chapter of Scenic Texas, a 501(c)(3) non-profit organization dedicated to fighting visual pollution, and to preserving and enhancing our city's visual environment.

PRESERVING AND ENHANCING OUR STATE'S VISUAL ENVIRONMENT

Recent News

- Scenic America files lawsuit seeking to overturn FHWA ruling on digital billboards
- Replacing Houston's Tree Canopy
- Billboard industry tries to discredit safety report
- Bridge to Connect Herman Park with Brays Bayou Pathway
- Scenic Houston Board Member Promotes Recreational Trails
- Billboard Companies in Dallas Sue TxDot
- Green Ribbon Planting Along I-35 in San Marcos
- Activists in Kyle, Texas protest the removal of a large number of trees
- Cognitive Benefits of City Parks
- Marble Falls Says No to Electronic Billboards

Archives

- February 2013
- January 2013
- November 2012
- October 2012
- September 2012
- August 2012
- July 2012
- May 2012
- April 2012
- March 2012
- February 2012
- January 2012
- December 2011
- November 2011
- October 2011
- September 2011
- August 2011
- July 2011
- May 2011
- March 2011

SCENIC DALLAS

MISSION

Our mission is to limit actions which have a harmful visual impact on our city and support public policies which promote scenic conservation and beautification, and provide education concerning the impact of visual pollution on our quality of life.

Scenic Dallas provides an educational tool and a voice for citizens of Dallas.

ACCOMPLISHMENTS

- **New Billboard Ban** enacted in 2000 by the Dallas City Council
- **Ongoing Enforcement** including the removal of billboards on SH190 (President George Bush Turnpike)
- **Green Ribbon Project Funds** totaling more than $1.8 million were allocated by the Texas Legislature to benefit Dallas for 2001-2003, and re-appropriated for that same amount for another two years for 2003-2005

GET INVOLVED

With your support, Scenic Dallas voices the concerns of Dallas citizens and those in its neighboring cities.

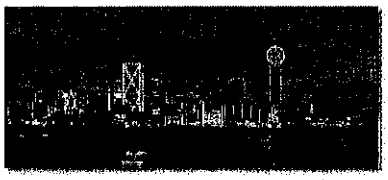

Attachment: Dallas Billboard ordinance (1091 : Ord. 2014-052 - SUP for billboard at 2506 Richmond Road)

ORDINANCE NO. 2014-052

Ordinance No. 2014-052 granting a Specific Use Permit to allow the location of a CEVMS (digital) billboard on a part of Tract 18, George Brinlee HRS, A-18, located at 2506 Richmond Road. Mark Liepman, owner. Chad Shipp, Shipp Outdoor, LLC, agent. (a 3/4 vote will be required by City Council to approve this item due to Planning and Zoning Commission denial).

DIGITAL BILLBOARD STUDY REPORT

Safety Impacts of the Emerging Digital Display Technology for Outdoor Advertising Signs

http://www.azmag.gov/Documents/pdf/cms.resource/NCHRP_Digital_Billboard_Report70216.pdf

Attachment: Ord. No. 2014-052 Digital Billboard Study Report Link [Revision 1] (1091 : Ord. 2014-052 - SUP for billboard at 2506 Richmond

Digital Sign by Shipp on Richmond Road

Attachment: Shipp Digital Sign at DQ on Richmond Updated 20140521 (1091 : Ord. 2014-

Fields of Visibility

Sign Orientation as was presented to Planning and Zoning Commission

Attachment: Shipp Digital Sign at DQ on Richmond Updated 20140521 (1091 : Ord. 2014-

Visibility Triangles with Richmond Road Orientation

Attachment: Shipp Digital Sign at DQ on Richmond Updated 20140521 (1091 : Ord. 2014-

Rule 21.143 – Permit Required

- **Except as provided by this chapter** [21], unless a person holds a permit issued under 21.164 of this division [Signs] (relating to Decision on Application) or 21.200 of this division (relating to local control), **the person may not erect or maintain an outdoor sign that is:**
- (1) **within 660 feet of the nearest edge of the right of way of a regulated highway** **if any part of the sign's advertising or information content is visible from any place on the main-traveled way of the highway**, or
- (2) outside of the jurisdiction of an incorporated city and more than 660 feet from the nearest edge of right of way of a regulated highway if any part of the sign's advertising or information content is visible for the main-traveled way of the highway and the sign was erected for the purpose of having its advertising or information content seen from the main-traveled way of the highway.

Attachment: Shipp Digital Sign at DQ on Richmond Updated 20140521 (1091 : Ord. 2014-

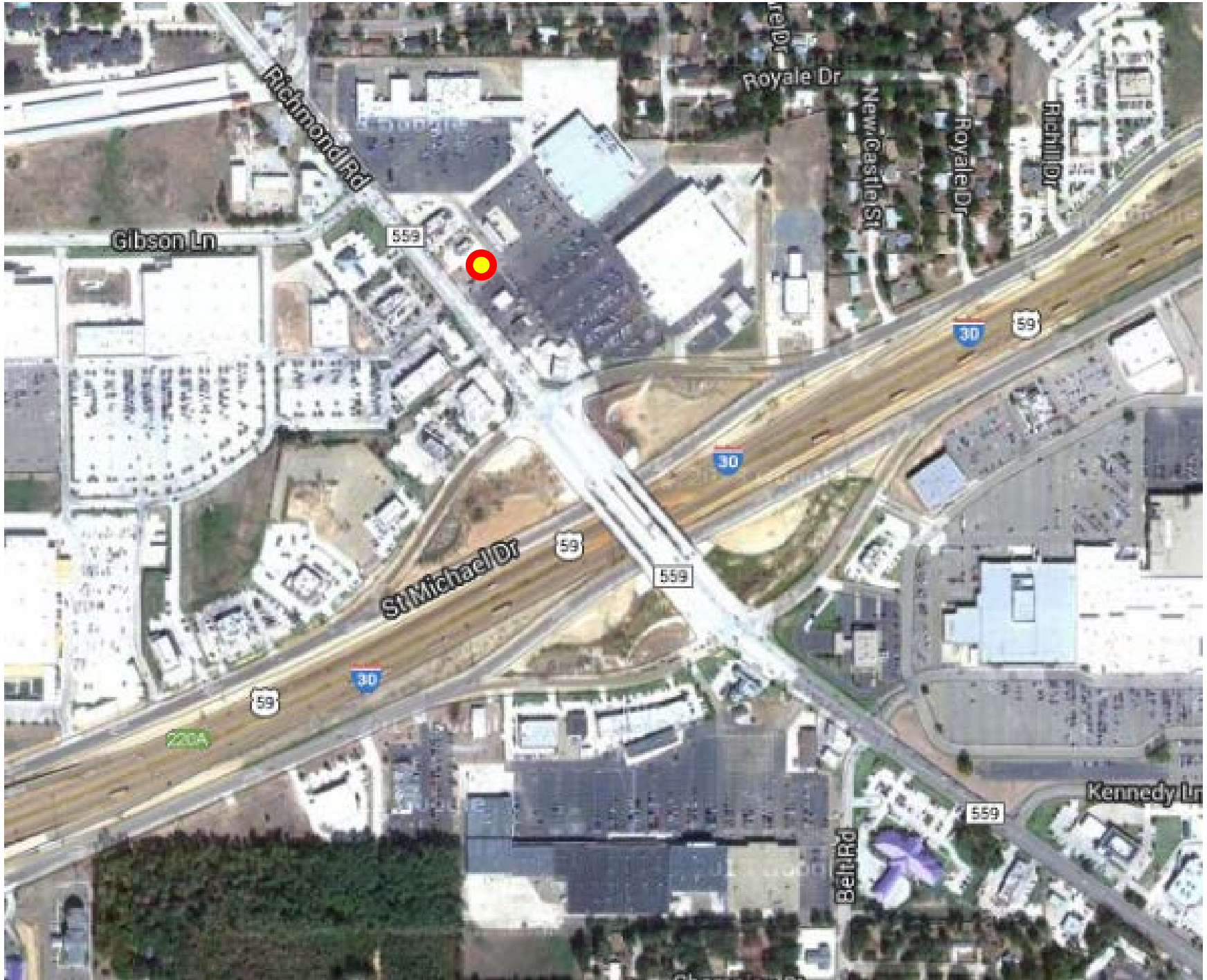

Attachment: Shipp Digital Sign at DQ on Richmond Updated 20140521 (1091 : Ord. 2014-

Attachment: Shipp Digital Sign at DQ on Richmond Updated 20140521 (1091 : Ord. 2014-

West bound on Saint Michael Drive and I-30 the sign location becomes visible as the vehicle passes the Good Will location and remains visible about 8 seconds before reaching Richmond Road.

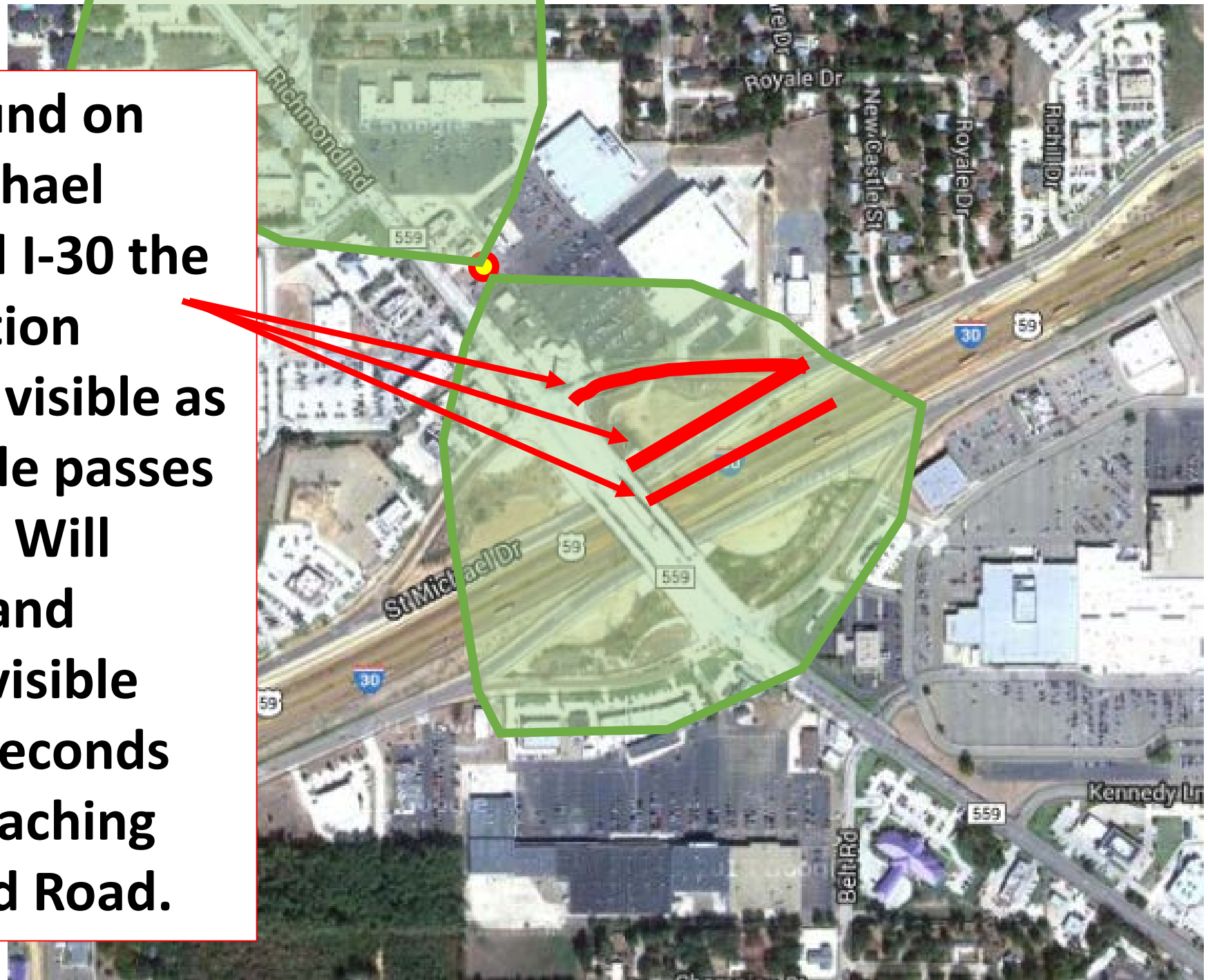

Attachment: Shipp Digital Sign at DQ on Richmond Updated 20140521 (1091 : Ord. 2014-

East bound on Mall Drive and I-30 the sign location becomes visible as the vehicle passes the Billy Sims BBQ location and remains visible about 8 seconds before reaching Richmond Road.

Attachment: Shipp Digital Sign at DQ on Richmond Updated 20140521 (1091 : Ord. 2014-

What about all those other signs?

Attachment: Shipp Digital Sign at DQ on Richmond Updated 20140521 (1091 : Ord. 2014-

What about all those other signs?

- The other signs in the area are exempt from the rule because they are on-premise signs versus being an off-premise sign (billboard)

Attachment: Shipp Digital Sign at DQ on Richmond Updated 20140521 (1091 : Ord. 2014-

Rule 21.146 – Exempt Signs

- (a) The **following signs are exempt** from this division [Signs]
  - (1) **an on-premise sign that meets the criteria provided in 21.147 of this division (relating to on-premise sign) except as provided by subsection (c) of this section**;
  - (2) a sign that has the purpose of protecting life or property;
  - (3) a sign that provides information about underground utility lines;
  - (4) an official sign that is erected by a public officer, public agency, or political subdivision under the officer's, agency's, or political subdivision's constitutional or statutory authority;
  - (5) a sign required by the Railroad Commission of Texas at the principal entrance to or on each oil or gas producing property, well, tank, or measuring facility to identify or to locate the property if the sign is no larger than necessary to comply with the Railroad Commission regulations;

Attachment: Shipp Digital Sign at DQ on Richmond Updated 20140521 (1091 : Ord. 2014-

Rule 21.146 – Exempt Signs (cont)

- (6) a sign of a nonprofit service club, charitable association, religious organization, chamber of commerce, nonprofit museum, or governmental entity, other than an entity to which paragraph (8) of this subsection applies, that gives information about the meetings, services, events, or locations of the entity and that does not exceed an area of 32 square feet;
- (7) a public service sign that:
  - (A) is located on a school bus stop seating bench or shelter;
  - (B) identifies the donor, sponsor, or contributor of the shelter;
  - (C) contains a public service message that occupies at least 50 percent of the area of the sign
  - (D) has no content other than that described by subparagraphs (B) and (C) of this paragraph
  - (E) is authorized or approved by the law of the entity that controls the highway involved, including being located at a place approved by the entity;
  - (F) has a sign face that does not exceed an area of 32 square feet; and
  - (G) is not facing the same direction as any other sign on the seating bench or shelter

Attachment: Shipp Digital Sign at DQ on Richmond Updated 20140521 (1091 : Ord. 2014-

Rule 21.146 – Exempt Signs (cont)

- (8) a sign that is erected and maintained by a public school, a college or university, or a nonprofit agricultural fair, but only if the information presented on the sign is limited to information about the meetings, services, events, or on premise activities of the entity, and the total area of the sign's face facing a particular direction of travel does not exceed 200 square feet.
- (9) a sign that shows only the name of a ranch on which livestock are raised or a farm on which crops are grown, and the directions to, telephone number, or internet address of the ranch or farm, and that has a sign face that does not exceed an area of 32 square feet;
- (10) a sign that:
  - (A) relates only to a public election;
  - (B) is located on private property;
  - (C) is erected after the 91st day before the date of the election and is removed before the 11th day after the election date;
  - (D) has a sign face that does not exceed an area of 50 square feet; and
  - (E) contains no commercial endorsement; and

Attachment: Shipp Digital Sign at DQ on Richmond Updated 20140521 (1091 : Ord. 2014-

Rule 21.146 – Exempt Signs (cont)

- (11) a sign identifying the name of a recorded subdivision located at an entrance to the subdivision or on property owned by or assigned to the subdivision, home owners association, or other entity associated with the subdivision.
- (b) This division does not apply to a sign that was erected before October 23, 1965 and that the commission, with the approval of the Secretary of the United States Department of Transportation, has determined to be a landmark sign of such historic or artistic significance that preservation would be consistent with the purposes of the Highway Beautification Act of 1965, 23 United States Code 131.
- (c) An on-premise sign cannot erected earlier than one year before the date that the business for which the sign is erected will open and conduct business.

Attachment: Shipp Digital Sign at DQ on Richmond Updated 20140521 (1091 : Ord. 2014-

Will TxDOT Issue the Permit?

- Unknown at this time
- Spacing between signs is the next consideration

Attachment: Shipp Digital Sign at DQ on Richmond Updated 20140521 (1091 : Ord. 2014-

Rule 21.187 – Spacing of Signs

- (a) **Permitted signs on the same side of regulated freeway, including frontage roads, may not be erected closer than 1,500 feet apart.**
- (b) For a highway on a non-freeway primary system and outside the incorporated boundaries of a municipality, permitted signs on the same side of the highway may not be erected closer than 750 feet apart.
- (c) For a highway on a non-freeway primary system highway and within the incorporated boundaries of a municipality, permitted signs on the same side of the highway may not be erected closer than 300 feet apart.
- (d) For the purposes of this section, the space between signs is measured between points along the right of way of the highway perpendicular to the center of the signs.

Attachment: Shipp Digital Sign at DQ on Richmond Updated 20140521 (1091 : Ord. 2014-

Rule 21.187 – Spacing of Signs (cont)

- (e) For the purpose of this section, a municipality's extraterritorial jurisdiction is not considered to be included within the boundaries of the municipality.
- (f) This section does not apply to directional signs, on premise signs, or official signs that are exempted from the application of Transportation Code, 391.031.
- (g) **The spacing requirements of this section do not apply to signs separated by buildings, natural surroundings, or other obstruction in a manner that causes only one of the signs to be visible within the specified spacing area.**

Attachment: Shipp Digital Sign at DQ on Richmond Updated 20140521 (1091 : Ord. 2014-

Rule 21.187 – Spacing of Signs (cont)

- (h) A permitted sign may not be erected within five feet of the highway right of way. The distance shall be measured from the end of the sign face nearest the right of way line.
- (i) A permitted sign that is being displaced by a highway construction project will not be considered in determining the spacing for a new sign application.

Attachment: Shipp Digital Sign at DQ on Richmond Updated 20140521 (1091 : Ord. 2014-

Attachment: Shipp Digital Sign at DQ on Richmond Updated 20140521 (1091 : Ord. 2014-

Attachment: Shipp Digital Sign at DQ on Richmond Updated 20140521 (1091 : Ord. 2014-

Attachment: Shipp Digital Sign at DQ on Richmond Updated 20140521 (1091 : Ord. 2014-

Are the two signs visible at the same time?

- (g) **The spacing requirements of this section do not apply to signs separated by buildings, natural surroundings, or other obstruction in a manner that <u>causes only one of the signs to be visible within the specified spacing area</u>.**

Attachment: Shipp Digital Sign at DQ on Richmond Updated 20140521 (1091 : Ord. 2014-

Attachment: Shipp Digital Sign at DQ on Richmond Updated 20140521 (1091 : Ord. 2014-

Richmond Rd
Richmond Rd
New Ca
30
59
200 ft
50 m
Imagery ©2014 Google, Map data ©2014 Google
Edit in Google Map Maker
Report a problem

Can the City Require TxDOT Permit First?

Attachment: Shipp Digital Sign at DQ on Richmond Updated 20140521 (1091 : Ord. 2014-

Can the City Require TxDOT Permit First?

- Rule 21.159 Permit Application
- Section (c) states if the sign is to be located within the jurisdiction of a municipality, including the extraterritorial jurisdiction of the municipality, that is exercising its authority to regulate outdoor advertising, a certified copy of the permit issued by the municipality must be submitted with the application unless documentation is provided to **show that the municipality requires: (1) the issuance of a department permit before the municipality's**; or (2) the erection of the sign within a period of less than twelve months after the date of the issuance of the municipal permit.

Attachment: Shipp Digital Sign at DQ on Richmond Updated 20140521 (1091 : Ord. 2014-

City of Texarkana, Texas

Briefing Sheet

Version:
Update Date: 4/17/2014 1:26 PM

Lead Department: Public Works **Action Officer:** Debbie Burk,

Subject: Ordinance No. 2014-051 granting a Specific Use Permit to allow the one additional use of a tattoo studio on the east 75' of Lots 1-3, C.E. Huckabee's Garden Addition, located at 1002 Westlawn Drive. Ronald Griffith, owner. Eric McIntyre, applicant.

Briefing:	Public Hearing:	Second Briefing:	Council Vote:
6/9/2014	5/12/2014	May 27, 2014	6/9/2014

Item Schedule

Schedule 1: Brief twice - vote once (six weeks)

Updates/History of Briefing:

NOT APPLICABLE

Executive Summary and Background Information:

S-652: This is a request by Ronald Griffin, owner, and Eric McIntyre, agent, for a Specific Use Permit, SUP, to allow a tattoo studio on the east 75' of Lots 1-3, C.E. Huckabee Garden Addition, located at 1002 Westlawn Drive. Mr. McIntyre is currently in the process of remodeling this building to open a retail and piercing shop at this location. This request is to add the one additional use of a tattoo studio. Mr. McIntyre has indicated that the tattooing will be by "appointment only".

The adjacent zoning is Neighborhood Service to the north, MF-1 to the east and General Retail to the south and west. The adjacent land use is a residence to the north, vacant land to the south, an apartment complex to the east and a medical sales business to the west.

This property is zoned General Retail (GR). A Specific Use Permit is required to allow the one additional use of a tattoo studio in this zoning district. The application of permanent cosmetics is also considered a tattoo as well as any inked body art. The State of Texas will regulate this business as to licensing and other health related issues.

This request meets all city requirements to allow the one additional use of a tattoo studio on this property. It appears that there is adequate parking for this business.

If this request is approved, staff would suggest the following stipulations be placed in the Ordinance:

1. That the owner/or any employee performing the application of tattooing procedures be currently licensed by the State and meet all Federal, State and City licensing laws and health regulations. (A copy of the current license must be provided to the City prior to the opening of the business).
2. That if any complaints concerning minors or any violations of the regulations listed above occur, the City has the right to revoke the Specific Use Permit.
3. That if this use ever ceases at this location, the City may revoke the Specific Use Permit that allows a tattoo studio.
4. That the sale of tobacco products or drug paraphernalia is prohibited.
5. The hours of operation for the retail business will be 10 a.m. to 9 p.m. and "by appointment only" for the tattooing business.
6. Any remodeling of the current building must meet all city codes and requires licensed

contractors.

7. No painting of the windows or the building with advertisement or graphic art.

Potential Options:

None

Fiscal Implications:

None

Staff Recommendation:

Staff recommends for approval of the Specific Use Permit with listed stipulations.

Advisory Board/Committee Review:

Board/Committee Recommendation:

The Planning and Zoning Commission unanimously recommended for approval with stipulations.

Advisory Board/Committee Meeting Date and Minutes:

The Planning and Zoning Commission met on April 7, 2014 and unanimously recommended for approval of this request.

Attachments

a. Ordinance No. 2014-051 (DOCX)
b. Goals and Perspectives (DOCX)
c. Maps for Ord. # 2014-051 (PDF)
d. Ward map for Ord. # 2014-051 (PDF)

Staff Coordination

Public Works	Shirley Jaster	Department Head Review	Completed	04/17/2014 1:49 PM
Public Information Officer		Lisa Thompson	PIO Review	Completed 04/17/2014 2:07 PM
City Manager	John Whitson	City Manager Review	Completed	04/20/2014 9:58 PM
City Council	Jennifer Evans	Meeting	Completed	05/14/2014 8:46 AM

Meeting History

04/28/14	City Council	MOVED FORWARD	Next: 05/12/14
05/12/14	City Council	MOVED FORWARD	Next: 05/27/14

City of Texarkana, Texas

There were no comments made at this public hearing.

S-652

ORDINANCE NO. 2014-051

AN ORDINANCE OF THE CITY COUNCIL OF THE CITY OF TEXARKANA, TEXAS, AMENDING THE ZONING MAP SHOWING THE LOCATION, BOUNDARY AND USE OF CERTAIN PROPERTY BY THE GRANTING OF SPECIFIC USE PERMIT NO. S-652 TO ALLOW THE ONE ADDITIONAL USE OF A TATTOO STUDIO ON THE EAST 75' LOTS 1-3, C.E. HUCKABEE'S GARDEN ADDITION, LOCATED AT 1002 WESTLAWN DRIVE IN THE CITY OF TEXARKANA, BOWIE COUNTY, TEXAS; CONTAINING A REPEALER CLAUSE; CONTAINING A SEVERABILITY CLAUSE; AND ESTABLISHING AN EFFECTIVE DATE.

WHEREAS, an application has been filed with the City of Texarkana, Texas, requesting an Amendment to the Zoning Ordinance so as to grant a **Specific Use Permit** to allow the **one additional use of a tattoo studio** on the east 75' of Lots 1-3, C.E. Huckabee's Garden Addition, located at 1002 Westlawn Drive in the City of Texarkana, Bowie County, Texas; and

WHEREAS, the Planning and Zoning Commission of the City of Texarkana, Texas and the City Council of the City of Texarkana, Texas, in compliance with the laws of the State of Texas with reference to the granting of zoning classifications and changes, have given the requisite notices by publication and otherwise, and after holding hearings and affording a full and fair hearing to all property owners generally and to all persons interested and situated in the affected area and in the vicinity thereof; and

WHEREAS, after consideration of said application, the Planning and Zoning Commission of the City of Texarkana, Texas, voted **unanimously Six (6) to Zero (0) to recommend** to the City Council of Texarkana, Texas, that a **Specific Use Permit be granted to allow the one additional use of a tattoo studio** on said property; and

WHEREAS, after consideration of said application and the recommendation of the Planning and Zoning Commission, the City Council of the City of Texarkana, Texas, does hereby find that granting the **Specific Use Permit** is in the best interest of the public health, safety, morals and general welfare of the City;

NOW, THEREFORE, BE IT ORDAINED BY THE CITY COUNCIL OF THE CITY OF TEXARKANA, TEXAS:

SECTION 1: That the Zoning Ordinance of the City of Texarkana, Texas, Ordinance No. 127-70, passed and approved on September 14, 1970, be further amended so as to grant a **Specific Use Permit numbered S-652 for the purpose of allowing the one additional use of a tattoo studio** on the following described property, to-wit: **the east 75' of Lots 1-3, C.E. Huckabee's Garden Addition, located at 1002 Westlawn Drive in the City of Texarkana, Bowie County, Texas.**

SECTION 2: That the following special terms and conditions are hereby imposed and made part of this Ordinance:

1. That the owner/or any employee performing the application of tattooing procedures be currently licensed by the State and meet all Federal, State and City licensing laws and health regulations. (A copy of the current license must be provided to the City prior to the opening of the business).
2. That if any complaints concerning minors or any violations of the regulations listed above occur, the City has the right to revoke the Specific Use Permit.
3. That the sale of tobacco products or drug paraphernalia is prohibited.

Attachment: Ordinance No. 2014-051 (1090 : Ord. 2014-051 (SUP for tattoo studio at 1002 Westlawn Drive))

4. That if this use ever ceases at this location, the City may revoke the Specific Use Permit that allows a tattoo studio.
5. The hours of operation for the retail business will be from 10 a.m. to 9 p.m. and "by appointment only" for the tattooing business.
6. Any remodeling of the current building must meet all city codes and requires licensed contractors.
7. No painting of the windows or the building with advertisement or graphic art.

SECTION 2: All ordinances or parts of ordinances in conflict herewith are specifically repealed to the extent of such conflict.

SECTION 3: It is further provided that in case a section, clause, sentence or part of this Ordinance shall be deemed or adjudged by a court of competent jurisdiction to be invalid, then such invalidity shall not affect, impair, or invalidate the remainder of this Ordinance.

SECTION 4: That this Ordinance shall be in full force and effect from and after its passage and approval.

PASSED AND APPROVED in regular Council Session on this the 9th day of June, 2014.

ATTEST:

_____ _____

JENNIFER EVANS, CITY SECRETARY BOB BRUGGEMAN, MAYOR

Attachment: Ordinance No. 2014-051 (1090 : Ord. 2014-051 (SUP for tattoo studio at 1002 Westlawn Drive))

City of Texarkana, Texas

Developing Perspectives and Goals Pending Approval by the City Council:

Perspectives	Goals
Serve the Community	☐ Promote an Environmentally Sensitive & Livable Community ☐ Provide a Safe Community ☐ Deliver Quality Services ☐ Foster a Healthy Community
Run the Operations	☐ Enhance Community Preparedness & Responsiveness ☐ Maximize Partnership Opportunities ☐ Provide Courteous & Responsive Customer Service ☑ Model a Positive City Image ☐ Deliver Efficient Services ☑ Cultivate Community Involvement & Access
Manage the Resources	☐ Maintain Fiscal Strength ☐ Maximize Utilization & Resources ☐ Invest in Infrastructure & Transportation
Develop Personnel	☐ Develop a Skilled & Diverse Workforce ☐ Create a Positive & Rewarding Work Culture

Perspectives and Goals Additional Comments:

None

Resource Impact:

Staff time required if item is approved:	Select One By Clicking Here

Other Potential Impacts:

None

Public Information Plan:

☑	Newspaper Notice (Required by Statute)	☑	Public Hearing (Required by Statute)
☐	Public Forum/Input Session	☐	Press Release
☐	E-News Distribution	☑	Website Notice
☐	Social Media (Twitter, Facebook, etc.)	☑	Special Mailing
☐	Flyers Posted	☐	Banners Posted
☐	Survey	☐	Automated Phone Call
☐	None Required	☑	Sign posted

Other:

Attachment: Goals and Perspectives (1090 : Ord. 2014-051 (SUP for tattoo studio at 1002 Westlawn Drive))

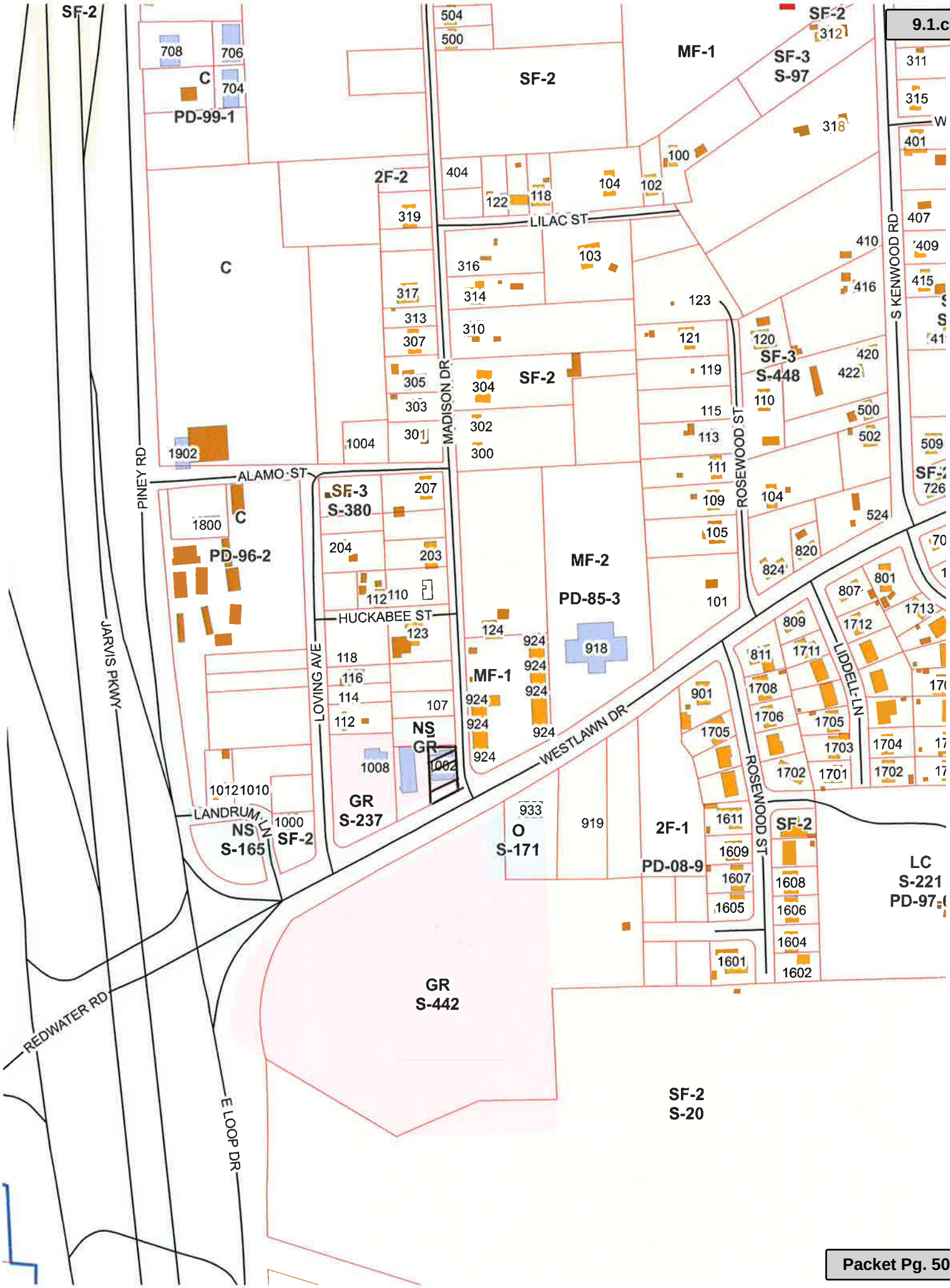

Attachment: Maps for Ord. # 2014-051 (1090 : Ord. 2014-051 (SUP for tattoo studio at 1002 Westlawn Drive))

Attachment: Maps for Ord. # 2014-051 (1090 : Ord. 2014-051 (SUP for tattoo studio at 1002 Westlawn Drive))

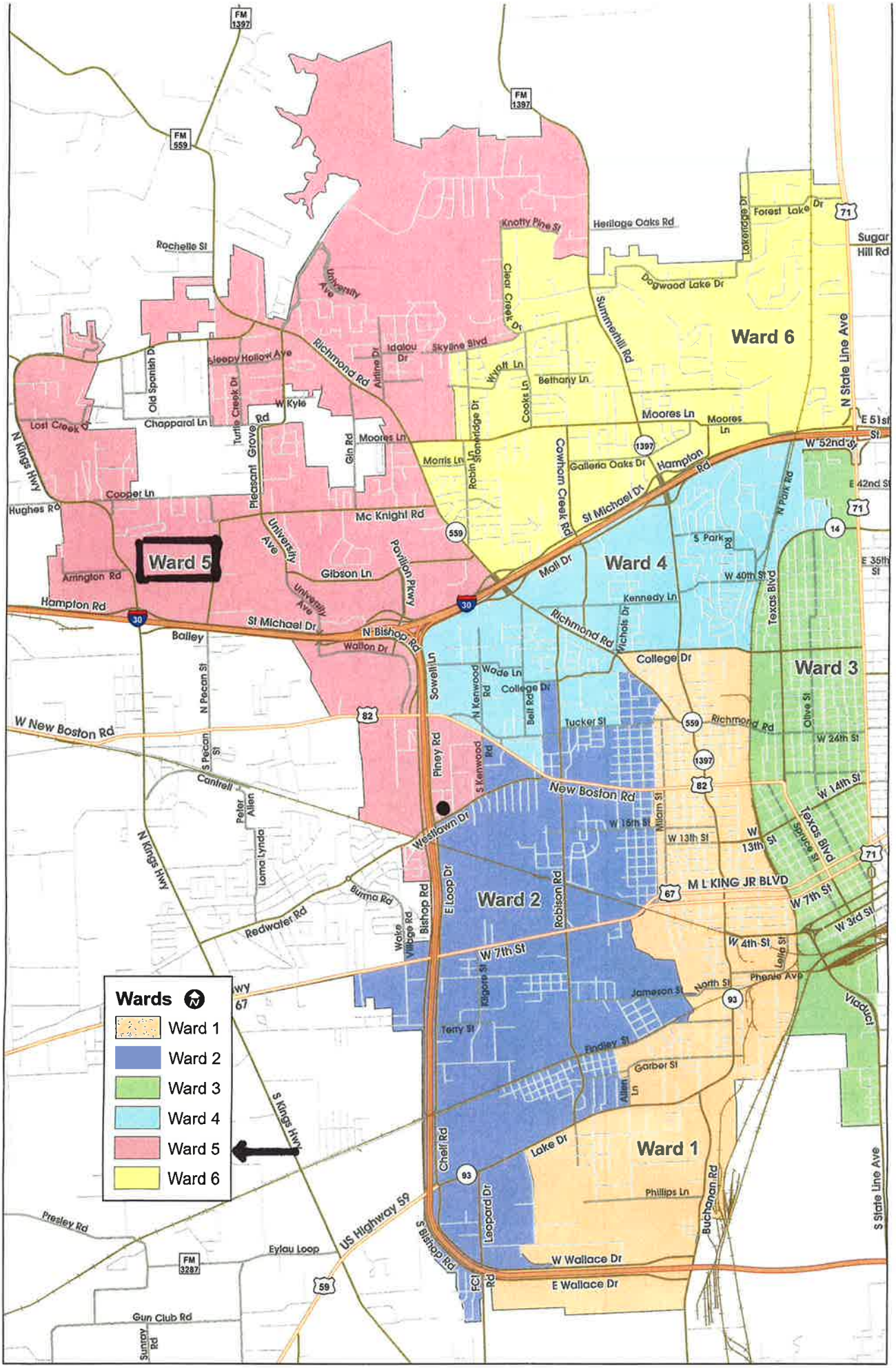

Attachment: Ward map for Ord. # 2014-051 (1090 : Ord. 2014-051 (SUP for tattoo studio at 1002 Westlawn Drive))