CITY OF TEXARKANA

CITY COUNCIL

AGENDA ● JULY 14, 2014

Council Chambers	Regular Meeting	6:00 PM

220 TEXAS BLVD.
TEXARKANA, TX 75501

Mayor

Bob Bruggeman

Ward 1	Ward 3	Ward 5
Brad Casteel	Tina Veal-Gooch	Bill Miller
Ward 2	**Ward 4**	**Ward 6**
Willie Ray	Brian Matthews	Josh Davis

The City Council reserves the right to convene into closed session on any agenda item or issue should the need arise and if applicable pursuant to authorization by the Texas Open Meetings Act (Title 5, Chapter 551 of the Texas Government Code).

If the City Council convenes into closed session, they will reconvene in one hour or less to take any final action, decision, or vote on a matter deliberated in closed session.

I. CALL TO ORDER, ROLL CALL, ESTABLISHMENT OF QUORUM

II. INVOCATION AND PLEDGE BY COUNCILMEMBER JOSH DAVIS

III. MAYOR'S OPENING REMARKS

Upcoming City Council Meetings:

Monday, July 28, 2014 at 6:00 p.m.
Monday, August 11, 2014 at 6:00 p.m.
Monday, August 25, 2014 at 6:00 p.m.
Monday, September 8, 2014 at 6:00 p.m.

Park & Recreation Events:

Saturday - Wednesday, July 12th - 16th - Spring Lake Park - Dixie North Regional Tournament
Starting - Monday, July 14th - Friday, July 25th - Wallace Park - Soccer Camp
Saturday, July 26th - Wallace Park - The Texarkana Officers Down 5K Run/Walk-8 a.m.-12 p.m.

Other City Events:

Farmer's Market at 305 Texas Blvd. (Tue., Thurs., & Sat. 7:00 a.m. until sold out)

Market Events:

Saturday, July 19th - 4th Annual Best Salsa in the Ark-La-Tex contest
Saturday, July 26th - Farm Fresh Cooking Series

Appointments to Boards & Commissions

IV. OPEN FORUM: COMMENTS FROM THE PUBLIC (LIMIT 5 MINUTES EACH)

V. ITEMS FOR CONSIDERATION

Consent Items

1. Consider approval of the minutes of the Regular Meeting of the City Council held on June 23, 2014 at 6:00 PM.

Susie Moss documents submitted in Open Forum at the June 23, 2014 council meeting.

Shaun Dierksen documents submitted at June 23, 2014 council meeting. (2014-082)

2. Ordinance No. 2014-066 approving and authorizing the reclassification of one Police Lieutenant position to a Police Sergeant position and authorizing assignment pay for the Police Department Chief of Staff.

   Public Hearing: June 9, 2014
   Second Briefing: June 23, 2014
   Council Vote: July 14, 2014

3. Resolution No. 2014-076 authorizing the City Manager to pay invoice costs from Southwest Electric Cooperative Corporation for the relocation of overhead electric lines for the Phase IV TAMU East Approach Construction Project in an amount not to exceed Eighty-Two Thousand Two Hundred Forty and 11/100 Dollars ($82,240.11).

   Public Hearing:
   Second Briefing:
   Council Vote: July 14, 2014

4. Resolution No. 2014-077 for the appointment of Municipal Judge and approval of a two-year Employment Agreement.

   Public Hearing:
   Second Briefing:
   Council Vote: July 14, 2014

Action Items

5. Ordinance No. 2014-052 granting a Specific Use Permit to allow the location of a CEVMS (digital) billboard on a part of Tract 18, George Brinlee HRS, A-18, located at 2506 Richmond Road. Mark Liepman, owner. Chad Shipp, Shipp Outdoor, LLC, agent. (Due to Planning and Zoning Commission denial, a 3/4 vote by the City Council is required to approve this request).

   Public Hearing: May 12, 2014
   Second Briefing: May 27, 2014
   Council Vote: July 14, 2014

6. Ordinance No. 2014-069 amending the University Planned Development District (UPDD) of the Zoning Ordinance to amend allowed uses in Area 8 along Richmond Road by adding the use of a landscape maintenance business with outdoor display sales and equipment. Jerry Clanton, owner. Andrea Freeman, agent. (Due to Planning and Zoning Commission denial, a 3/4 vote by the City Council is required to approve this request).

   Public Hearing: June 9, 2014
   Second Briefing: June 23, 2014
   Council Vote: July 14, 2014

VI. FIRST BRIEFINGS

1. Resolution No. 2014-083 approving the creation of a Master Fee List for the City of Texarkana, Texas permits and fees.

   Public Hearing: July 28, 2014
   Second Briefing: August 11, 2014
   Council Vote: August 25, 2014

2. Resolution No. 2014-084 approving the renaming of the current Bringle Lake Park to Bringle Lake West and the new addition of Bringle Lake Park to Bringle Lake East.

   Public Hearing:
   Second Briefing:
   Council Vote: July 28, 2014

3. Ordinance No. 2014-085 establishing a ninety (90) day Moratorium on the processing and approval of applications for the placement of "Off-Premise Signs" (Standard or CEVMS Billboards).

   Public Hearing: July 28, 2014
   Second Briefing:
   Council Vote: August 11, 2014

4. Resolution No. 2014-086 naming the new street constructed for access to Bringle Lake East Park, as Bringle Park Road.

   Public Hearing:
   Second Briefing:
   Council Vote: July 28, 2014

5. Resolution No. 2014-087 authorizing the City Manager to execute any necessary documents for Change Order #8 for the Morris Lane Phase II Construction Project, in an amount not to exceed Six Hundred Eighteen Thousand One Hundred Sixty-Four and 91/100 Dollars ($618,164.91).

   Public Hearing:
   Second Briefing:
   Council Vote: July 28, 2014

VII. PUBLIC HEARINGS

1. Resolution No. 2014-056 approving and adopting the Property Policy Manual.

   Public Hearing: July 14, 2014
   Second Briefing: July 28, 2014
   Council Vote: August 11, 2014

2. Public Hearing and Consider Ordinance No. 2014-081 granting a Specific Use Permit to allow the location of outdoor display rental equipment on Lots 1-8, Block 7, Estes Addition, located at 2022 Texas Boulevard. CHECKK Properties, owner. David Hughes, agent.

   Public Hearing: July 14, 2014
   Second Briefing:
   Council Vote: July 14, 2014

3. Resolution No. 2014-072 changing the remaining sections of old Lake Drive to Bertha Street, north of the Union Pacific Railroad and to McShane Street, south of the Union Pacific Railroad, due to the reconfiguration of Lake Drive and the construction of the Willie J. Ray Overpass.

   Public Hearing: July 14, 2014
   Second Briefing: July 28, 2014
   Council Vote: August 11, 2014

4. Ordinance No. 2014-073 amending the budget estimate of the revenues and expenditures for the fiscal year ending September 30, 2014, and adopting the budget and appropriating resources for the fiscal year beginning October 1, 2014 and ending September 30, 2015.

Public Hearing: July 14, 2014
Second Briefing: July 28, 2014
Council Vote: August 11, 2014

5. Resolution No. 2014-075 approving the application for the Edward Byrne Justice Assistance Grant providing a total grant in the amount of Forty-Eight Thousand Eight Hundred Twenty-Nine and No/100 Dollars ($48,829.00), where the City of Texarkana, Texas will receive Twenty-Four Thousand Four Hundred Fifteen and No/100 Dollars ($24,415.00) and Bowie County, Texas will receive Twenty-Four Thousand Four Hundred Fourteen and No/100 Dollars ($24,414.00).

   Public Hearing: July 14, 2014
   Second Briefing: July 28, 2014
   Council Vote: August 11, 2014

6. Ordinance No. 2014-079 amending Section 8-700(A) of the Zoning Ordinance by adding the definition of "donation bins".

   Public Hearing: July 14, 2014
   Second Briefing: July 28, 2014
   Council Vote: August 11, 2014

7. Ordinance No. 2014-080 granting a Specific Use Permit to allow the one additional use of a tattoo studio on Lots 7 & 8, Block 29, Ghio-Fish Boulevard Addition, located in the tenant space at 3218 1/2 Texas Boulevard. Jeff Kelly, owner. David Williams, agent. (Due to Planning and Zoning Commission denial, a 3/4 vote by the City Council is required to approve this request).

   Public Hearing: July 14, 2014
   Second Briefing: July 28, 2014
   Council Vote: August 11, 2014

8. Ordinance No. 2014-082 rezoning Lot 1 and west part of Lot 2, Block 7, Western Hills 2nd Addition, located at 22 Meadow Lane. Single Family-2 to Office. Jim and Rhonda Richey, owners. Shaun Dierkson, agent. (Due to Planning and Zoning Commission denial, a 3/4 vote by the City Council is required to approve this request).

   Public Hearing: July 14, 2014
   Second Briefing: July 28, 2014
   Council Vote: August 11, 2014

VIII. SECOND BRIEFING WITH UPDATES

IX. SECOND BRIEFING WITHOUT UPDATES

Resolution No. 2014-067 accepting the bid of Six Hundred Ninety Thousand, Five Hundred and Fifty-One Dollars and Eighty Nine Cents ($690,551.89) from J.R. Pope Company, Inc. and authorizing the City Manager to enter into a contract for the construction of STEP Project II Downtown Sidewalk Enhancements.

Public Hearing:	June 23, 2014
Second Briefing:	July 14, 2014
Council Vote:	July 28, 2014

X. ITEMS FOR DISCUSSION

Uninsured/Underinsured Motorists

XI. ADMINISTRATIVE COMMENTS

1. Council
2. Staff

XII. ADJOURNMENT

_____

Jennifer Evans, City Secretary

This meeting is being conducted in accordance with the Texas Open Meetings Law (V.T.C.A. Government Code 551).

This meeting is being conducted in accordance with the Americans with Disabilities Act [42 USC 12101 (1991)]. The facility is wheelchair accessible and handicap parking is available. Requests for sign interpretive services are available upon requests received at least 48 hours prior to the meeting. To make arrangements for these services, please call 903.798.3917, Personnel or (TDD) 1.800.RELAY.TX (1.800.735.2989).

CITY OF TEXARKANA

CITY COUNCIL

MINUTES • JUNE 23, 2014

Council Chambers | **Regular Meeting** | **6:00 PM**

220 TEXAS BLVD.
TEXARKANA, TX 75501

I. CALL TO ORDER, ROLL CALL, ESTABLISHMENT OF QUORUM

ee Name	Title	Status	Arrived
ggeman	Mayor	Present	
steel	Ward 1	Present	
ay	Ward 2	Present	
al-Gooch	Ward 3	Present	
atthews	Ward 4	Absent	
ler	Ward 5	Present	
vis	Ward 6	Present	

Staff Present: City Manager John Whitson, Jennifer Evans, Bill King, Jim Cornelius, Kristin Peeples, Shirley Jaster, Charlie Bassett, Pam Burns, Holly Wall, Craig Hicks, Jim Powell, David Orr, Eric Schlotter, Kyle Dooley, Robby Robertson, Michael Henry, Lisa Thompson, Karey Parker, Sherry Jackson Hawkins, Craig Lindholm, and Jerry Sparks.

Legal Counsel: None

II. INVOCATION AND PLEDGE BY MAYOR BOB BRUGGEMAN

III. MAYOR'S OPENING REMARKS

Upcoming City Council Meetings:

Monday, July 14, 2014 at 6:00 p.m.
Monday, July 28, 2014 at 6:00 p.m.
Monday, August 11, 2014 at 6:00 p.m.
Monday, August 25, 2014 at 6:00 p.m.

Park & Recreation Events:

Saturday & Sunday, June 28th - 29th - Spring Lake Park - Four States Amateur Radio Club Field Day
Saturday - Wednesday, July 5th - 9th - Spring Lake Park - Dixie State Baseball 8U Tournament
Saturday - Wednesday, July 12th - 16th - Spring Lake Park - Dixie North Regional Tournament
Saturday & Sunday, July 12th - 13th - Karrh Park - Texas State Softball Tournament

Other City Events:

Farmer's Market at 305 Texas Blvd. (Tue., Thurs., & Sat. 7:00 a.m. until sold out)

Market Events:

Saturday, June 28th - 4th Annual Tomato Contest
Saturday, July 5th - Main Street Texarkana Market Day
Saturday, July 12th - Farm Fresh Cooking Series

Information and Presentation

Mayor Bruggeman mentioned that an iPad was found outside the council chambers after the May 27th council meeting. The owner can contact City Secretary, Jennifer Evans, for identification and claim.

1. June KTB Awards Presentation for Residential and Business of the Month

   Residential: Dr. Norris C. Knight, 4041 Texas Boulevard - Councilmember Veal-Gooch presented the award to Dr. Knight.
   Business: The Kids Spot Dentistry, 6008 Summerfield Drive - Councilmember Davis presented the award to Dr. Chris Potts.

2. Presentation on the Repurposing of 203 - 205 W. Broad Street

   Craig Lindholm did a brief presentation. Andrea Goesl Chewning of, Texarkana Animal Shelter, addressed council. Jason Cram, architect of Vintage Design Group, addressed council.

Appointments to Boards & Commissions

There were no appointments made by council to boards & commissions.

IV. OPEN FORUM: COMMENTS FROM THE PUBLIC (LIMIT 5 MINUTES EACH)

Susie Moss addressed council concerning speeding automobiles on 8th Street/MLK Blvd, uninsured drivers, the "rumored" construction of a convenience store on Hwy 67 West and female clothing. Ms. Moss submitted documents for council review.

V. ITEMS FOR CONSIDERATION

Consent Items

(6:48 p.m.)

RESULT:	**ADOPTED [UNANIMOUS]**
MOVER:	Tina Veal-Gooch, Ward 3
SECONDER:	Bill Miller, Ward 5
AYES:	Casteel, Ray, Veal-Gooch, Miller, Davis
ABSENT:	Matthews
EXCUSED:	Bruggeman

Consider approval of the minutes of the Regular Meeting of the City Council held on June 9, 2014 at 6:00 PM.

(6:48 p.m.)

Open Forum Documents- Susie Moss

Public Hearing: {ResUserDate1:MMMM d, yyyy}
Second Briefing: {ResUserText1}
Council Vote: {ResUserDate2:MMMM d, yyyy}

Action Items

1. Ordinance No. 2014-054 prohibiting the wearing of pants below the waist inappropriately exposing skin or undergarments (i.e., sagging).

   Public Hearing: May 27, 2014
   Second Briefing: June 9, 2014
   Council Vote: June 23, 2014

   Councilmember Casteel made comments in favor of passing this ordinance. No citizen spoke to this item.
   (6:56 p.m.)

RESULT:	**DEFEATED [2 TO 3]**
MOVER:	Brad Casteel, Ward 1
SECONDER:	Josh Davis, Ward 6
AYES:	Casteel, Davis
NAYS:	Ray, Veal-Gooch, Miller
ABSENT:	Matthews
EXCUSED:	Bruggeman

VI. FIRST BRIEFINGS

1. Resolution No. 2014-072 changing the remaining sections of old Lake Drive to Bertha Street, north of the Union Pacific Railroad and to McShane Street, south of the Union Pacific Railroad, due to the reconfiguration of Lake Drive and the construction of the Willie J. Ray Overpass.

   Public Hearing: July 14, 2014
   Second Briefing: July 28, 2014
   Council Vote: August 11, 2014

   Kyle Dooley briefed this item.

RESULT:	**MOVED FORWARD**	**Next: 7/14/2014 6:00 PM**

2. Ordinance No. 2014-073 amending the budget estimate of the revenues and expenditures for the fiscal year ending September 30, 2014, and adopting the budget and appropriating resources for the fiscal year beginning October 1, 2014 and ending September 30, 2015.

Public Hearing: July 14, 2014
Second Briefing: July 28, 2014
Council Vote: August 11, 2014

Charlie Bassett briefed this item and thanked the finance department staff for their efforts in preparing the 2014-15 city budget. Bill King briefed the Texarkana Water Utilities (TWU) budget. Jim Cornelius briefed additional items for the TWU budget.
(Councilmember Davis left the meeting at 8:09 p.m. and returned to the meeting at 8:12 p.m.)

RESULT:	**MOVED FORWARD**	**Next: 7/14/2014 6:00 PM**

3. Resolution No. 2014-075 approving the application for the Edward Byrne Justice Assistance Grant providing a total grant in the amount of Forty-eight Thousand Eight Hundred Twenty-nine and No/100 Dollars ($48,829.00), where the City of Texarkana, Texas will receive Twenty-four Thousand Four Hundred Fifteen And No/100 Dollars ($24,415.00) and Bowie County, Texas will receive Twenty-four Thousand Four Hundred Fourteen and No/100 Dollars($24,414.00).

Public Hearing: July 14, 2014
Second Briefing: July 28, 2014
Council Vote: August 11, 2014

Michael Henry briefed this item.
(Councilmember Miller left the meeting at 8:13 p.m. and returned to the meeting at 8:18 p.m.)

RESULT:	**MOVED FORWARD**	**Next: 7/14/2014 6:00 PM**

4. Resolution No. 2014-076 authorizing the City Manager to pay invoice costs from Southwest Electric Cooperative Corporation for the relocation of overhead electric lines for the Phase IV TAMU East Approach Construction Project in an amount not to exceed Eighty-Two Thousand Two Hundred Forty Dollars and 11/100 ($82,240.11).

Public Hearing:
Second Briefing:
Council Vote: July 14, 2014

Kyle Dooley briefed this item.

RESULT:	**MOVED FORWARD**	**Next: 7/14/2014 6:00 PM**

5. Resolution No. 2014-077 for the appointment of Municipal Judge and approval of a two-year Employment Agreement.

Public Hearing:
Second Briefing:
Council Vote: July 14, 2014

City Manager Whitson briefed this item.

RESULT:	**MOVED FORWARD**	**Next: 7/14/2014 6:00 PM**

6. Ordinance No. 2014-079 amending Section 8-700(A) of the Zoning Ordinance by adding the definition of "donation bins".

Public Hearing: July 14, 2014
Second Briefing: July 28, 2014
Council Vote: August 11, 2014

Shirley Jaster briefed this item.
(Councilmember Casteel left the meeting at 8:29 p.m. and returned to the meeting at 8:43 p.m.)

RESULT:	**MOVED FORWARD**	**Next: 7/14/2014 6:00 PM**

7. Ordinance No. 2014-080 granting a Specific Use Permit to allow the one additional use of a tattoo studio on Lots 7 & 8, Block 29, Ghio-Fish Boulevard Addition, located in the tenant space at 3218 1/2 Texas Boulevard. Jeff Kelly, owner. David Williams, agent. (Due to Planning and Zoning Commission denial, a 3/4 vote by the City Council is required to approve this request).

Public Hearing: July 14, 2014
Second Briefing: July 28, 2014
Council Vote: August 11, 2014

Shirley Jaster briefed this item.

RESULT:	**MOVED FORWARD**	**Next: 7/14/2014 6:00 PM**

8. Ordinance No. 2014-081 granting a Specific Use Permit to allow the location of outdoor display rental equipment on Lots 1-8, Block 7, Estes Addition, located at 2022 Texas Boulevard. CHECKK Properties, owner. David Hughes, agent.

Public Hearing: July 14, 2014
Second Briefing: July 28, 2014
Council Vote: August 11, 2014

David Hughes of, Contractor Sales and Rentals, briefed this item.

RESULT:	MOVED FORWARD	Next: 7/14/2014 6:00 PM

9. Ordinance No. 2014-082 rezoning Lot 1 and west part of Lot 2, Block 7, Western Hills 2nd Addition, located at 22 Meadow Lane. Single Family-2 to Office. Jim and Rhonda Richey, owners. Shaun Dierkson, agent. (Due to Planning and Zoning Commission denial, a 3/4 vote by the City Council is required to approve this request).

   Public Hearing: July 14, 2014
   Second Briefing: July 28, 2014
   Council Vote: August 11, 2014

   Shaun Dierkson briefed this item. Mr. Dierkson submitted documents for council review. Shirley Jaster added additional comments for this item in regards to Planning and Zoning Commission denial.

RESULT:	MOVED FORWARD	Next: 7/14/2014 6:00 PM

VII. PUBLIC HEARINGS

1. Resolution No. 2014-067 accepting a bid and authorizing the City Manager to enter into a contract for the construction of STEP Project II Downtown Sidewalk Enhancements.

   Public Hearing: June 23, 2014
   Second Briefing: July 14, 2014
   Council Vote: July 28, 2014

   No citizen spoke at this public hearing. Kyle Dooley mentioned that bids open on June 30th and updated information would be provided for council at the July 14th council meeting.

RESULT:	MOVED FORWARD	Next: 7/14/2014 6:00 PM

2. Resolution No. 2014-074 authorizing the acceptance of a bid for the re-carpeting of the Perot Theatre.

   Public Hearing: June 23, 2014
   Second Briefing: July 14, 2014
   Council Vote: July 28, 2014

   Brian Goesl spoke at this public hearing. Randal Conry displayed a sample remnant of the proposed carpet for council consideration.
   (9:02 p.m.)

RESULT:	**ADOPTED [UNANIMOUS]**
MOVER:	Tina Veal-Gooch, Ward 3
SECONDER:	Josh Davis, Ward 6
AYES:	Casteel, Ray, Veal-Gooch, Miller, Davis
ABSENT:	Matthews
EXCUSED:	Bruggeman

VIII. SECOND BRIEFING WITH UPDATES

1. Ordinance No. 2014-069 amending the University Planned Development District (UPDD) of the Zoning Ordinance to amend allowed uses in Area 8 along Richmond Road by adding the use of a landscape maintenance business with outdoor display sales and equipment. Jerry Clanton, owner. Andrea Freeman, agent. (Due to Planning and Zoning Commission denial, a 3/4 vote by the City Council is required to approve this request).

   Public Hearing: June 9, 2014
   Second Briefing: June 23, 2014
   Council Vote: July 14, 2014

   Shirley Jaster spoke to this item. Councilmember Miller suggested alternative language to be used in the ordinance.

RESULT:	**MOVED FORWARD**	**Next: 7/14/2014 6:00 PM**

IX. SECOND BRIEFING WITHOUT UPDATES

1. Resolution No. 2014-060 adopting the 2014 HUD Program Year City of Texarkana Community Development Block Grant Action Plan.

   Public Hearing: June 9, 2014
   Second Briefing: June 23, 2014
   Council Vote: July 14, 2014

   (9:15 p.m.)

RESULT:	**ADOPTED [UNANIMOUS]**
MOVER:	Bill Miller, Ward 5
SECONDER:	Tina Veal-Gooch, Ward 3
AYES:	Casteel, Ray, Veal-Gooch, Miller, Davis
ABSENT:	Matthews
EXCUSED:	Bruggeman

2. Ordinance No. 2014-066 approving and authorizing the reclassification of one Police Lieutenant position to a Police Sergeant position and authorizing assignment pay for the Police Department Chief of Staff.

Public Hearing: June 9, 2014
Second Briefing: June 23, 2014
Council Vote: July 14, 2014

RESULT:	**MOVED FORWARD**	**Next: 7/14/2014 6:00 PM**

X. ITEMS FOR DISCUSSION

Staff Updates

City Manager Whitson mentioned to council that he would be attending the TCMA annual conference beginning Wednesday, June 25th. Shirley Jaster will be acting City Manager in his absence.

XI. ADMINISTRATIVE COMMENTS

1. Council

   No comments from council.

2. Staff

   No comments from staff.

XII. ADJOURNMENT

1. Motion to Adjourn

   A motion was made to adjourn the meeting.
   (9:16 p.m.)

RESULT:	**ADOPTED [UNANIMOUS]**
MOVER:	Tina Veal-Gooch, Ward 3
SECONDER:	Willie Ray, Ward 2
AYES:	Casteel, Ray, Veal-Gooch, Miller, Davis
ABSENT:	Matthews
EXCUSED:	Bruggeman

Version: B

Briefing Sheet

Update Date: 7/5/2014 1:08 PM

Lead Department: City Secretary **Action Officer:** Jennifer Evans, City Secretary

Subject: Susie Moss documents submitted in Open Forum at the June 23, 2014 council meeting.

Updates/History of Briefing:

(Insert Date Here):
(Insert Text Here) or Select, Delete this and all text with parentheses and say "NOT APPLICABLE"

Executive Summary and Background Information:

Potential Options:

- List or "None"
-

Fiscal Implications:

(Insert Text Here)

Staff Recommendation:

(Insert Text Here)

Advisory Board/Committee Review:

(Advisory Board/Committee Name OR say "NONE")

Board/Committee Recommendation:

(Insert Date Here):
(Insert Text Here or say "NOT APPLICABLE")

Advisory Board/Committee Meeting Date and Minutes:

(Insert Minutes Here) or Select, Delete this and all text in this area and say "NOT APPLICABLE"

Attachments

a. Susie Moss Docs 062314 (PDF)

May 6, 2014

City Attorney
City Hall
220 Texas Boulevard
Texarkana, TX 75501

To Whom It May Concern:

We, the undersigned residents of W 8th Street / Martin Luther King, Jr. Blvd / W Hwy 67 ("our street"), are interested in gathering information to present to the Texas Department of Transportation ("TX-DoT"). We fee that the speed on our street is excessive and dangerous. Just today I witnessed two cars run the red light.

We live on a residential street. Our street has people of all ages and some people have pets. It is a neighborhood. It has been a residential/neighborhood since the 1930's and should have a residential / neighborhood speed limit.

We would like the statistics for the last 18 months of all traffic accidents and all traffic citations occurring on our street.

1604 W 8th Street / Martin Luther King, Jr. Blvd / W Hwy 67 has had the porch damaged; vegetation/plants damaged; cars have run across the lawn. Most recently a van rolled over into the front yard and damaged a plant.

1616 W 8th Street / Martin Luther King, Jr. Blvd / W Hwy 67 has had the fence damaged when a car ran into it / thru it and ran into the yard; after several months - the fence has still not been repaired.

Please provide us with the requested information so that we might pursue the decrease in the speed for safety of the residence/pets of our street.

Thank you for your prompt attention to this matter. Sincerely,

Susie C. Moss

* Susie C. Moss 1604 W 8th Street / Martin Luther King, Jr. Blvd / W Hwy 67

Florida Taylor

Florida Taylor 1616 W 8th Street / Martin Luther King, Jr. Blvd / W Hwy 67

* Mailing address: P.O. Box 3383, T T 75501

Attachment: Susie Moss Docs 062314 (1142 : Susie Moss Documents (6/23/14 mtg))

CITY OF TEXARKANA, TEXAS
P.O. BOX 1967 TEXARKANA, TX 75504 PHONE 903.798.3900

May 15, 2014

Ms. Susie C. Moss
1604 W. 8th Street
P. O. Box 3383
Texarkana, Texas 75504-3383

Re: FOI May 6, 2014

Dear Ms. Moss:

Per your request, dated May 6, 2014, I am enclosing "...the statistics for the last 18 months of all traffic accidents…occurring on our street…" We have a new software that is not conducive to pulling the individual traffic citations for locations in a list format.

Hopefully, this will be beneficial for your needs. Should you need further assistance, please let us know.

Sincerely,

Pamela N. Burns
Asst. City Secretary

Enclosures

Attachment: Susie Moss Docs 062314 (1142 : Susie Moss Documents (6/23/14 mtg))

CASE NUMBER	DATE	TIME (HOUR BLOCK)	LOCATION
T12-08305	9/8/2012	0500	Martin Luther King Jr. Blvd & Summerhill Road
T12-08972	9/30/2012	1800	Martin Luther King Jr. Blvd & Milam Street
T13-00847	1/30/2013	1700	Martin Luther King Jr. Blvd & Summerhill Road
T13-01419	2/18/2013	1700	Martin Luther King Jr. Blvd & Summerhill Road
T13-01749	3/2/2013	1600	Martin Luther King Jr. Blvd & Bowie Street
T13-02018	3/11/2013	1700	Martin Luther King Jr. Blvd. & Milam Street
T13-02206	3/18/2013	1300	2400 Block of Martin Luther King Jr. Blvd
T13-03953	4/12/2013	1700	1400 Block of Martin Luther King Jr. Blvd
T13-04128	4/18/2013	1700	Martin Luther King Jr. Blvd & Waterall Street
* T13-04135	4/18/2013	2100	Martin Luther King Jr. Blvd & Summerhill Road
T13-07719	8/24/2013	1200	1400 Block of Martin Luther King Jr. Blvd
* T13-08921	10/5/2013	2000	Martin Luther King Jr. Blvd & Summerhill Road
T13-09600	10/29/2013	1200	Martin Luther King Jr. Blvd & Summerhill Road

4/14 ✓ ✓ ✓ van hit & rolled into yard.

* one of these was a fatality, or another accident is not on here.

Attachment: Susie Moss Docs 062314 (1142 : Susie Moss Documents (6/23/14 mtg))

5.a

ws Sports Finance Weather Games Groups Answers Screen Flickr Mobile | More

Search Mail Search Web Susie

Delete Move Spam More

Speed from Waterall to Milam, Texarkana, TX

Susie Moss Apr 1

To lance.simmons@txdot.gov, susiemoss92623@yahoo.com, SusieMoss75504@yahoo.com

Good morning,

I thought I had sent you an e-mail, but for the life of me, I can't find it, and I have not had a response from you, so...if I did, great! If not, here it is!

I took a trip to S Texas and found that along the way many areas were limited re: speed:

1) US 77 through Refugio, TX = speed: 35 miles per hour
2) US 77 through Odem, TX = speed: 35 miles per hour
3) US 77 through Los Fresnos = speed: 30 and 35 miles per hour
4) US 77 through Laguna Heights = speed: 35 miles per hour
5) US 77 through Port Isabel = speed: 30 and 35 miles per hour
6) TX 100 through S Padre Island = speed: 30 miles per hour

Another item is when a road goes by a school, the speed is lowered. I'm guessing because schools have people. Residential areas have people. The speed should be consistent w/people being a factor. My residential area was here long before Hwy 67 came down the street. People have to get out of and turn into their driveways.

My driveway is often blocked by traffic. People don't pay attention. I have to wait for the light to change and traffic to pass to get out.

A convenience store is to be built at W 8th/ MLK / 67 and Lake Dr./Summerhill Rd./93. People will be turning into and coming out of the convenience store in due time. It could get ugly w/traffic speeding.

I took your suggestion and called the police department. I was told someone had already called. I was down at the police bldg. today and inquired about reporting speeding traffic. I was told to call 911. I haven't called 911, but I will in due time.

I would greatly appreciate the 4.5 blocks between Waterall, Summerhill, Brown, Bowie and Milam having a safe speed limit because these 4.5 blocks are residential w/people and older homes. My home has many cracks in the stucco due to vibrating due to the speed of larger vehicles. My house shakes and vibrates when larger trucks and 18-wheelers and concrete mixers speed down the street.

I have attached the following article about a 9-year old boy feeling that cars should be slower in residential areas.

I would greatly appreciate your help in this matter. It is only 4.5 blocks, but it will mean a great deal to me for my house to last as long as I need it and the residents in these 4.5 blocks. Thank you, Susie Moss

Your friend no-reply@yahoo.com has shared a link with you.

9-Year-Old's Conn. Letter to Police Gets Response | ABC News Blogs - Yahoo

http://gma.yahoo.com/blogs/abc-blogs/9-olds-conn-letter-police-gets-response-184718787--abc-news-topstories.html

A 9-year-old Connecticut boy who saw cars whizzing down his neighborhood street as he waited for the school bus each day did what a lot of adults might not have done. He took action. Isaiah McLoughlin, of Waterford, Conn., sent a handwritten letter to his...

Read the full story

This email was sent to you at the request of one of our users. To learn more about Yahoo's use of

Attachment: Susie Moss Docs 062314 (1142 : Susie Moss Documents (6/23/14 mtg))

Subject: Martin Luther King Street speed

From: Susie Moss (susiemoss92623@yahoo.com)

To: lance.simmons@txdot.gov;

Date: Tuesday, April 15, 2014 2:07 PM

Mr. Simmons:

Here is an example of why the speed should be a RESIDENTIAL speed of 25-30 miles an hour. I'm not in town to take my own pictures, but the article is worth whatever I could have done had I been home.

PLEASE get the speed set for the residents safety. The lawn is MY lawn. I have mentioned before re: the chip in my porch due to a car running across the lawn and hitting it. I am having the lawn and trees checked. If there is damage, I will be pursuing damages w/the insurance companies involved.

Thank you, Susie Moss

Begin forwarded message:

Attachment: Susie Moss Docs 062314 (1142 : Susie Moss Documents (6/23/14 mtg))

5.a

Sign-up for Free Breaking News Email Alerts!

Texarkana Gazette
"Serving the Four States Area"

Crash prompts residents to talk about dangerous street

By: Michelle Williams - Texarkana Gazette

A roll-over crash Monday at the intersection of Summerhill Road and Martin Luther King Jr. Boulevard prompted some residents to speak out about the dangers of driving on and living alongside the heavily traveled streets.

Staff photo by Evan Lewis Neighbor Florida Taylor, center, and others stand Monday afternoon near a Dodge Caravan that was side-swiped and rolled over landing in the front yard of 1604 Martin Luther King Jr. Blvd. The driver of the van was taken to a local hospital with unknown injuries.

The crash occurred about 4:25 p.m. A 2003 Chevrolet Silverado pickup, traveling north on Summerhill Road and driven by Alex Nelson, 25, of Texarkana, Texas, collided with a 2002 Dodge Caravan, traveling west on Martin Luther King and driven by Richard Blackwell, 50, of Texarkana, Texas.

The van rolled several times, witnesses said, coming to rest on its roof in the yard of a home on the northwest corner of the intersection.

The Chevrolet truck veered north and east, jumping a curb and stopping, upright, on the sidewalk on the opposite side of the crossway.

"We heard a boom and by the time we got out of the house to see what was going on, the van was flipped," said Albert Jones, who lives aproximately 1-1/2 blocks west of the crash site.

Jones said as he approached the van, the driver was attempting to "crawl out his broken window."

"I pulled him out. I think he thought the van was on fire because there was smoke coming from the (driver's) airbag. He just kept saying, 'He hit me. That guy hit me,'" and he wanted to call his wife. He just wanted to call his wife," he said.

Jones said, once out of the crashed vehicle, the injured man attempted to stand and walk.

"I tried to keep him from getting up. He was stumbling, like. He was wounded," he said.

Leonardo Conkleton was walking along the south side of the street when the crash happened. He said the driver of the Chevrolet truck "ran the light" and "crashed into" the van; he added the driver of the van "didn't even see him and didn't have time to get out of the way."

Sponsor

VA Home Loans - $0 Down

veteransunited.com

See If You Qualify For A VA Loan. PreQualify Online In Just 2 Minutes

Featured Business

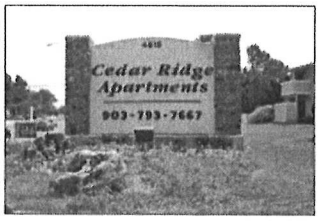

Cedar Ridge Apartments
4615 Summerhill Road
Texarkana, TX 75501
903-831-5491 (Karen)
Read more about this business
Visit Website

Popular Science Honors Year's Top Inventions
AP

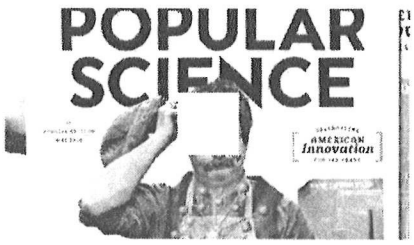

OC Serial Murder Suspects May Have More Victims
OC Serial Murder Suspects May Have More Victims

Attachment: Susie Moss Docs 062314 (1142 : Susie Moss Documents (6/23/14 mtg))

Conkleton ran to offer assistance and heard the injured man asking for his cellphone. He attempted to find it for him and discovered the phone had been ejected from the van and was in the middle of the intersection.

The van's driver was transported by LifeNet ambulance to a local hospital for treatment of unspecified injuries. The driver of the Chevy truck refused transport for medical attention.

After the ambulance pulled away and a tow truck was loading the disabled van, Jones talked about the frequency of accidents at the intersection and on MLK.

"This is a bad intersection and a dangerous street. I've lived here going on seven months and I know there's been at least five wrecks, in that time, right in this area. People come through here driving too fast. Something needs to be done. This is a dangerous street," he said.

Florida Taylor knows, first hand, the dangers of living alongside a busy, multilaned street. She lives about 1-1/2 blocks west of the Summerhill and MLK intersection.

"I had people come through my fence. They started right up there (at the intersection) and ended up tearing down my fence and taking out my rose bushes. They weren't far from running into the house next door. They come down through here going too fast. It's dangerous living here. But this is a family home. It's been here about 30 years. I don't want to leave it," she said.

Texarkana, Texas, police Public Information Officer Sgt. Aaron Brower said Nelson was cited for disregard of a red light.

Published: 04/15/2014

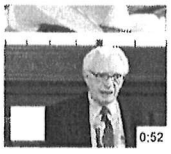

Journalists Awarded Pulitzer for Snowden Reports
The Washington Post and The Guardian won the Pulitzer...

Obama Remembers Kansas Shooting Victims
President Barack Obama on Monday honored those killed...

Weather

Weather Forecast | Weather Maps | Weather Radar

Leave a Reply

0 Comments Texarkana Gazette.com Login

Sort by Best Share Favorite

Start the discussion

From Around the Web ADVERTISEMENT

Controversy Over New Skinny Pill. Celeb Dr calls it "the newest, fastest, fat buster."

Shop Brilliant Earth's beyond conflict free diamond rings, antique rings, and fine jewelry!

'Warren Buffett Indicator' Signals Collapse in Stock Market

Time is running out to apply for this Texas program to eliminate your debt.

Find out the Unbelievable Price Ranges for the Top 10 Most Expensive Dogs in the World.

Featured Business

LearningRx
5602 Richmond Road, Richmond Moores Crossing, Suite 104
Texarkana, TX 75503
(903) 838-0303
Read more about this business
Visit Website / View Map

Business Directory

Search Local Businesses Go

- Texarkana Auto Sales
- Texarkana Banking
- Texarkana Beauty Care
- Texarkana Dentists
- Texarkana Florists

Attachment: Susie Moss Docs 062314 (1142 : Susie Moss Documents (6/23/14 mtg))

Subject: US Hwy 83 / US Hwy 67 – Shamrock, TX

From: Susie Moss (susiemoss92623@yahoo.com)

To: lance.simmons@txdot.gov;

Date: Monday, April 7, 2014 10:19 AM

Good morning,

As I have traveled, I have mainly been on Interstate so the only example I have for TX at this point is the referenced highways through Shamrock, TX w/a 30 mile an hour speed through Shamrock.

As I have traveled through NM, AZ - have gone through several towns that have 30-35 mile an hour speeds through town and residential areas on the US highways.

I hope you have been checking on other areas and find that Hwy 67 should be between 30-35 miles in the residential 4.5 blocks of Texarkana.

Thanks, Susie

Attachment: Susie Moss Docs 062314 (1142 : Susie Moss Documents (6/23/14 mtg))

Subject: Martin Luther Kin Street Speed

From: Susie Moss (susiemoss92623@yahoo.com)

To: lance.simmons@txdot.gov;

Date: Thursday, May 29, 2014 5:19 PM

Dear Mr. Simmons:

It has been a little time since I last wrote or heard from you. I noticed the other day while traveling from Arkansas to Texas (I'm not on that side very often) via Hwy 67 / 9th St. on Arkansas and MLK on Texas side. The speed in Arkansas for 67 is 35 miles an hour. I do not understand why it has been raised to 40/45 on the Texas side.

I believe that it is very dangerous to come over the viaduct on Hwy 67 going west into a neighborhood/residential area. As the speed is allowed to increase up the viaduct...a car can't really see what is on the other side until...it may be too late.

I would greatly appreciate the speed limit reviewed considering it is 35 miles in Arkansas and there are many (I have sent you a list) of towns in Texas that the speed is 30 / 35 miles an hour on highways.

I know several of the neighbors feel the same way. Please for the safety of children, adults, animals, and property - revamp the speed to a reasonable and safe limit = 30 / 35 miles per hour for the residential/neighborhood portion of MLK.

Sincerely,

Susie C. Moss
Resident on Hwy 67W / 8th Street / MLK Blvd.

I

Attachment: Susie Moss Docs 062314 (1142 : Susie Moss Documents (6/23/14 mtg))

Version: B

Briefing Sheet

Update Date: 7/5/2014 1:09 PM

Lead Department: City Secretary **Action Officer:** Jennifer Evans, City Secretary

Subject: Shaun Dierksen documents submitted at June 23, 2014 council meeting. (2014-082)

Updates/History of Briefing:

(Insert Date Here):
(Insert Text Here) or Select, Delete this and all text with parentheses and say "NOT APPLICABLE"

Executive Summary and Background Information:

Potential Options:

- List or "None"
-

Fiscal Implications:

(Insert Text Here)

Staff Recommendation:

(Insert Text Here)

Advisory Board/Committee Review:

(Advisory Board/Committee Name OR say "NONE")

Board/Committee Recommendation:

(Insert Date Here):
(Insert Text Here or say "NOT APPLICABLE")

Advisory Board/Committee Meeting Date and Minutes:

(Insert Minutes Here) or Select, Delete this and all text in this area and say "NOT APPLICABLE"

Attachments

a. Dierksen 2014-082 062314 (PDF)

2014-082

shaun dierksen

From: mary lou thornton [lou62963@gmail.com]
Sent: Wednesday, May 28, 2014 3:38 PM
To: sdierksen@dierksenhospice.com
Subject: Property at 22 Meadow lane

Royce and I talked at length after you and your wife left. We have since spoken to Mrs. Zacha, Jim and Peggy Whiteside, and Tim and Tammie Wann.

I realized Royce's quietness while you were here as his being in thought about the options. We now consider that if you follow through with your designs to make the landscaping better, put up an effective and attractive privacy fence, and direct the comings and goings of your staff from the Summerhill Rd. or Mall Drive Rd. behind the house, this might be a better scenario than our concern over what type of people might buy the house if it remains on the market.

Therefore, we are not going to contest the rezoning. Mrs. Zacha will follow our decision. I gave your number to both the Wann's and the Whiteside's so they can contact you if they have further questions. I trust it was ok for me to share your contact information.

Mary Lou Thornton
903-277-7876

Attachment: Dierksen 2014-082 062314 (1143 : Shaun Dierksen Docments (6/23/14 mrtg))

To whom it may concern:

As owners of #22 Meadow Ln in Texarkana, TX, we fully support Mr. Dierksen and his plan to change the zoning for this property.

Mr. Dierksen has signed a contract with us to buy our property at #22 Meadow. We met our neighbors at #20 Meadow and have determined that this property is already being used as a Group Home – the owner of the Group Home is ***Evergreen Life Services****. The number of cars coming and going from the established Group Home would seem to indicate similar traffic you would come to expect from an ordinary office building. Mr. Dierksen has intentions of using this property for commercial purposes and the specific zoning is for an Office.*

#22 Meadow is ideal to be used as a commercial property because it is located right off Summerhill Road where several office buildings are located and the rear of the property faces Realtor Road where a number of offices are located as well. There is a Convenience Store/Gas Station across Summerhill Road, and SONIC Restaurants is planning to build next to the Convenience Store/Gas Station in the near future so a large amount of commercial influence is evident in this area.

Shaun Dierksen has our support in changing the zoning from Single Family Residential to Commercial Office Building and proceeding with his plans. We fully support economic growth for Texarkana and applaud Mr. Dierksen for his endeavors.

Jim Richey

Jim Richey

Rhonda Richey

Rhonda Richey

Attachment: Dierksen 2014-082 062314 (1143 : Shaun Dierksen Docments (6/23/14 mrtg))

JIMMY ANDERSON CONSTRUCTION

P.O. Box 6303* Texarkana, TX 75505 * Website - jimmyandersonconstruction.com
Jimmy Anderson (903) 826-3849 * Email - jandersonproject@yahoo.com
Rick Cooney (903)691-0688 * Email - rcooney72@gmail.com

Improvements

Customer Name: Shaun Dierksen **Date:** 6/20/2014
Customer Address: 22 Meadow Ln.
City, State and Zipcode: Texarkana, Tex. 75503
Phone number: **Work/Cell:**
Project Name:

Proposed Work

Remove existing broken driveway and replace with new driveway leading to new parking lot at rear of building. Remove existing front concrete walkway and cover with new landscaping. Replace all existing wood fencing and chain link fencing with new 6' wood privacy fencing and extend fencing to front yard as a separation between properties. Replace all existing eaves and overhangs new painted hardi eaves and overhangs. Remove existing quadruple in front of house and replace with quadruple store front style window. Replace existing roofing. Install new hardi siding and brick or stone on garage. New paint on outside of building. These improvements could cost in the upwards of approximately $80,000.00.

Attachment: Dierksen 2014-082 062314 (1143 : Shaun Dierksen Docments (6/23/14 mrtg))

Attachment: Dierksen 2014-082 062314 (1143 : Shaun Dierksen Docments (6/23/14 mrtg))

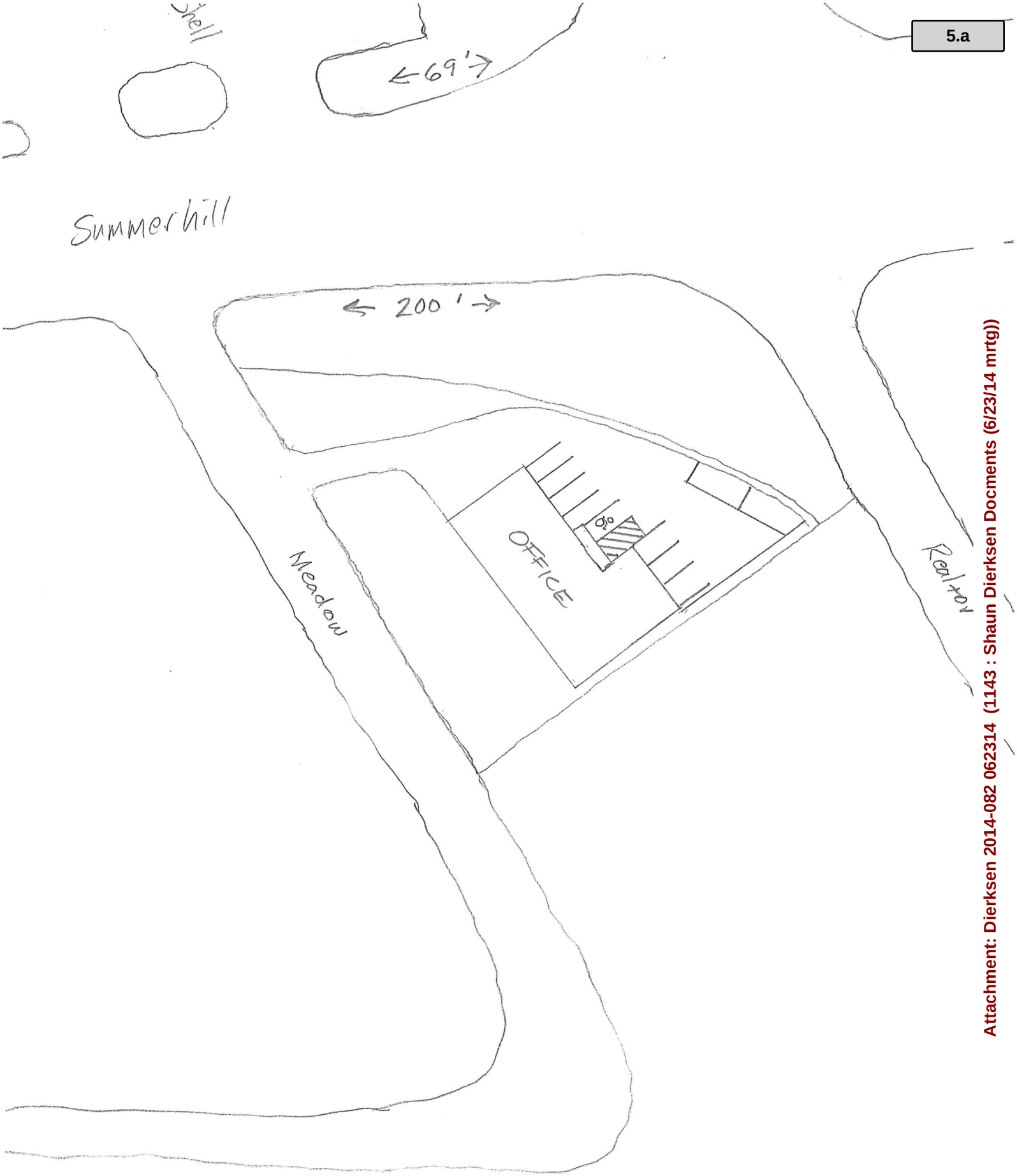

Attachment: Dierksen 2014-082 062314 (1143 : Shaun Dierksen Docments (6/23/14 mrtg))

Realtor
200'
69'
Meadow
Summer hill
Shell

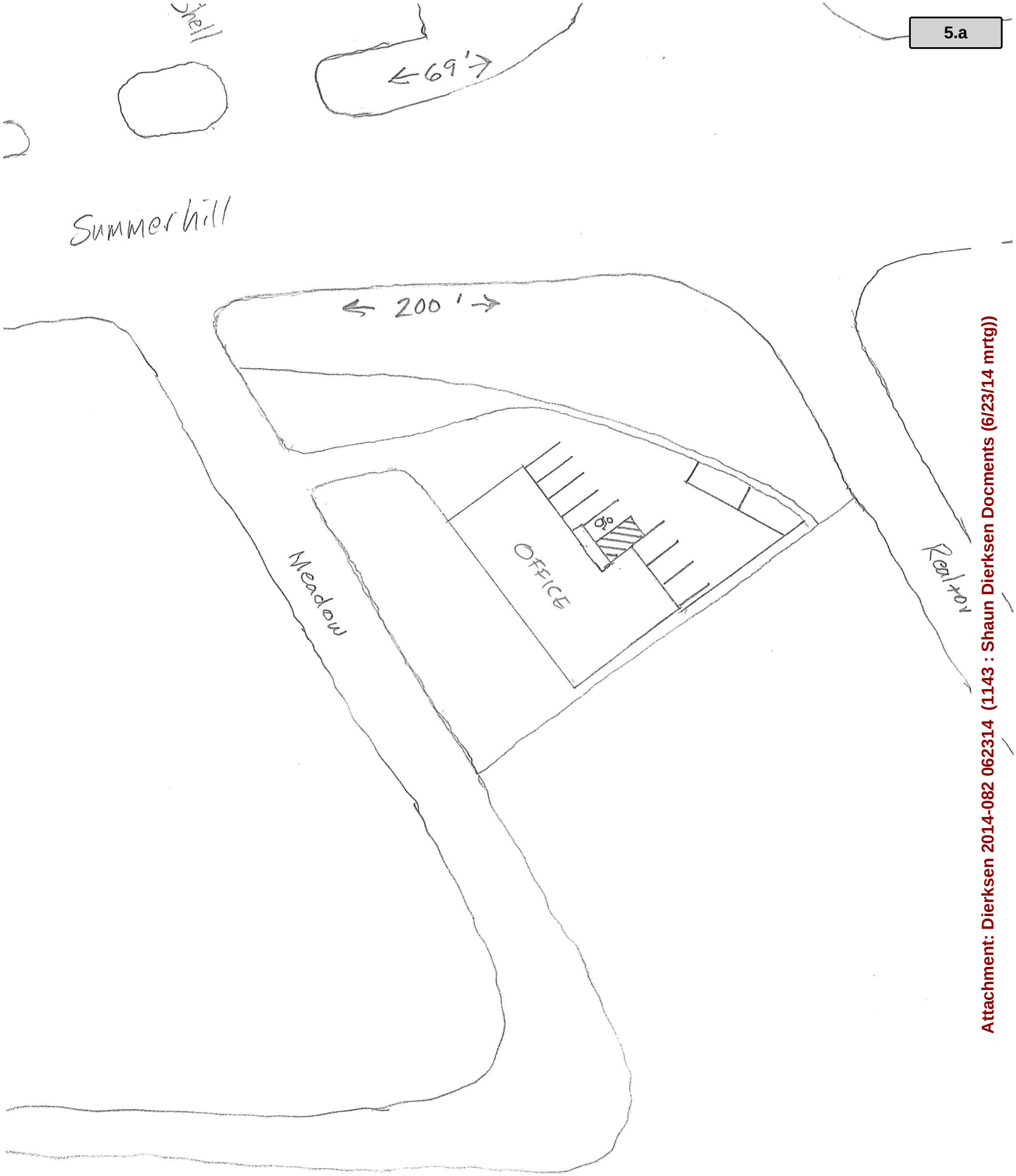

Attachment: Dierksen 2014-082 062314 (1143 : Shaun Dierksen Docments (6/23/14 mrtg))

Realtor
200'
69'
Meadow
Summer hill
Shell

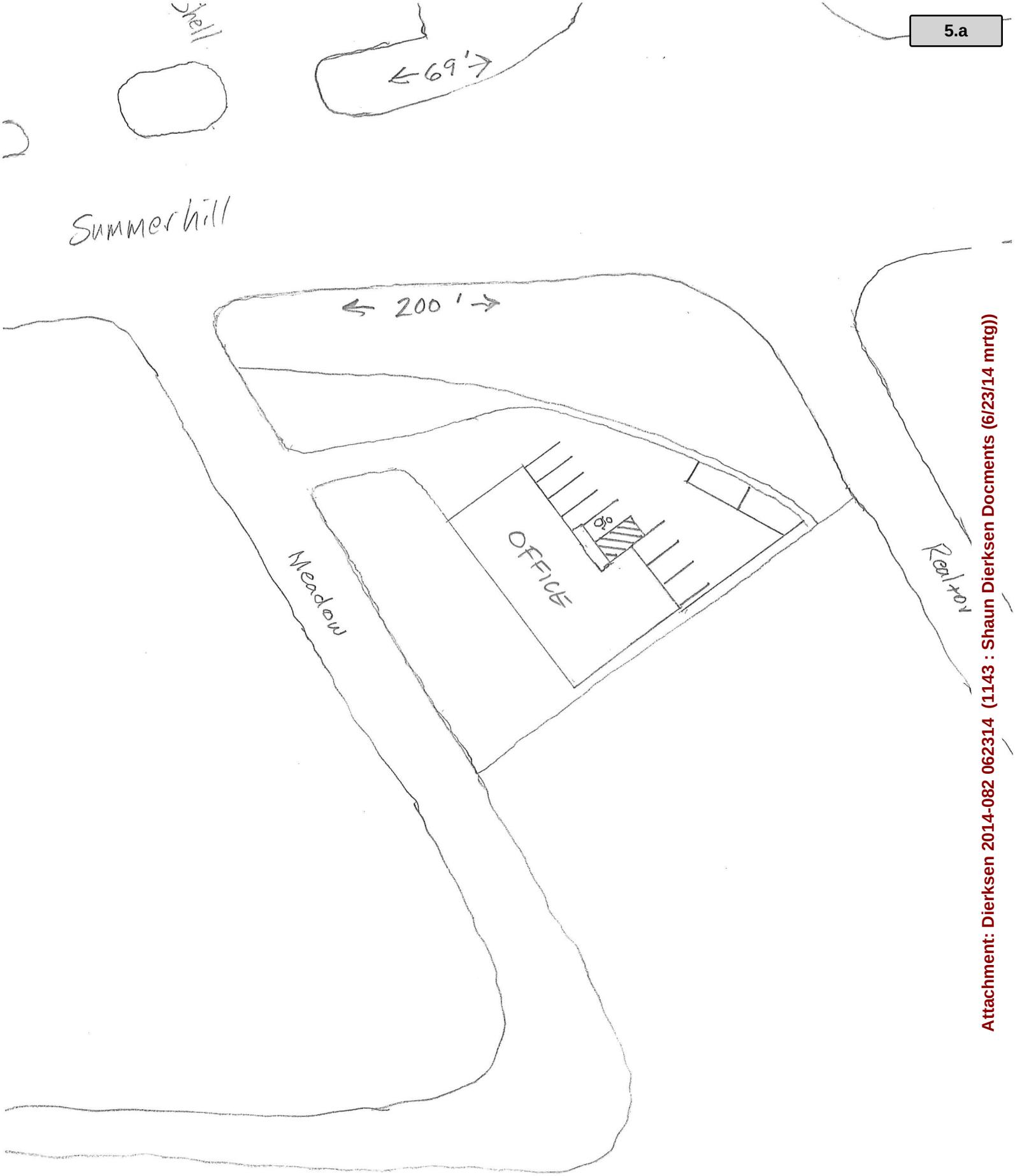

Attachment: Dierksen 2014-082 062314 (1143 : Shaun Dierksen Docments (6/23/14 mrtg))

Realtor
200'
69'
Meadow
Summer hill
Shell

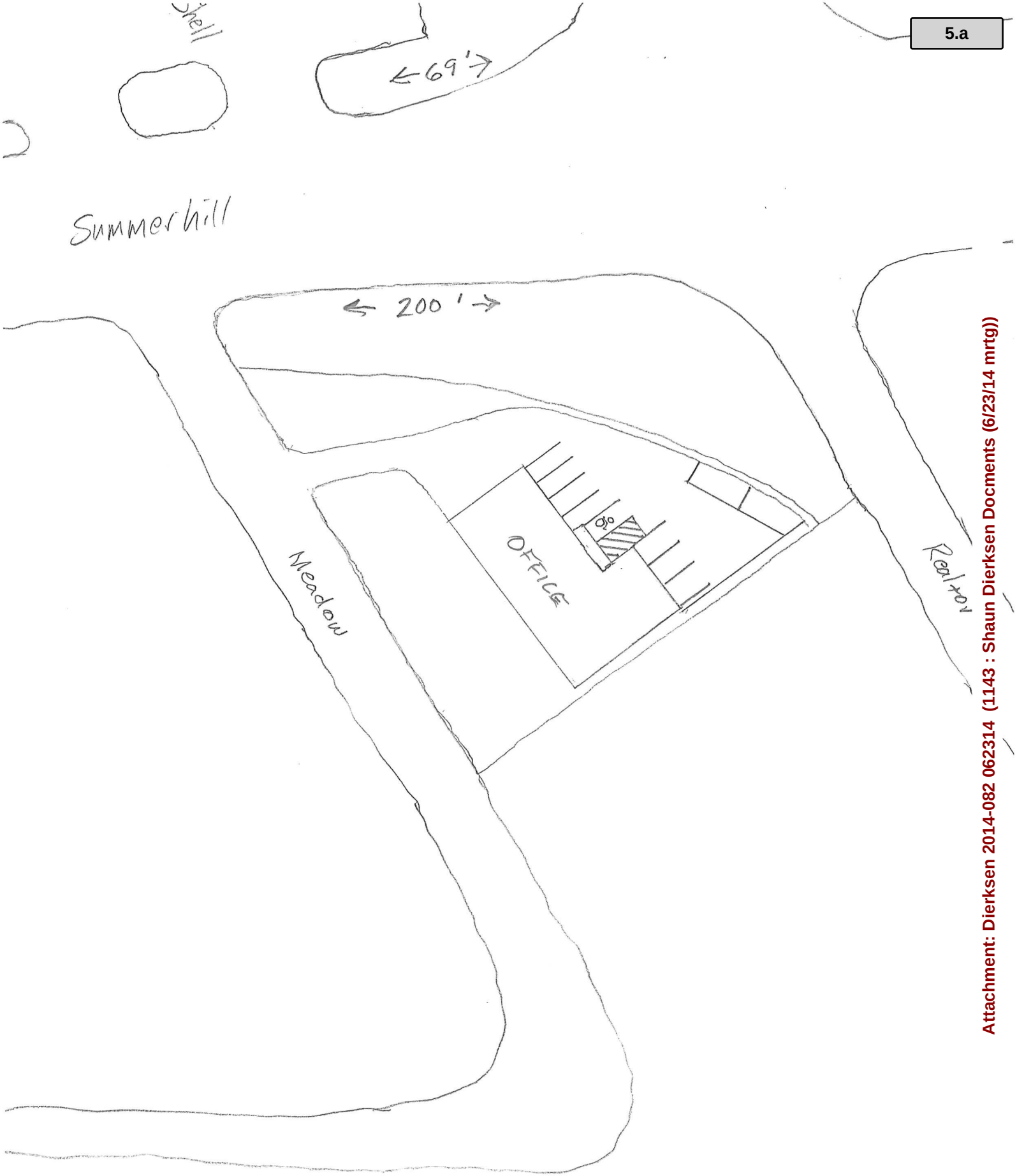

Attachment: Dierksen 2014-082 062314 (1143 : Shaun Dierksen Docments (6/23/14 mrtg))

Realtor
200'
69'
Meadow
Summer hill
shell

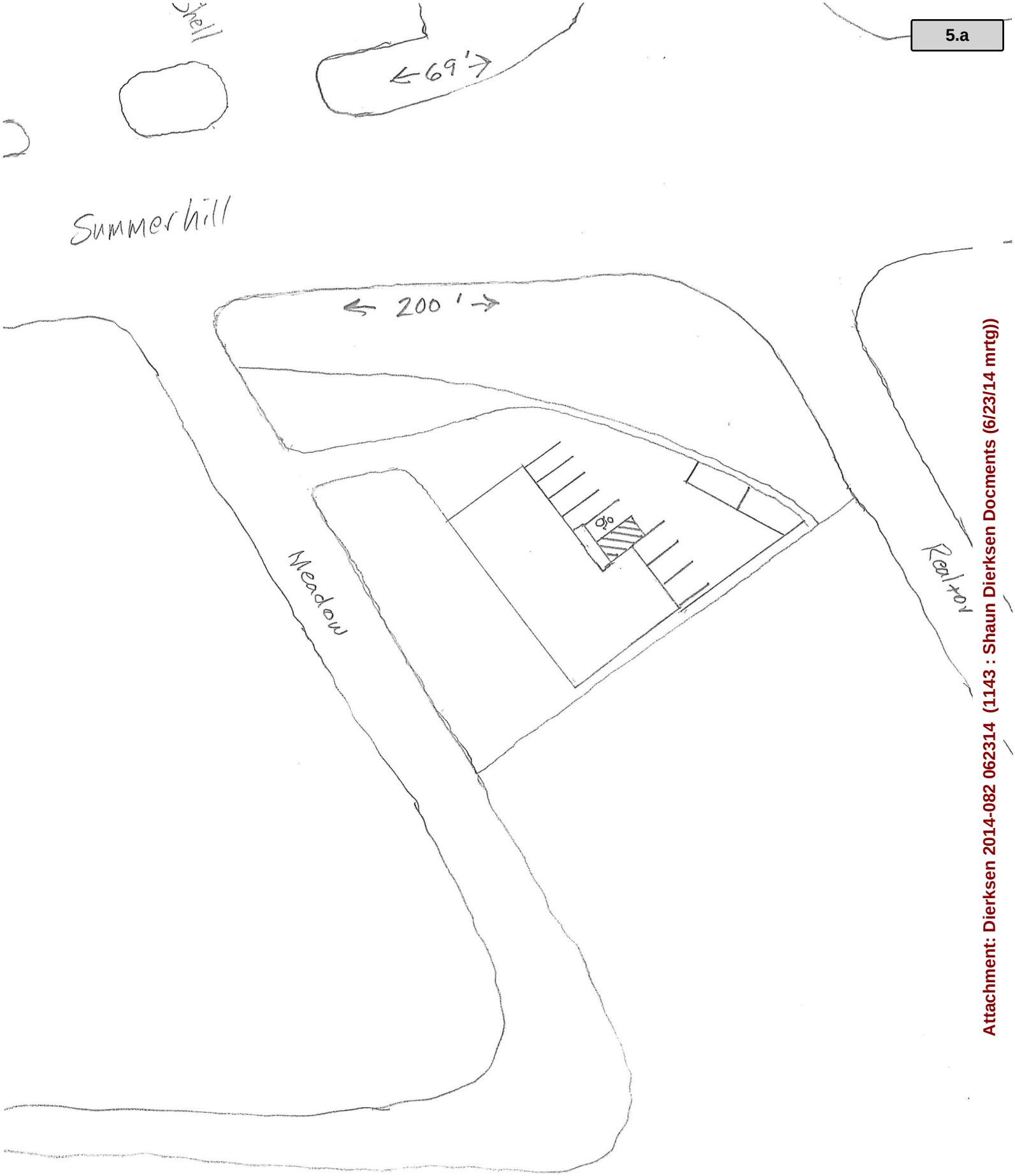

Attachment: Dierksen 2014-082 062314 (1143 : Shaun Dierksen Docments (6/23/14 mrtg))

Attachment: Dierksen 2014-082 062314 (1143 : Shaun Dierksen Docments (6/23/14 mrtg))

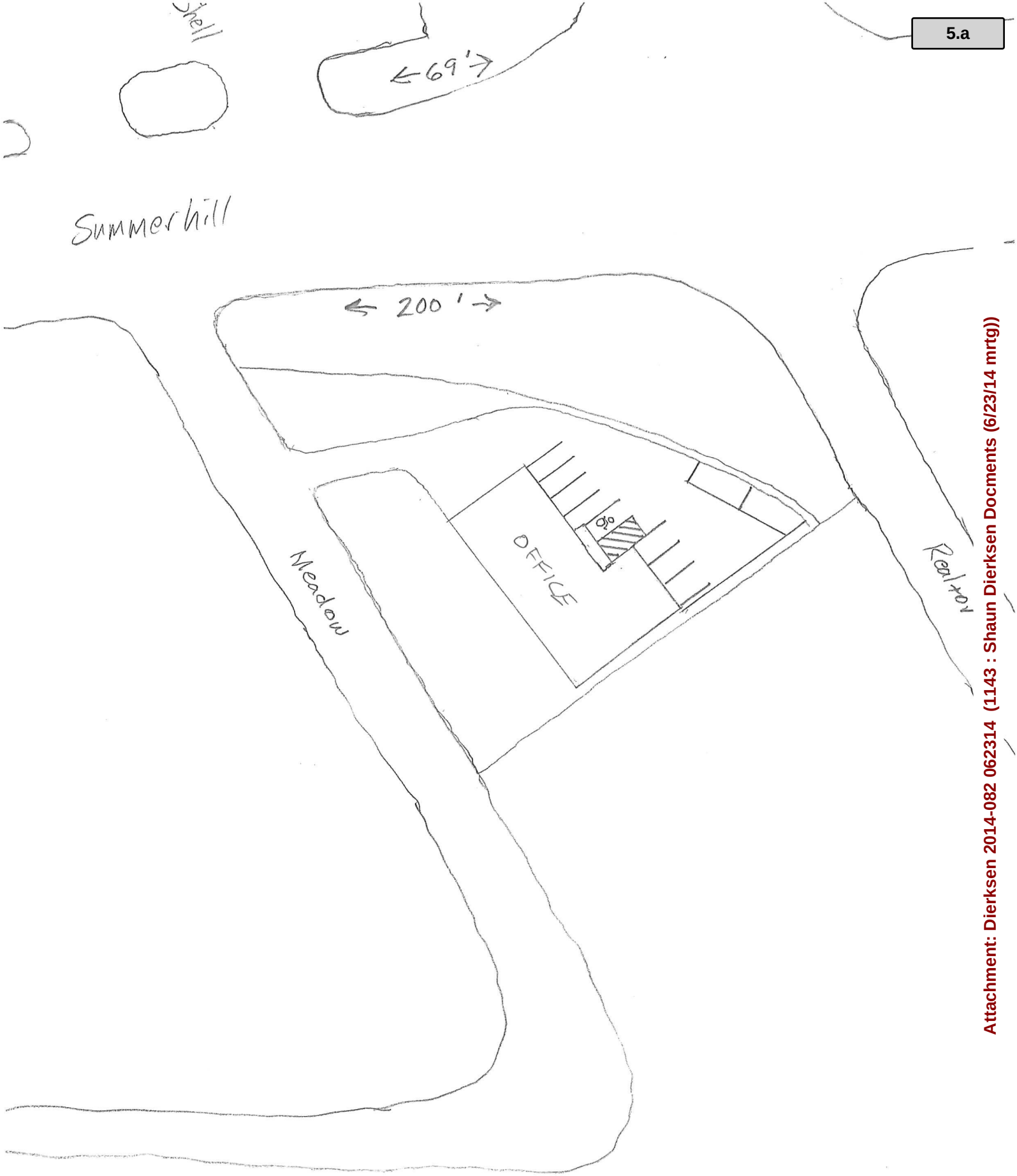

Attachment: Dierksen 2014-082 062314 (1143 : Shaun Dierksen Docments (6/23/14 mrtg))

Realtor
200'
69'
Meadow
Summer hill
Shell

City of Texarkana, Texas

Version: B

Briefing Sheet

Update Date: 5/22/2014 11:04 AM

Lead Department: Police **Action Officer:** Charles Kreidler,

Subject: Ordinance No. 2014-066 approving and authorizing the reclassification of one Police Lieutenant position to a Police Sergeant position and authorizing assignment pay for the Police Department Chief of Staff.

Briefing:	7/14/2014	**Public Hearing:**	6/9/2014	**Second Briefing:**	June 23, 2014	**Council Vote:**	7/14/2014

Item Schedule
Schedule 1: Brief twice - vote once (six weeks)

Updates/History of Briefing:

Executive Summary and Background Information:

Executive Summary

With the resignation of Captain Danny Presley and the Promotion of Lieutenant Charles Kreidler to the vacated "appointed" Captain's position, the Police Department is recommending the reclassification of the vacant Police Lieutenant's position (formerly held by Captain Kreidler) to that of a Police Sergeant.

This reclassification will be the first step in restructuring the command structure of the Support Services Division of the Police Department. The second facet of restructuring allows the Chief of Police to administratively assign one of the incumbent Captains additional responsibilities as Chief of Staff. The Chief of Staff will have direct command of the Support Services Division and additional oversight of the other operational areas within the Police Department. The restructuring effort will provide the department a tighter span of control and enhance communications, continuity and accountability among and between line officers, supervisors and commanders.

Background

In the coming weeks, the police department will begin to transition away from our current four divisions to a three division configuration that will tighten the span of control and increase accountability. The existing Uniformed Services Division of the Department will maintain patrol and traffic operations. The existing Support Services Division will maintain its current tasks and inherit all operations from the Investigative Services Division and the POP Team from the Administrative Services Division. The Investigative Division will be eliminated and the Administrative Division will be limited to the Chief of Police, Office of Professional Responsibility/City Marshal and Department Administrative Coordinator including some shared budgetary expenditures that cross divisional lines.

The changes, as proposed, would eliminate the need for a Lieutenant in the position of Community Liaison as those duties have been absorbed by the new Neighborhood Area Coordinators that were appointed in 2013. Maintaining a Lieutenant in the current position would be a duplication of effort that does not meet the fiscal objectives of the Department. The move of the Investigative Services Division to Support Services raises a need for a first line

supervisor of detectives in the form of an additional Police Sergeant. The reclassification of the unfilled Police Lieutenant's position to a Sergeant would realize a budget savings while meeting the supervisory needs of the division and department.
The Texas Local Government Code - Civil Service statute requires that the governing body of a municipality establish the number of positions in the available police classifications (i.e. Police Officer, Sergeant, Lieutenant, and Captain). Therefore, the reclassification of a Police Lieutenant to a Police Sergeant would require approval of the council through an ordinance. As presented here, the proposed ordinance would eliminate one of the seven Police Lieutenant's positions for a new total of six, and increase the Police Sergeant positions from twelve to thirteen.

_____

In an effort to add further accountability to the restructuring of divisions, the Chief of Police will administratively assign an incumbent Captain to serve as a Chief of Staff. The Chief of Staff will report directly to the Chief of Police and in addition to divisional responsibilities, will have fiscal and operational oversight authority over personnel and missions of the other Police Department Divisions, provide coordination and guidance on all major department projects, ensure department wide follow through on key decisions, monitor staff assignments for completion, and have multi-divisional budgetary review authority and responsibility. Since the duties of the Chief of Staff will be in addition to normal divisional responsibilities, the Chief of Police is recommending additional compensation in the form of assignment pay in an amount of $250.00 per month.
The statutory vehicle for assignment pay is found in the Civil Service Statute of the Texas Local Government Code. The code specifically states:

> *b) The governing body of a municipality may authorize assignment pay for fire fighters and police officers who perform specialized functions in their respective departments.*
> *(c) The assignment pay is in an amount and is payable under conditions set by ordinance and is in addition to the regular pay received by members of the fire or police department.*

Potential Options:

-
-

Fiscal Implications:

These structural modifications are expected to realize a $25,000 cost reduction in FY 2014-15.

Staff Recommendation:

(Insert Text Here)

Advisory Board/Committee Review:

None

Board/Committee Recommendation:

(Not Applicable)

Advisory Board/Committee Meeting Date and Minutes:

Not Applicable

City of Texarkana, Texas

Attachments

a. Goals and Perspectives (DOCX)
b. Organizational Chart 12-2013(PDF)
c. Organization Chart July 2014 (PDF)
d. Ordinance 2014-066 (DOC)

Staff Coordination

Police	Dan Shiner	Department Head Review	Completed	05/13/2014 10:36 AM
Public Information Officer	Lisa Thompson	PIO Review	Completed	05/13/2014 10:36 AM
City Manager	John Whitson	City Manager Review	Completed	05/13/2014 10:50 AM
City Council	Pam Burns	Meeting	Completed	06/18/2014 8:58 AM

Meeting History

05/27/14	City Council	MOVED FORWARD	Next: 06/09/14
06/09/14	City Council	MOVED FORWARD	Next: 06/23/14
06/23/14	City Council	MOVED FORWARD	Next: 07/14/14

City of Texarkana, Texas

Developing Perspectives and Goals Pending Approval by the City Council:

Perspectives	Goals
Serve the Community	☐ Promote an Environmentally Sensitive & Livable Community ☐ Provide a Safe Community ☑ Deliver Quality Services ☐ Foster a Healthy Community
Run the Operations	☐ Enhance Community Preparedness & Responsiveness ☐ Maximize Partnership Opportunities ☐ Provide Courteous & Responsive Customer Service ☐ Model a Positive City Image ☑ Deliver Efficient Services ☐ Cultivate Community Involvement & Access
Manage the Resources	☐ Maintain Fiscal Strength ☑ Maximize Utilization & Resources ☐ Invest in Infrastructure & Transportation
Develop Personnel	☐ Develop a Skilled & Diverse Workforce ☐ Create a Positive & Rewarding Work Culture

Perspectives and Goals Additional Comments:

See background section of Executive Summary

Resource Impact:

Staff time required if item is approved:	Low

Other Potential Impacts:

"NONE APPLICABLE"

Public Information Plan:

☐	Newspaper Notice (Required by Statute)	☐	Public Hearing (Required by Statute)
☐	Public Forum/Input Session	☐	Press Release
☐	E-News Distribution	☐	Website Notice
☐	Social Media (Twitter, Facebook, etc.)	☐	Special Mailing
☐	Flyers Posted	☐	Banners Posted
☐	Survey	☐	Automated Phone Call
☐	None Required	☐	

Other:

Attachment: Goals and Perspectives (1119 : Ord. No. 2014-066 Civil Service Position Reclassification and Assignment Pay Consideration)

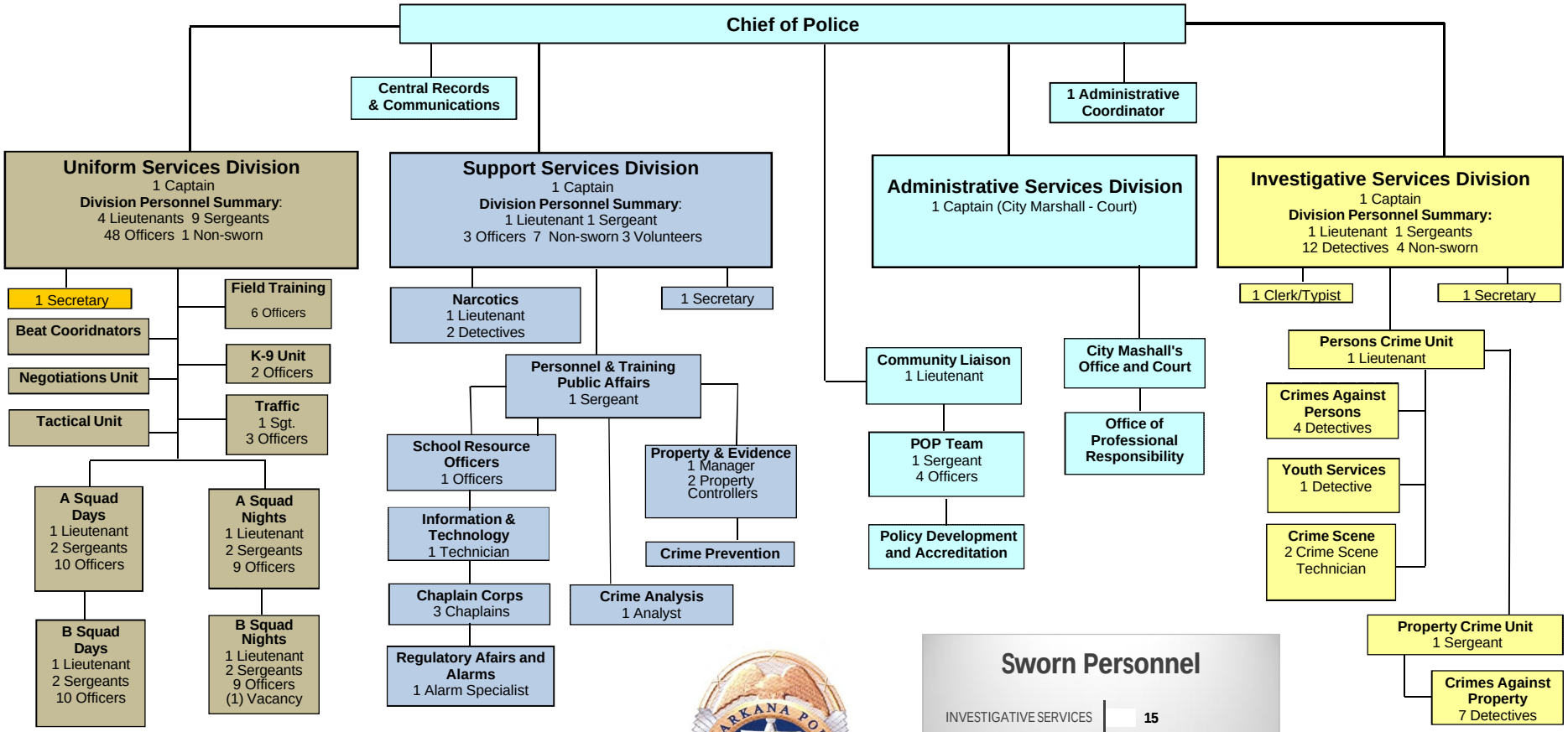

Department Personnel Summary

Authorized Positions:
Sworn 91; Non-sworn 13; Volunteers 3

Civil Service Frozen Positions 5

Effective 1-1-2014

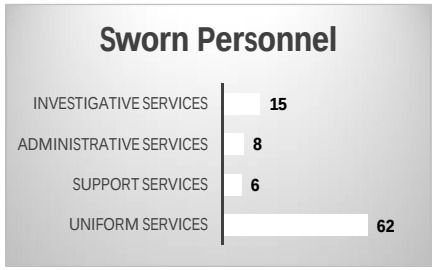

Attachment: Organizational Chart 12-2013 (1119 : Ord. No. 2014-066 Civil Service Position

Texarkana Texas Police Department
Organization Chart

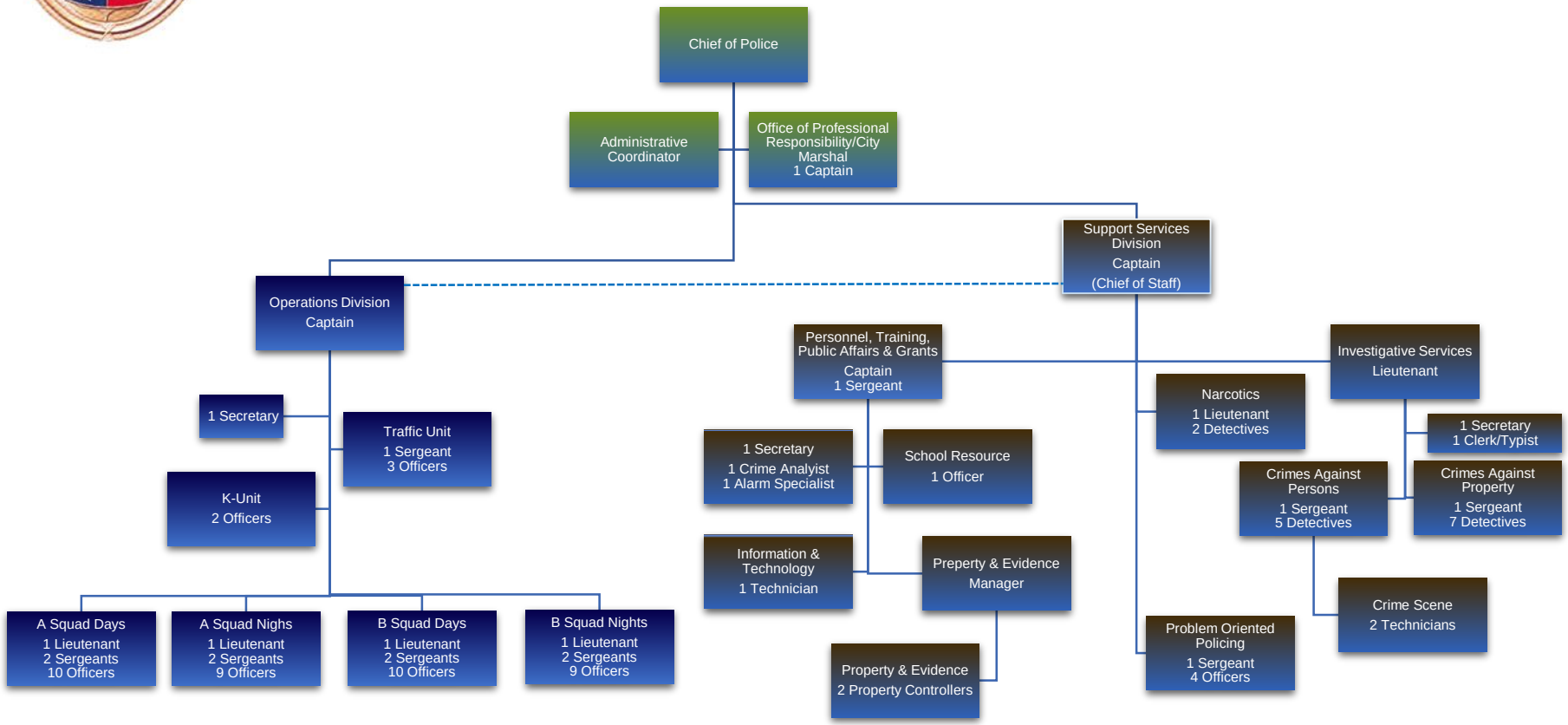

Department Personnel Summary

Authorized Positions:
Sworn 91; Non-sworn 13; Volunteers 3
Civil Service Frozen Positions 5

Effective July 2014

Attachment: Organization Chart July 2014 (1119 : Ord. No. 2014-066 Civil Service Position

ORDINANCE NO. 2014 - 066

AN ORDINANCE OF THE CITY COUNCIL OF THE CITY OF TEXARKANA, TEXAS, APPROVING AND AUTHORIZING THE RECLASSIFICATION OF ONE POLICE LIEUTENANT POSITION TO A POLICE SERGEANT POSITION AND AUTHORIZING ASSIGNMENT PAY FOR THE POLICE DEPARTMENT CHIEF OF STAFF; AND ESTABLISHING AN EFFECTIVE DATE.

WHEREAS, by Ordinance 7-48 dated May 25, 1948 the City of Texarkana, Texas adopted the Fireman's and Policeman's Civil Service Law as then found in Article 1269m, Texas Revised Civil Statutes, now codified at Texas Local Government Code, Section 143.001, et seq,; and

WHEREAS, Local Government Code, Section 143.021(a) states the commission shall provide for the classification of all police officers: and

WHEREAS, the municipality's governing body shall establish the classifications by ordinance, including the number of positions in each subsequent classification; and

WHEREAS, by ordinance 143-77 the City Council provided for a comprehensive redrafting of the Civil Service Classification System and authorized the number of positions within the Classification System; and

WHEREAS, there currently exists a need to amend the number of positions within the Classification System under ordinance 143-77 to accomplish restructuring of supervision for investigative personnel by including one additional Police Sergeant; and

WHEREAS, upon City Council approval the Classification System will be amended to increase the number of Police Sergeants from 12 to 13 while reducing the number of Police Lieutenants from 7 to 6; and

WHEREAS, the governing body of a municipality may authorize assignment pay for fire fighters and police officers who perform specialized functions in their respective departments with assignment pay in an amount and payable under conditions set by ordinance, in addition to the regular pay received by members of the fire and police departments; and

WHEREAS, the Chief of Police will administratively assign one incumbent Police Captain the additional duties of Department Chief of Staff with fiscal and operational oversight authority over personnel and missions of all Police Department Divisions, provide coordination and guidance on all major department projects, ensure department wide follow through on key decisions, monitor staff assignments for completion, and have multi-divisional budgetary review authority and responsibility; and

WHEREAS, upon City Council approval, assignment pay for the Captain administratively assigned as the Chief of Staff will be in the amount of $250.00 per month.

NOW, THEREFORE, BE IT ORDAINED BY THE CITY COUNCIL OF THE CITY OF TEXARKANA, TEXAS:

SECTION 1: That the reclassification of one (1) Police Lieutenant position to one (1) Police Sergeant position is hereby approved and authorized, and Section 3 of Ordinance 142-77 as last amended by Section 2 of Ordinance 069-03 is hereby amended so as to substitute a new "Exhibit to Section 3" which shall read in its entirety as follows:

Exhibit to Section 3

CLASSIFICATION	AUTHORIZED POSITIONS
Police Captain	4
Police Lieutenant	6
Police Sergeant	13
Police Officer	73
Total	96

SECTION 2: The addition of assignment pay in the amount of $250.00 per month for assignment of a Captain as the Police Department Chief of Staff is hereby approved and authorized in accordance with the Texas Local Government Code 143.042.

SECTION 3: The purpose and intent of this Ordinance on the Civil Service Classification system of the Texarkana Texas Police Department is to reclassify one Police Lieutenant Position to that of a Police Sergeant Position.

SECTION 4: It is further provided that in case a section, clause, sentence or part of this Ordinance shall be deemed or adjudged by a court of competent jurisdiction to be invalid, then such invalidity shall not affect, impair, or invalidate the remainder of this Ordinance.

SECTION 5: That this Ordinance shall be in full force and effect from and after its passage and approval.

PASSED AND APPROVED in Regular Council Session on this the 14th day of July, 2014.

ATTEST:

_____ _____

JENNIFER EVANS, CITY SECRETARY BOB BRUGGEMAN, MAYOR

Attachment: Ordinance 2014-066 [Revision 2] (1119 : Ord. No. 2014-066 Civil Service Position Reclassification and Assignment Pay

City of Texarkana, Texas

Version: C

Briefing Sheet

Update Date: 7/7/2014 3:08 PM

Lead Department: City Engineer **Action Officer:** Dusty Henslee,

Subject: Resolution No. 2014-076 authorizing the City Manager to pay invoice costs from Southwest Electric Cooperative Corporation for the relocation of overhead electric lines for the Phase IV TAMU East Approach Construction Project in an amount not to exceed Eighty-Two Thousand Two Hundred Forty and 11/100 Dollars ($82,240.11).

Briefing: 7/14/2014	**Public Hearing:**	**Second Briefing:**	**Council Vote:** 7/14/2014

Item Schedule
Schedule 2: Brief once - vote once (two weeks)

Updates/History of Briefing:

Not Applicable

Executive Summary and Background Information:

This invoice is to pay for the relocation of the existing overhead electric lines running along Phase IV TAMU East Approach Construction Project. Prior to City obtaining the Right of Way to build the new street, Southwest Arkansas Electric Cooperative Corporation had existing overhead electric lines along the route where the new street will be constructed. The relocated electric lines will all be underground.

We received this invoice on 5/28/14.

Potential Options:

- None
-

Fiscal Implications:

Invoice is for $82,240.11. Funding for this will be from the 2009 Bond Fund.

Staff Recommendation:

Staff recommends approval.

Advisory Board/Committee Review:

None

Board/Committee Recommendation:

Not Applicable

Advisory Board/Committee Meeting Date and Minutes:

Not Applicable

City of Texarkana, Texas

Attachments

a. Goals and Perspectives (DOCX)
b. Resolution No. 2014-076 (DOC)
c. Exhibit A-Invoice (PDF)

Staff Coordination

Public Works Department	Kyle Dooley	Department Head Review	Completed	06/10/2014 1:52 PM
Municipal Services and Public Works	Shirley Jaster	MS & PW Review	Completed	06/10/2014 3:20 PM
Finance Department	Charlie Bassett	Finance Review	Completed	06/10/2014 5:01 PM
Public Information Officer	Lisa Thompson	PIO Review	Completed	06/10/2014 5:05 PM
City Manager	John Whitson	City Manager Review	Completed	06/17/2014 4:56 PM
City Council	Jennifer Evans	Meeting	Completed	06/25/2014 3:07 PM

Meeting History

06/23/14 City Council MOVED FORWARD Next: 07/14/14
Kyle Dooley briefed this item.

City of Texarkana, Texas

Developing Perspectives and Goals Pending Approval by the City Council:

Perspectives	Goals
Serve the Community	☑ Promote an Environmentally Sensitive & Livable Community ☐ Provide a Safe Community ☑ Deliver Quality Services ☐ Foster a Healthy Community
Run the Operations	☐ Enhance Community Preparedness & Responsiveness ☐ Maximize Partnership Opportunities ☐ Provide Courteous & Responsive Customer Service ☐ Model a Positive City Image ☑ Deliver Efficient Services ☐ Cultivate Community Involvement & Access
Manage the Resources	☐ Maintain Fiscal Strength ☐ Maximize Utilization & Resources ☑ Invest in Infrastructure & Transportation
Develop Personnel	☐ Develop a Skilled & Diverse Workforce ☐ Create a Positive & Rewarding Work Culture

Perspectives and Goals Additional Comments:

NONE

Resource Impact:

Staff time required if item is approved:	No Additional

Other Potential Impacts:

NONE APPLICABLE

Public Information Plan:

☐	Newspaper Notice (Required by Statute)	☐	Public Hearing (Required by Statute)
☐	Public Forum/Input Session	☐	Press Release
☐	E-News Distribution	☐	Website Notice
☐	Social Media (Twitter, Facebook, etc.)	☐	Special Mailing
☐	Flyers Posted	☐	Banners Posted
☐	Survey	☐	Automated Phone Call
☑	None Required	☐	

Other:

Attachment: Goals and Perspectives (1132 : Res. No. 2014-076-Pay Invoice for relocating eletrical lines for Phase IV TAMU East Approach)

Attachment: Resolution No. 2014-076 [Revision 4] (1132 : Res. No. 2014-076-Pay Invoice for relocating eletrical lines for Phase IV TAMU East

RESOLUTION NO. 2014 - 076

A RESOLUTION OF THE CITY COUNCIL OF THE CITY OF TEXARKANA, TEXAS, AUTHORIZING THE CITY MANAGER TO PAY INVOICE COSTS FROM SOUTHWEST ARKANSAS ELECTRIC COOPERATIVE CORPORATION OF TEXARKANA, ARKANSAS FOR THE RELOCATION OF OVERHEAD ELECTRIC LINES FOR THE PHASE IV TAMU EAST APPROACH CONSTRUCTION PROJECT IN AN AMOUNT NOT TO EXCEED EIGHTY-TWO THOUSAND TWO HUNDRED FORTY AND 11/100 DOLLARS ($82,240.11); AND ESTABLISHING AN EFFECTIVE DATE.

WHEREAS, the invoice from Southwest Arkansas Electric Cooperative Corporation was received on May 28, 2014, which includes the cost to relocate the overhead electric lines for the construction of the Phase IV TAMU East Approach Construction Project; and

WHEREAS, the invoice from Southwest Arkansas Electric Cooperative Corporation of Texarkana, Arkansas (Exhibit "A") is in an amount not to exceed EIGHTY-TWO THOUSAND TWO HUNDRED FORTY AND 11/100 DOLLARS ($82,240.11); and

WHEREAS, funds are available for this service through the 2009 bond fund.

NOW, THEREFORE, BE IT RESOLVED BY THE CITY COUNCIL OF THE CITY OF TEXARKANA, TEXAS:

SECTION 1: That the invoice submitted by Southwest Arkansas Electric Cooperative Corporation for the relocation of overhead electric lines for the construction of Phase IV TAMU East Approach (Exhibit "A"), be and is hereby accepted.

SECTION 2: That the City Manager be and is hereby authorized to pay the invoice from Southwest Arkansas Electric Cooperative Corporation in an amount not to exceed EIGHTY-TWO THOUSAND TWO HUNDRED FORTY AND 11/100 DOLLARS ($82,240.11).

SECTION 3: That this Resolution shall be in full force and effect from and after its passage and approval.

PASSED AND APPROVED in Regular Council Session on this the 14th day of July, 2014.

ATTEST:

_____ _____

JENNIFER EVANS, CITY SECRETARY BOB BRUGGEMAN, MAYOR

SOUTHWEST ARKANSAS ELECTRIC
COOPERATIVE CORPORATION
P.O. BOX 1807
TEXARKANA, ARKANSAS 75504-1807

INVOICE: 127

Invoice Date: 05/28/2014
Terms: NET DUE
Due Date: 05/28/2014
Amount Due: $ 82,240.11

CITY OF TEXARKANA TEXAS
919 ELM STREET
TEXARKANA TX 75504

Account: 109
Description: AID TO CONSTRUCTION: SUMMERHILL RD TO SHILLINGS LN. PHASE IV, WO # 2012-0925 RF

Page 1 of 1

DESCRIPTION	QUANTITY	UOM	UNIT PRICE	AMOUNT	TAX
CATALOG ITEM: AID TO CONSTRUCTION RETIRE THREE PHASE POWER LINE (LABOR)	1.000	EA	7,493.3100	7,493.31	
CATALOG ITEM: AID TO CONSTRUCTION CONSTRUCT 3 PHASE POWER LINE UG	1.000	EA	25,587.9800	25,587.98	
CATALOG ITEM: AID TO CONSTRUCTION THREE PHASE POWER LINE (MATERIAL)	1.000	EA	49,158.8200	49,158.82	

MESSAGES

RETURN BOTTOM PORTION WITH PAYMENT

Subtotal:	$ 82,240.11
Tax:	$ 0.00
Total:	$ 82,240.11
Amount Paid:	$ 0.00
Amount Due:	$ 82,240.11

SOUTHWEST ARKANSAS ELECTRIC
COOPERATIVE CORPORATION
P.O. BOX 1807
TEXARKANA, ARKANSAS 75504-1807

Account:	109
Invoice:	127
Due Date:	05/28/2014
Amount Due:	$ 82,240.11
Amount Of Payment:	_____

CITY OF TEXARKANA TEXAS
919 ELM STREET
TEXARKANA TX 75504

Remit To:

SOUTHWEST ARKANSAS ELECTRIC
P. O. BOX 1807
TEXARKANA TX 75504-1807

Attachment: Exhibit A-Invoice (1132 : Res. No. 2014-076-Pay Invoice for relocating eletrical lines for Phase IV TAMU East Approach)

City of Texarkana, Texas

Version: B

Briefing Sheet

Update Date: 6/17/2014 1:42 PM

Lead Department: City Manager **Action Officer:** John Whitson, City Manager

Subject: Resolution No. 2014-077 for the appointment of Municipal Judge and approval of a two-year Employment Agreement.

Briefing: 7/14/2014	**Public Hearing:**	**Second Briefing:**	**Council Vote:** 7/14/2014

Item Schedule

Updates/History of Briefing:

NOT APPLICABLE

Executive Summary and Background Information:

Section 29.005 of the Government Code states, "The judge of a municipal court serves for a term of office of two years unless the municipality provides for a longer term pursuant to Article XI, Section 11, of the Texas Constitution. A municipal court judge who is not reappointed by the 91st day following the expiration of a term of office shall, absent action by the appointing authority, continue to serve for another term of office beginning on the date the previous term of office expired."

Judge Sherry Jackson's current appointment expires on the last of July 2014. Judge Jackson desires to be reappointed to another two-year term. Her annual salary is $78,280 and she is not seeking an increase in salary or any changes to her current City Council approved Compensation Agreement. I recommend and Judge Jackson concurs with changing section 4 of the agreement as follows:

Section 4 of the agreement currently states, "The City Council in collaboration with the City Manager shall evaluate and assess in writing the performance of the Municipal Judge at least once each year. The evaluation and assessment shall be in accordance with (1) specific written criteria for an individual action plan developed jointly by the City Manager and the Municipal Judge which shall be reasonably related to the duties of the Municipal Judge and (2) her performance with respect to achieving the goals and objectives of the action plan."

City Manager Whitson recommends a new Section 4 as follows, "The MUNICIPAL JUDGE, at least once annually, shall provide the City Council with a written report of her continuing education activities and any specific areas of interest related to her abilities to perform the full range of her court duties."

Potential Options:

- Approve the agreement as presented
- Take no action and the agreement renews automatically 91 days following it's approved term

Fiscal Implications:

Position is currently budgeted. There will not be any related extraordinary changes in costs related to this reappointment.

City of Texarkana, Texas

Staff Recommendation:

Approve the proposed appointment and Compensation Agreement

Advisory Board/Committee Review:

NONE

Board/Committee Recommendation:

NOT APPLICABLE

Advisory Board/Committee Meeting Date and Minutes:

NOT APPLICABLE

Attachments

a. Goals and Perspectives (DOCX)
b. 2014-077 RES Reappoint Municipal Court Judge (DOC)
c. 2014-077 ATTH 01 Municipal Judge Compensation Agreement 2014-2016 (DOC)
d. 2014-077 ATTH 02 Municipal Judge Compensation Agreement 2012-2014 (DOC)

Staff Coordination

City Manager	John Whitson	Department Head Review	Completed	06/17/2014 2:51 PM
City Attorney	Jeffery C. Lewis	Review	Completed	06/17/2014 4:41 PM
Municipal Judge	Jennifer Evans	Review	Skipped	06/23/2014 6:30 PM
Public Information Officer	Jennifer Evans	PIO Review	Skipped	06/23/2014 6:30 PM
City Manager	John Whitson	City Manager Review	Completed	07/03/2014 10:24 AM
City Council	Jennifer Evans	Meeting	Completed	06/25/2014 3:07 PM

Meeting History

06/23/14 City Council MOVED FORWARD Next: 07/14/14

City Manager Whitson briefed this item.

City of Texarkana, Texas

Developing Perspectives and Goals Pending Approval by the City Council:

Perspectives	Goals
Serve the Community	☐ Promote an Environmentally Sensitive & Livable Community ☐ Provide a Safe Community ☑ Deliver Quality Services ☐ Foster a Healthy Community
Run the Operations	☐ Enhance Community Preparedness & Responsiveness ☐ Maximize Partnership Opportunities ☑ Provide Courteous & Responsive Customer Service ☐ Model a Positive City Image ☐ Deliver Efficient Services ☐ Cultivate Community Involvement & Access
Manage the Resources	☐ Maintain Fiscal Strength ☑ Maximize Utilization & Resources ☐ Invest in Infrastructure & Transportation
Develop Personnel	☑ Develop a Skilled & Diverse Workforce ☑ Create a Positive & Rewarding Work Culture

Perspectives and Goals Additional Comments:

NONE

Resource Impact:

Staff time required if item is approved:	No Additional

Other Potential Impacts:

NONE APPLICABLE

Public Information Plan:

☐	Newspaper Notice (Required by Statute)	☐	Public Hearing (Required by Statute)
☐	Public Forum/Input Session	☐	Press Release
☐	E-News Distribution	☐	Website Notice
☐	Social Media (Twitter, Facebook, etc.)	☐	Special Mailing
☐	Flyers Posted	☐	Banners Posted
☐	Survey	☐	Automated Phone Call
☑	None Required	☐	

Other:

Attachment: Goals and Perspectives (1133 : Res 2014-077 Reappoint Judge Jackson as Municipal Judge)

RESOLUTION NO. 2014 - 077

A RESOLUTION OF THE CITY COUNCIL OF THE CITY OF TEXARKANA, TEXAS, APPOINTMENT OF JUDGE OF THE MUNICIPAL COURT FOR A TWO-YEAR TERM; FIXING THE SALARY FOR THE POSITION; AND ESTABLISHING AN EFFECTIVE DATE.

WHEREAS, the Charter of the City of Texarkana, Texas, requires that the Council elect a Municipal Judge each even year by a majority vote for a two-year term; and

WHEREAS, the City Charter requires that such individual shall have been a resident of the City of Texarkana, Texas, for at least one year preceding the appointment;

NOW, THEREFORE, BE IT RESOLVED BY THE CITY COUNCIL OF THE CITY OF TEXARKANA, TEXAS:

SECTION 1: That Sherry L. Jackson is deemed qualified and is hereby reappointed to serve as Judge of the Municipal Court of the City of Texarkana, Texas for a term of two years; and

SECTION 2: That the salary for the Municipal Judge shall be SEVENTY-EIGHT THOUSAND TWO HUNDRED EIGHTY AND NO/DOLLARS ($78,280) per annum; and

SECTION 3: That the Compensation Agreement listing other expense reimbursements, training requirements, and performance reporting is approved and made a part of this resolution hereto; and

SECTION 4: That the City Manager, on behalf of the City Council, is authorized and directed to execute the approved Compensation Agreement; and

SECTION 2: That this Resolution shall be in full force and effect from and after its passage and approval.

PASSED AND APPROVED in Regular Council Session on this the 14th day of July, 2014.

ATTEST:

_____ _____

JENNIFER EVANS, CITY SECRETARY BOB BRUGGEMAN, MAYOR

Attachment: 2014-077 RES Reappoint Municipal Court Judge [Revision 1] (1133 : Res 2014-077 Reappoint Judge Jackson as Municipal Judge)

Attachment: 2014-077 ATTH 01 Municipal Judge Compensation Agreement 2014-2016 [Revision 1] (1133 : Res 2014-077 Reappoint Judge

COMPENSATION AGREEMENT

THIS AGREEMENT is made and entered into by and between the City of Texarkana, Texas, a municipal corporation, (hereinafter referred to as the "CITY") and Sherry L. Jackson, (hereinafter referred to as "MUNICIPAL JUDGE").

WITNESSETH:

WHEREAS, CITY desires to employ the services of Sherry L. Jackson as the MUNICIPAL JUDGE of the City of Texarkana, Texas; and

WHEREAS, it is the desire of the City Council of the City of Texarkana, Texas, to provide certain compensation benefits, establish certain conditions of employment and to set working conditions of said MUNICIPAL JUDGE; and

WHEREAS, Sherry L. Jackson desires to accept employment as the MUNICIPAL JUDGE of the City of Texarkana, Texas;

NOW, THEREFORE, for and in consideration of the mutual covenants contained herein, and other good and valuable consideration, the receipt and sufficiency of which is hereby acknowledged and confessed, the parties agree as follows:

Section 1. Duties.

CITY hereby agrees to employ said Sherry L. Jackson as the MUNICIPAL JUDGE of said CITY to perform the functions and duties authorized under State law, the City Charter and City Ordinances, and to perform other legally permissible and proper duties and functions as the Council or City Manager shall from time to time assign.

Section 2. Term.

A. Sherry L. Jackson shall commence serving as the MUNICIPAL JUDGE on the 1st day of August, 2014, and continue serving under the terms of this contract through the last day of July, 2016. Nothing in this Agreement shall prevent, limit or otherwise interfere with the right of the City Council to terminate the services of the MUNICIPAL JUDGE at any time, with or without cause. Sufficiency of cause shall be solely within the discretion of CITY. Nothing contained within this Agreement shall be construed to confer an expectation of continued employment or a property interest therein.

B. Nothing in this Agreement shall prevent, limit or otherwise interfere with the right of the MUNICIPAL JUDGE to resign at any time from her position with the CITY.

C. MUNICIPAL JUDGE agrees to remain in the exclusive employ of CITY and to accept no other employment by another employer during the term of this Agreement. The term "employment" shall not be construed to include occasional teaching, writing, consulting, serving as legal counsel for issues unrelated to City business, or mediation performed on the MUNICIPAL JUDGE'S time off or compensatory time off.

Section 3. Compensation and Benefits.

A. CITY agrees to pay the MUNICIPAL JUDGE for her services rendered pursuant hereto an annual base salary of $78,280.00, payable in accordance with the same schedule that other employees of the CITY are paid and subject to the same applicable deductions for taxes, social security, benefit plans and other wage withholdings.

B. CITY agrees to provide the MUNICIPAL JUDGE with compensation benefits as follows:

(1) City to pay Health Insurance benefits for employee only;

(2) Texas Municipal Retirement System: employee contribution equal 7% Matching Ration 2:1

(3) Longevity pay in accordance with City practices as it relates to other City employees.

(4) Professional and Association dues to appropriate memberships in State organizations and other related training as approved in consultation with the City Manager. Approved training and travel will be reimbursed at normal and customary City rates.

Section 4. Performance Evaluation.

The MUNICIPAL JUDGE, at least once annually, shall provide the City Council with a written report of her continuing education activities and any specific areas of interest related to her abilities to perform the full range of her court duties.

Section 5. Hours of Work.

The position of MUNICIPAL JUDGE is a professional position, and MUNICIPAL JUDGE agrees that during regular business hours she will generally be involved in the pursuit of City business. The City recognizes that on occasion the MUNICIPAL JUDGE must devote time outside regular business hours of municipal office in performing her powers and duties (i.e. night court, etc.), and City agrees that the MUNICIPAL JUDGE may attend to personal matters during regular business hours when such use is reasonable and does not interfere with her duties or is compelled by unusual circumstances.

Section 6. Expenses.

The MUNICIPAL JUDGE shall be reimbursed for job-related expenses incurred in the conduct of City business, in the same manner and for the same purposes as other City employees.

Section 7. Severance.

If, and only if, terminated other than "for cause" by the City Council as defined hereinbelow, the MUNICIPAL JUDGE shall upon termination receive one lump sum payment of severance pay not to exceed the equivalent of two (2) months standard salary plus accumulated vacation time as provided in the City's Personnel Handbook. If the MUNICIPAL JUDGE resigns of her own initiative, leaves for other employment, retires, or is terminated "for cause" this section does not apply. The term "for cause," as used in this section, shall mean a conviction

Attachment: 2014-077 ATTH 01 Municipal Judge Compensation Agreement 2014-2016 [Revision 1] (1133 : Res 2014-077 Reappoint Judge

for a misdemeanor involving moral turpitude or personal gain or for any felony or a pattern of insubordination which stems from a persistent failure to comply with a legally authorized written directive from the City Manager or City Council and which continues after a reasonable opportunity to remediate such failure to comply.

Section 8. Vacation, Sick Leave, Retirement, and other Benefits.

In addition to the benefits provided in this Agreement, all provisions of the City's Code of Ordinances and Employee Personnel Handbook relating to health care, vacation, sick leave, retirement system contributions, holidays and other fringe benefits and working conditions as they now exist or may be amended, shall also apply to the MUNICIPAL JUDGE as they would to other employees of the CITY, insofar as those provisions, rules and regulations are not inconsistent with this Agreement.

Section 9. Notices.

Any notice required or permitted to be delivered hereunder shall be deemed received when sent by United States mail, postage prepaid, certified mail, return receipt requested, addressed to CITY or MUNICIPAL JUDGE as the case may be at the address set forth opposite the signature of the party.

Section 10. Entire Agreement.

This Agreement constitutes the sole and only agreement of the parties and supersedes any prior understandings or written or oral agreements between the parties respecting this subject matter.

Section 11. Successor and Assigns.

This Agreement shall be binding on and inure to the benefit of the parties to it and their respective heirs, executors, administrators, legal representatives, successors, and assigns.

Section 12. Governing Law.

This Agreement is governed by the laws of the State of Texas; and venue for any action concerning this Agreement shall be Bowie County, Texas.

Attachment: 2014-077 ATTH 01 Municipal Judge Compensation Agreement 2014-2016 [Revision 1] (1133 : Res 2014-077 Reappoint Judge

Attachment: 2014-077 ATTH 01 Municipal Judge Compensation Agreement 2014-2016 [Revision 1] (1133 : Res 2014-077 Reappoint Judge

Section 13. Amendment.

This Agreement may be amended by the mutual written agreement of the parties.

Section 14. Legal Construction.

In the event any one or more of the provisions contained in this Agreement shall for any reason be held to be invalid, illegal, or unenforceable in any respect, such invalidity, illegality, or unenforceability shall not affect any other provisions, and the Agreement shall be construed as if such invalid, illegal, or unenforceable provision had never been contained in it.

Section 15. No Waiver.

The failure to enforce or insist on performance of any term or provision of this Agreement by CITY shall not be construed as a waiver of such provision.

EXECUTED this _____day of _____, 2014.

MUNICIPAL JUDGE

By: _____
Sherry L. Jackson
Texas Municipal Court
100 N. Stateline, Box 1
Texarkana, Texas 75501

CITY OF TEXARKANA, TEXAS

By: _____
John A. Whitson, ICMA-CM
City Manager
City Manager's Office
P. O. Box 1967
Texarkana, Texas 75504

ATTEST:

By: _____
Jennifer Evans
City Secretary

Attachment: 2014-077 ATTH 02 Municipal Judge Compensation Agreement 2012-2014 (1133 : Res 2014-077 Reappoint Judge Jackson as

COMPENSATION AGREEMENT

THIS AGREEMENT is made and entered into by and between the City of Texarkana, Texas, a municipal corporation, (hereinafter referred to as the "CITY") and Sherry L. Jackson, (hereinafter referred to as "MUNICIPAL JUDGE").

WITNESSETH:

WHEREAS, CITY desires to employ the services of Sherry L. Jackson as the MUNICIPAL JUDGE of the City of Texarkana, Texas; and

WHEREAS, it is the desire of the City Council of the City of Texarkana, Texas, to provide certain compensation benefits, establish certain conditions of employment and to set working conditions of said MUNICIPAL JUDGE; and

WHEREAS, Sherry L. Jackson desires to accept employment as the MUNICIPAL JUDGE of the City of Texarkana, Texas;

NOW, THEREFORE, for and in consideration of the mutual covenants contained herein, and other good and valuable consideration, the receipt and sufficiency of which is hereby acknowledged and confessed, the parties agree as follows:

Section 1. Duties.

CITY hereby agrees to employ said Sherry L. Jackson as the MUNICIPAL JUDGE of said CITY to perform the functions and duties authorized under State law, the City Charter and City Ordinances, and to perform other legally permissible and proper duties and functions as the Council or City Manager shall from time to time assign.

Section 2. Term.

A. Sherry L. Jackson shall commence serving as the MUNICIPAL JUDGE on the 1st day of August, 2012, and continue serving under the terms of this contract through the last day of July, 2014. Nothing in this Agreement shall prevent, limit or otherwise interfere with the right of the City Council to terminate the services of the MUNICIPAL JUDGE at any time, with or without cause. Sufficiency of cause shall be solely within the discretion of CITY. Nothing contained within this Agreement shall be construed to confer an expectation of continued employment or a property interest therein.

B. Nothing in this Agreement shall prevent, limit or otherwise interfere with the right of the MUNICIPAL JUDGE to resign at any time from her position with the CITY.

C. MUNICIPAL JUDGE agrees to remain in the exclusive employ of CITY and to accept no other employment by another employer during the term of this Agreement. The term "employment" shall not be construed to include occasional teaching, writing, consulting, serving as legal counsel for issues unrelated to City business, or mediation performed on the MUNICIPAL JUDGE'S time off or compensatory time off.

Section 3. Compensation and Benefits.

A. CITY agrees to pay the MUNICIPAL JUDGE for her services rendered pursuant hereto an annual base salary of $78,280.00, payable in accordance with the same schedule that other employees of the CITY are paid and subject to the same applicable deductions for taxes, social security, benefit plans and other wage withholdings.

B. CITY agrees to provide the MUNICIPAL JUDGE with compensation benefits as follows:

(1) City to pay Health Insurance benefits for employee only;

(2) Texas Municipal Retirement System: employee contribution equal 7% Matching Ration 2:1

(3) Longevity pay in accordance with City practices as it relates to other City employees.

Attachment: 2014-077 ATTH 02 Municipal Judge Compensation Agreement 2012-2014 (1133 : Res 2014-077 Reappoint Judge Jackson as

(4) Professional and Association dues to appropriate memberships in State organizations and other related training as approved in consultation with the City Manager. Approved training and travel will be reimbursed at normal and customary City rates.

Section 4. Performance Evaluation.

The City Council in collaboration with the City Manager shall evaluate and assess in writing the performance of the MUNICIPAL JUDGE at least once each year. The evaluation and assessment shall be in accordance with (1) specific written criteria for an individual action plan developed jointly by the City Manager and the MUNICIPAL JUDGE which shall be reasonably related to the duties of the MUNICIPAL JUDGE and (2) her performance with respect to achieving the goals and objectives of the action plan.

Section 5. Hours of Work.

The position of MUNICIPAL JUDGE is a professional position, and MUNICIPAL JUDGE agrees that during regular business hours she will generally be involved in the pursuit of City business. The City recognizes that on occasion the MUNICIPAL JUDGE must devote time outside regular business hours of municipal office in performing her powers and duties (i.e. night court, etc.), and City agrees that the MUNICIPAL JUDGE may attend to personal matters during regular business hours when such use is reasonable and does not interfere with her duties or is compelled by unusual circumstances.

Section 6. Expenses.

The MUNICIPAL JUDGE shall be reimbursed for job-related expenses incurred in the conduct of City business, in the same manner and for the same purposes as other City employees. Participation in, and travel related to such training shall be approved by the City Manager.

Section 7. Severance.

If, and only if, terminated other than "for cause" by the City Council as defined hereinbelow, the MUNICIPAL JUDGE shall upon termination receive one lump sum payment of severance pay not to exceed the equivalent of two (2) months standard salary plus accumulated

Attachment: 2014-077 ATTH 02 Municipal Judge Compensation Agreement 2012-2014 (1133 : Res 2014-077 Reappoint Judge Jackson as

vacation time as provided in the City's Personnel Handbook. If the MUNICIPAL JUDGE resigns of her own initiative, leaves for other employment, retires, or is terminated "for cause" this section does not apply. The term "for cause," as used in this section, shall mean a conviction for a misdemeanor involving moral turpitude or personal gain or for any felony or a pattern of insubordination which stems from a persistent failure to comply with a legally authorized written directive from the City Manager or City Council and which continues after a reasonable opportunity to remediate such failure to comply.

Section 8. Vacation, Sick Leave, Retirement, and other Benefits.

In addition to the benefits provided in this Agreement, all provisions of the City's Code of Ordinances and Employee Personnel Handbook relating to health care, vacation, sick leave, retirement system contributions, holidays and other fringe benefits and working conditions as they now exist or may be amended, shall also apply to the MUNICIPAL JUDGE as they would to other employees of the CITY, insofar as those provisions, rules and regulations are not inconsistent with this Agreement.

Section 9. Notices.

Any notice required or permitted to be delivered hereunder shall be deemed received when sent by United States mail, postage prepaid, certified mail, return receipt requested, addressed to CITY or MUNICIPAL JUDGE as the case may be at the address set forth opposite the signature of the party.

Section 10. Entire Agreement.

This Agreement constitutes the sole and only agreement of the parties and supersedes any prior understandings or written or oral agreements between the parties respecting this subject matter.

Section 11. Successor and Assigns.

This Agreement shall be binding on and inure to the benefit of the parties to it and their respective heirs, executors, administrators, legal representatives, successors, and assigns.

Attachment: 2014-077 ATTH 02 Municipal Judge Compensation Agreement 2012-2014 (1133 : Res 2014-077 Reappoint Judge Jackson as

Section 12. Governing Law.

This Agreement is governed by the laws of the State of Texas; and venue for any action concerning this Agreement shall be Bowie County, Texas.

Section 13. Amendment.

This Agreement may be amended by the mutual written agreement of the parties.

Section 14. Legal Construction.

In the event any one or more of the provisions contained in this Agreement shall for any reason be held to be invalid, illegal, or unenforceable in any respect, such invalidity, illegality, or unenforceability shall not affect any other provisions, and the Agreement shall be construed as if such invalid, illegal, or unenforceable provision had never been contained in it.

Section 15. No Waiver.

The failure to enforce or insist on performance of any term or provision of this Agreement by CITY shall not be construed as a waiver of such provision.

EXECUTED this _____day of _____, 2012.

MUNICIPAL JUDGE

By: _____

Sherry L. Jackson
Texas Municipal Court
100 N. Stateline, Box 1
Texarkana, Texas 75501

CITY OF TEXARKANA, TEXAS

By: _____

F. Larry Sullivan, Ed. D.
City Manager
City Manager's Office
P. O. Box 1967
Texarkana, Texas 75504

ATTEST:

By: _____

Kerry Meredith
City Secretary

Attachment: 2014-077 ATTH 02 Municipal Judge Compensation Agreement 2012-2014 (1133 : Res 2014-077 Reappoint Judge Jackson as

City of Texarkana, Texas

Version: N

Briefing Sheet

Update Date: 7/7/2014 2:58 PM

Lead Department: Public Works **Action Officer:** Debbie Burk,

Subject: Ordinance No. 2014-052 granting a Specific Use Permit to allow the location of a CEVMS (digital) billboard on a part of Tract 18, George Brinlee HRS, A-18, located at 2506 Richmond Road. Mark Liepman, owner. Chad Shipp, Shipp Outdoor, LLC, agent. (Due to Planning and Zoning Commission denial, a 3/4 vote by the City Council is required to approve this request).

Briefing:	7/14/2014	**Public Hearing:**	5/12/2014	**Second Briefing:**	May 27, 2014	**Council Vote:**	7/14/2014

Item Schedule
Schedule 1: Brief twice - vote once (six weeks)

Updates/History of Briefing:

A public hearing was held by the City Council on May 12, 2014 and the following citizens spoke about the electronic billboard

For:

Amy Thomas
Tracey Prather
Brian Goesel
Chad Shipp
Joel Orr
Shanna Richardson

Against:

Tom Sadowski
Julie Tidwell
Fred Cain
Parker Phoenix

Comments:

Ruth Ellen Whitt asked the Council to consider the overall vision for the City when making the decision on this issue.

Executive Summary and Background Information:

S-653: This is a request from Mark Liepman, owner, and Chad Shipp, Shipp Outdoor, LLC, agent, requesting a Specific Use Permit to allow the location of a CEVMS (digital) billboard on part of Tract 18, George Brinlee HRS, A-18, located at 2506 Richmond Road. This property is currently the location of the Dairy Queen Restaurant.

The adjacent zoning is General Retail to the north, south east and Commercial to the west. The adjacent land use is Little Caesar's Pizza restaurant to the north, a car title loan business to the south, a parking lot of Super One Foods to the east and Starbucks Coffee/ Shopping Center to the west.

The Comprehensive Plan has designated this as a retail area.

City of Texarkana, Texas

Mr. Shipp is proposing to lease this property to construct an off-premise CEVMS (digital) billboard at the northeast corner of the Dairy Queen Restaurant parking lot. See attached map showing the exact location of the billboard.

General Retail zoning is required along with approval of a Specific Use Permit to allow the construction of an off-premise billboard structure. The proposed CEVMS (digital) billboard will be a double-sided, 14' x 48' in size (672 square feet) with an overall height of 42 feet'.

If approved, staff would suggest the following stipulations:

1. There will be only one billboard allowed on the property at this location (see attached legal and exhibit). The CEVMS billboard will be a 2 sided digital billboard.
2. The CEVMS billboard will be 14' x 48' in size or 672 square feet in size.
3. All State of Texas requirements for this location must be followed except when local requirements are more restrictive. Therefore, the CEVMS billboard will have an overall height not to exceed **35 feet** per the building, structure and sign height requirement in Section 10-101 of the City Zoning Ordinance.
4. Any distance requirements from existing utility lines from any utility company.

Potential Options:

1. Approve or deny Ordinance for the billboard at 2506 Richmond Road.

Fiscal Implications:

None

Staff Recommendation:

Staff recommends for denial of this request. Staff is concerned that allowing a CEVMS billboard on Richmond Road would set a precedent for similar requests.

Advisory Board/Committee Review:

Board/Committee Recommendation:

The Planning and Zoning Commission unanimously recommended for denial of this request. The Commission has consistently been opposed to any type of billboards along Richmond Road. The Commission also is concerned about setting a precedent for requests for other billboards.

Due to Planning and Zoning Commission denial, a 3/4 vote by the City Council is required to approve this request.

Advisory Board/Committee Meeting Date and Minutes:

The Planning and Zoning Commission met on April 7, 2014 to consider this request and unanimously recommended for denial.

City of Texarkana, Texas

Attachments

a. Ordinance No. 2014-052 (DOCX)
b. Goals and Perspectives (DOCX)
c. Exhibit "A" attachment to Ord. # 2014-052 (legal description) (PDF)
d. Exhibit "B" attachment to Ord. # 2014-052 (rendering) (PDF)
e. Maps for Ord. # 2014-052 (PDF)
f. Ward map for Ord. # 2014-052 (PDF)
g. Richmond Road Shipp Media Presentation for Signage (PDF)
h. Shipp Digital Sign at DQ on Richmond (PDF)
i. Shipp Outdoor - Ltrs of Supt (Ord. 2014-052) (PDF)
j. Shipp Outdoor - Prpsd Billbrd Rendering (Ord. 2014-052) (PDF)
k. Digital Billboard Facts (PDF)
l. Dallas Billboard ordinance (PDF)
m. Ord. No. 2014-052 Digital Billboard Study Report Link (PDF)
n. Shipp Digital Sign at DQ on Richmond Updated 20140521 (PDF)

Staff Coordination

Assistant City Manager	Shirley Jaster	Department Head Review	Completed	04/17/2014 1:48 PM
Public Information Officer	Lisa Thompson	PIO Review	Completed	04/17/2014 2:04 PM
City Manager	John Whitson	City Manager Review	Completed	04/20/2014 9:46 PM
City Council	Jennifer Evans	Meeting	Completed	05/14/2014 8:46 AM
Assistant City Manager	Shirley Jaster	Department Head Review	Completed	06/25/2014 4:52 PM
Public Information Officer	Lisa Thompson	PIO Review	Completed	06/25/2014 5:05 PM
City Manager	John Whitson	City Manager Review	Completed	07/03/2014 10:06 AM

Meeting History

04/28/14	City Council	MOVED FORWARD	Next: 05/12/14
05/12/14	City Council	MOVED FORWARD	Next: 05/27/14
05/27/14	City Council	MOVED FORWARD	Next: 06/09/14
06/09/14	City Council	MOVED FORWARD	Next: 07/14/14

S-653

ORDINANCE NO. 2014-052

AN ORDINANCE OF THE CITY COUNCIL OF THE CITY OF TEXARKANA, TEXAS, AMENDING THE ZONING MAP SHOWING THE LOCATION, BOUNDARY AND USE OF CERTAIN PROPERTY BY THE GRANTING OF SPECIFIC USE PERMIT NO. S-653 TO ALLOW THE LOCATION OF A CEVMS BILLBOARD ON PART OF TRACT 18, GEORGE BRINLEE HRS, A-18, LOCATED AT 2506 RICHMOND ROAD IN THE CITY OF TEXARKANA, BOWIE COUNTY, TEXAS; CONTAINING A REPEALER CLAUSE; CONTAINING A SEVERABILITY CLAUSE; AND ESTABLISHING AN EFFECTIVE DATE.

WHEREAS, an application has been filed with the City of Texarkana, Texas, requesting an Amendment to the Zoning Ordinance so as to grant a **Specific Use Permit** to allow the location of **a CEVMS billboard** on part of Tract 18, George Brinlee HRS, A-18 (Exhibit "A"), located at 2506 Richmond Road in the City of Texarkana, Bowie County, Texas; and

WHEREAS, the Planning and Zoning Commission of the City of Texarkana, Texas and the City Council of the City of Texarkana, Texas, in compliance with the laws of the State of Texas with reference to the granting of zoning classifications and changes, have given the requisite notices by publication and otherwise, and after holding hearings and affording a full and fair hearing to all property owners generally and to all persons interested and situated in the affected area and in the vicinity thereof; and

WHEREAS, after consideration of said application, the Planning and Zoning Commission of the City of Texarkana, Texas, **voted unanimously by a vote of six (6) to zero (O) to recommend denial of the petition for the request to grant a Specific Use Permit to allow the location of a CEVMS billboard (Exhibit "B")** on said property; and

WHEREAS, after consideration of said application and the recommendation of the Planning and Zoning Commission, the City Council of the City of Texarkana, Texas, does hereby find that granting the **Specific Use Permit** is in the best interest of the public health, safety, morals and general welfare of the City;

NOW, THEREFORE, BE IT ORDAINED BY THE CITY COUNCIL OF THE CITY OF TEXARKANA, TEXAS:

SECTION 1: That the Zoning Ordinance of the City of Texarkana, Texas, Ordinance No. 127-70, passed and approved on September 14, 1970, be further amended so as to grant a **Specific Use Permit numbered S-653 for the purpose of locating a CEVMS billboard** on the following described property, to-wit: **part of Tract 18, George Brinlee HRS, A-18, located at 2506 Richmond Road (Exhibit "A") in the City of Texarkana, Bowie County, Texas.**

SECTION 2: That the following special terms and conditions are hereby imposed and made a part of this Ordinance:

1. There will be only one billboard allowed on the property at this location (see attached legal and exhibit). The CEVMS billboard will be a 2 sided digital billboard.
2. The CEVMS billboard will be 14' x 48' in size or 672 square feet in size.

Attachment: Ordinance No. 2014-052 [Revision 1] (1091 : Ord. 2014-052 - SUP for billboard at 2506 Richmond Road)

3. All State of Texas requirements for this location must be followed except when local requirements are more restrictive. Therefore, the CEVMS billboard will have an overall height not to exceed **35 feet** per the building, structure and sign height requirement in Section 10-101 of the City Zoning Ordinance.
4. Any distance requirements from existing utility lines from any utility company.

SECTION 3: All ordinances or parts of ordinances in conflict herewith are specifically repealed to the extent of such conflict.

SECTION 4: It is further provided that in case a section, clause, sentence or part of this Ordinance shall be deemed or adjudged by a court of competent jurisdiction to be invalid, then such invalidity shall not affect, impair, or invalidate the remainder of this Ordinance.

SECTION 5: That this Ordinance shall be in full force and effect from and after its passage and approval.

PASSED AND APPROVED in Regular Council Session on this the 14th day of July, 2014.

ATTEST:

JENNIFER EVANS, CITY SECRETARY	BOB BRUGGEMAN, MAYOR

Attachment: Ordinance No. 2014-052 [Revision 1] (1091 : Ord. 2014-052 - SUP for billboard at 2506 Richmond Road)

City of Texarkana, Texas

Developing Perspectives and Goals Pending Approval by the City Council:

Perspectives	Goals
Serve the Community	☐ Promote an Environmentally Sensitive & Livable Community ☐ Provide a Safe Community ☐ Deliver Quality Services ☐ Foster a Healthy Community
Run the Operations	☐ Enhance Community Preparedness & Responsiveness ☐ Maximize Partnership Opportunities ☐ Provide Courteous & Responsive Customer Service ☑ Model a Positive City Image ☐ Deliver Efficient Services ☑ Cultivate Community Involvement & Access
Manage the Resources	☐ Maintain Fiscal Strength ☐ Maximize Utilization & Resources ☐ Invest in Infrastructure & Transportation
Develop Personnel	☐ Develop a Skilled & Diverse Workforce ☐ Create a Positive & Rewarding Work Culture

Perspectives and Goals Additional Comments:

None

Resource Impact:

Staff time required if item is approved:	Select One By Clicking Here

Other Potential Impacts:

None

Public Information Plan:

☑	Newspaper Notice (Required by Statute)	☑	Public Hearing (Required by Statute)
☐	Public Forum/Input Session	☐	Press Release
☐	E-News Distribution	☑	Website Notice
☐	Social Media (Twitter, Facebook, etc.)	☑	Special Mailing
☐	Flyers Posted	☐	Banners Posted
☐	Survey	☐	Automated Phone Call
☐	None Required	☑	Sign posted

Other:

Attachment: Goals and Perspectives (1091 : Ord. 2014-052 - SUP for billboard at 2506 Richmond Road)

ESHIBIT "A"

All that certain tract or parcel of land being a part of the GEORGE BRINLEE HEADRIGHT SURVEY, A-18, Bowie County, Texas; said tract of land being a part of a certain 0.373 acre tract conveyed to Liepman Restaurants, Inc., by Special Warranty Deed recorded in Volume 2596, Page 244 of the Real Property Records of Bowie County, Texas; and being more particularly described by metes and bounds as follows:

BEGINNING at the Northeast corner of a certain 0.373 acre tract conveyed to Liepman Restaurants, Inc., by Special Warranty Deed recorded in Volume 2596, Page 244 of the Real Property Records of Bowie County, Texas;

THENCE – S. 40° 57' 00" E., 40.00 ft. with the East boundary line of the above mentioned 0.373 acre tract;

THENCE – S. 49° 03' 00" W., 50.00 ft. parallel with the North boundary line of the above mentioned 0.373 acre tract;

THENCE – N. 40° 57' 00" W., 40.00 ft. parallel with the above mentioned East boundary line of 0.373 acre tract to the above mentioned North boundary line of 0.373 acre tract;

THENCE – N. 49° 03' 00" E., 50.00 ft. with the above mentioned North boundary line of 0.373 acre tract to the POINT OF BEGINNING; basis of bearings is call bearing of South boundary line of said 0.373 acre tract. The above described property being surveyed by Richard V. Hall, Jr. contains 0.046 acres of land, more or less.

Attachment: Exhibit ?A? attachment to Ord. # 2014-052 (legal description) (1091 : Ord. 2014-052 - SUP for billboard at 2506 Richmond Road)

Chad
Shipp

EXHIBIT "B"

NEW PROPOSED DOUBLE-SIDED DIGITAL BILLBOARD LOCATION BY

SIDE 2 - VIEW FROM DOLLAR GENERAL PARKING LOT

Attachment: Exhibit ?B? attachment to Ord. # 2014-052 (rendering) (1091 : Ord. 2014-052 - SUP for billboard at 2506 Richmond Road)

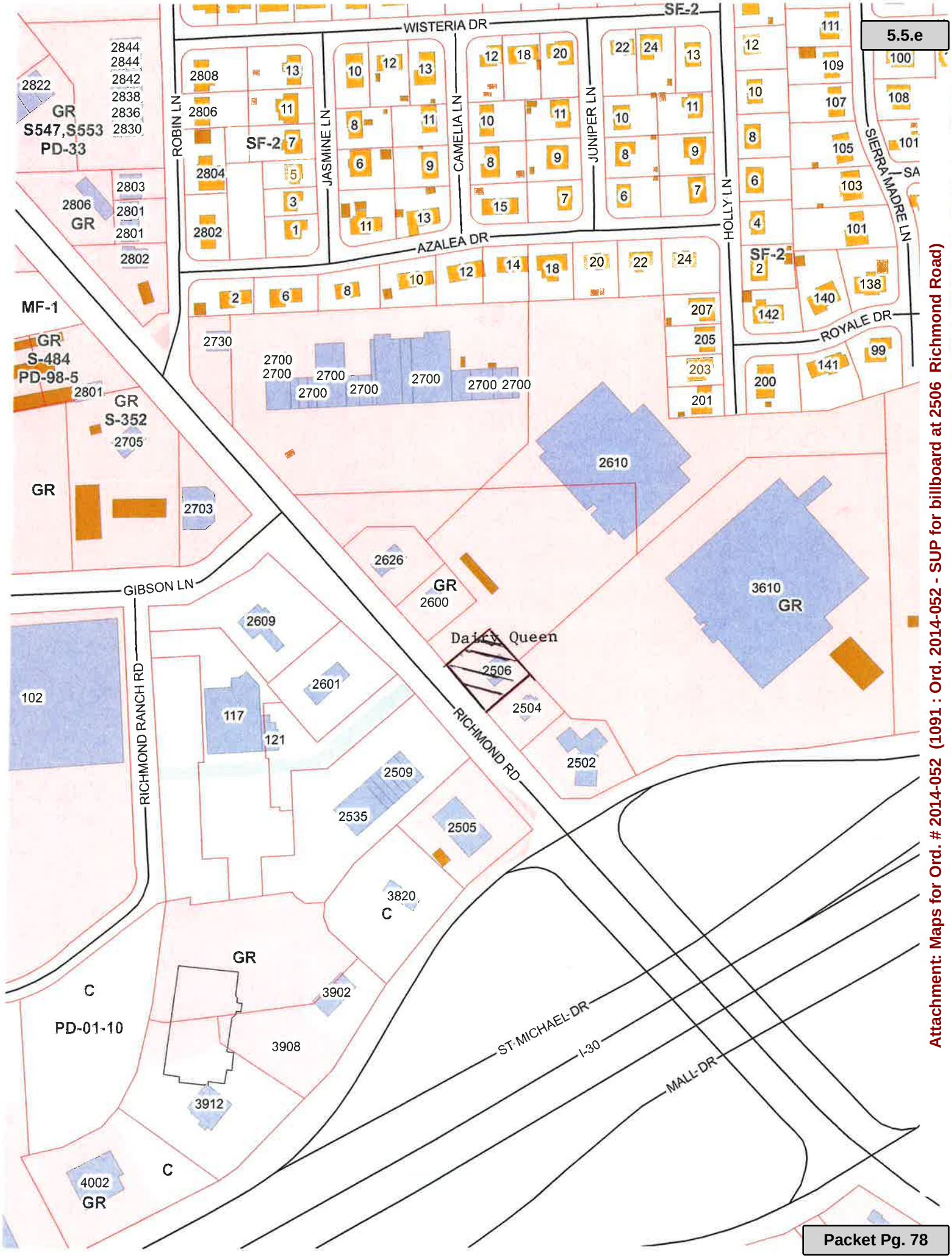

Attachment: Maps for Ord. # 2014-052 (1091 : Ord. 2014-052 - SUP for billboard at 2506 Richmond Road)

2700
2610
Super one
2626
2600
Location of billboard
Sam's
DQ
2506
2601
2504
121
RICHMOND RD
2502
2519
2509
Starbucks
2535
2505
Exxon
3820
3902
ST MICHAEL DR
I-30

Attachment: Maps for Ord. # 2014-052 (1091 : Ord. 2014-052 - SUP for billboard at 2506 Richmond Road)

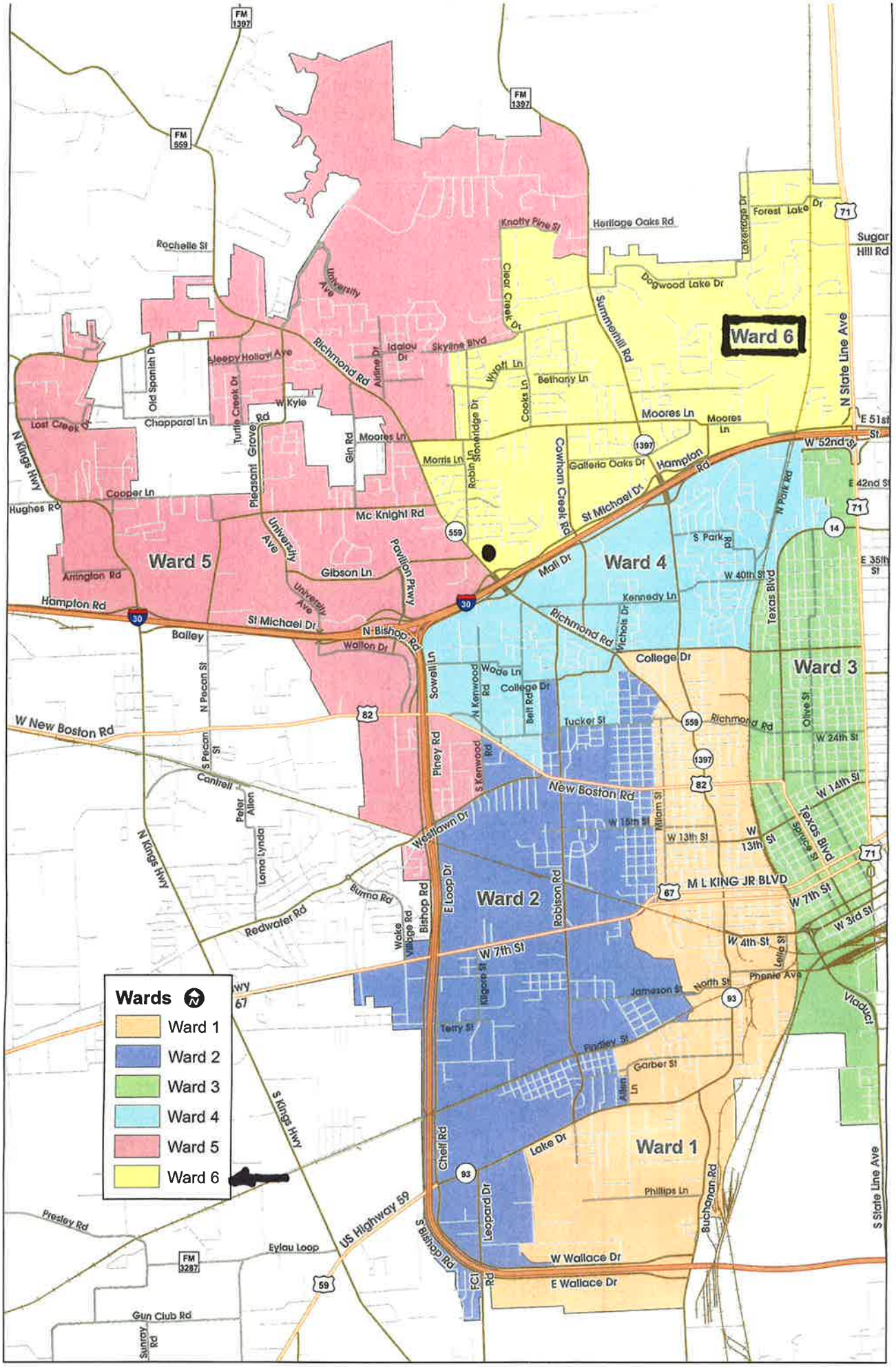

Attachment: Ward map for Ord. # 2014-052 (1091 : Ord. 2014-052 - SUP for billboard at 2506 Richmond Road)

Attachment: Richmond Road Shipp Media Presentation for Signage (1091 : Ord. 2014-052 - SUP for

Attachment: Richmond Road Shipp Media Presentation for Signage (1091 : Ord. 2014-052 - SUP for

"When the facts change, I change my mind."

John Maynard Keynes
British Economist

In the past decade the facts of the outdoor advertising industry have changed.

Attachment: Richmond Road Shipp Media Presentation for Signage (1091 : Ord. 2014-052 - SUP for

The facts were - billboards are old, outdated, unattractive.

Attachment: Richmond Road Shipp Media Presentation for Signage (1091 : Ord. 2014-052 - SUP for

The facts now are - outdoor advertising structures can be stunning, high-tech, digital outdoor messaging centers.

Attachment: Richmond Road Shipp Media Presentation for Signage (1091 : Ord. 2014-052 - SUP for

There is no comparison between these two signs in appearance or capability.

Attachment: Richmond Road Shipp Media Presentation for Signage (1091 : Ord. 2014-052 - SUP for

They're not just signs, but signs of progress.

Attachment: Richmond Road Shipp Media Presentation for Signage (1091 : Ord. 2014-052 - SUP for

Shipp Outdoor is changing the facts of the local outdoor advertising industry by creating visually appealing structures with high-tech communications capabilities that benefit the city, local businesses and non-profits.

I30 Nash, TX

Attachment: Richmond Road Shipp Media Presentation for Signage (1091 : Ord. 2014-052 - SUP for

I30 next to El Chico's

Attachment: Richmond Road Shipp Media Presentation for Signage (1091 : Ord. 2014-052 - SUP for

Hwy 549 (Loop 245) near Cooper Tire

What you've just seen is the creation
of Texarkana's only outdoor digital network.

Instead of advertising in one location, advertiser ads rotate from one location to the next every two weeks allowing them to reach a much greater audience at a very low rate with no vinyl to print and install.

In addition to the visual appeal of our signs, there are many compelling reasons for the city to

"CHANGE ITS MIND"

about outdoor advertising in the main retail corridor of Richmond Road.

How does digital outdoor benefit the city?

In times of extraordinary negativity, Shipp Outdoor promotes a positive image of Texarkana - free of charge.

We believe this works to change hearts and minds and give people a positive view of the place they call home and offers visitors an excellent first impression.

Attachment: Richmond Road Shipp Media Presentation for Signage (1091 : Ord. 2014-052 - SUP for

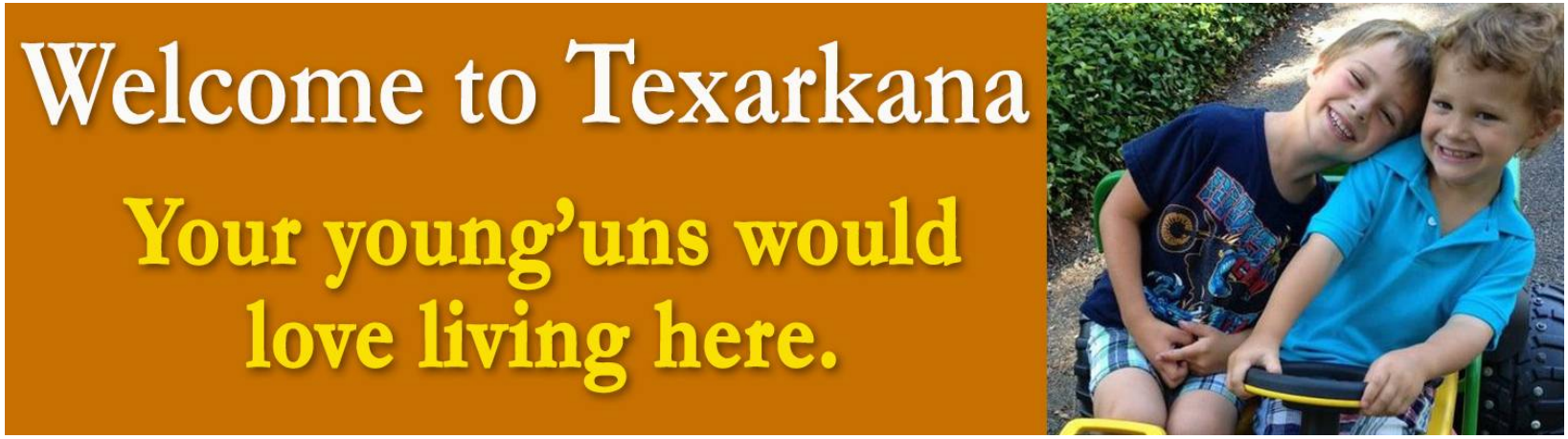

Attachment: Richmond Road Shipp Media Presentation for Signage (1091 : Ord. 2014-052 - SUP for

Attachment: Richmond Road Shipp Media Presentation for Signage (1091 : Ord. 2014-052 - SUP for

Attachment: Richmond Road Shipp Media Presentation for Signage (1091 : Ord. 2014-052 - SUP for

Attachment: Richmond Road Shipp Media Presentation for Signage (1091 : Ord. 2014-052 - SUP for

ROADS • RAIL • WATER • LABOR
TEXARKANA
DO BUSINESS HERE.

We brag on our hometown success stories

Attachment: Richmond Road Shipp Media Presentation for Signage (1091 : Ord. 2014-052 - SUP for

And have a little fun, too

Attachment: Richmond Road Shipp Media Presentation for Signage (1091 : Ord. 2014-052 - SUP for

And offer motorists a little holiday cheer.

Attachment: Richmond Road Shipp Media Presentation for Signage (1091 : Ord. 2014-052 - SUP for

Welcome to Texarkana
Merry Christmas
SHIPP OUTDOOR

SHIPP
OUTDOOR
FOR UNTO US A CHILD IS BORN

Attachment: Richmond Road Shipp Media Presentation for Signage (1091 : Ord. 2014-052 - SUP for

We display heart-warming moments

Attachment: Richmond Road Shipp Media Presentation for Signage (1091 : Ord. 2014-052 - SUP for

And give young men a real shot at landing a date…

Attachment: Richmond Road Shipp Media Presentation for Signage (1091 : Ord. 2014-052 - SUP for

We remember local people.

Attachment: Richmond Road Shipp Media Presentation for Signage (1091 : Ord. 2014-052 - SUP for

And national tragedies.

Attachment: Richmond Road Shipp Media Presentation for Signage (1091 : Ord. 2014-052 - SUP for

We work to save the backbone of our economy while creating a new high-tech industry.

Attachment: Richmond Road Shipp Media Presentation for Signage (1091 : Ord. 2014-052 - SUP for

Major employers now have a new place to recruit qualified employees.

Attachment: Richmond Road Shipp Media Presentation for Signage (1091 : Ord. 2014-052 - SUP for

Non-Profits benefit with FREE ads or significant discounts.

Attachment: Richmond Road Shipp Media Presentation for Signage (1091 : Ord. 2014-052 - SUP for

Attachment: Richmond Road Shipp Media Presentation for Signage (1091 : Ord. 2014-052 - SUP for

Attachment: Richmond Road Shipp Media Presentation for Signage (1091 : Ord. 2014-052 - SUP for

523,907

Free or drastically reduced spots for non-profits
or messages for city branding.

Local schools are benefitting

Attachment: Richmond Road Shipp Media Presentation for Signage (1091 : Ord. 2014-052 - SUP for

Warnings can be issued.

Attachment: Richmond Road Shipp Media Presentation for Signage (1091 : Ord. 2014-052 - SUP for

And criminals are learning that crime just doesn’t pay.

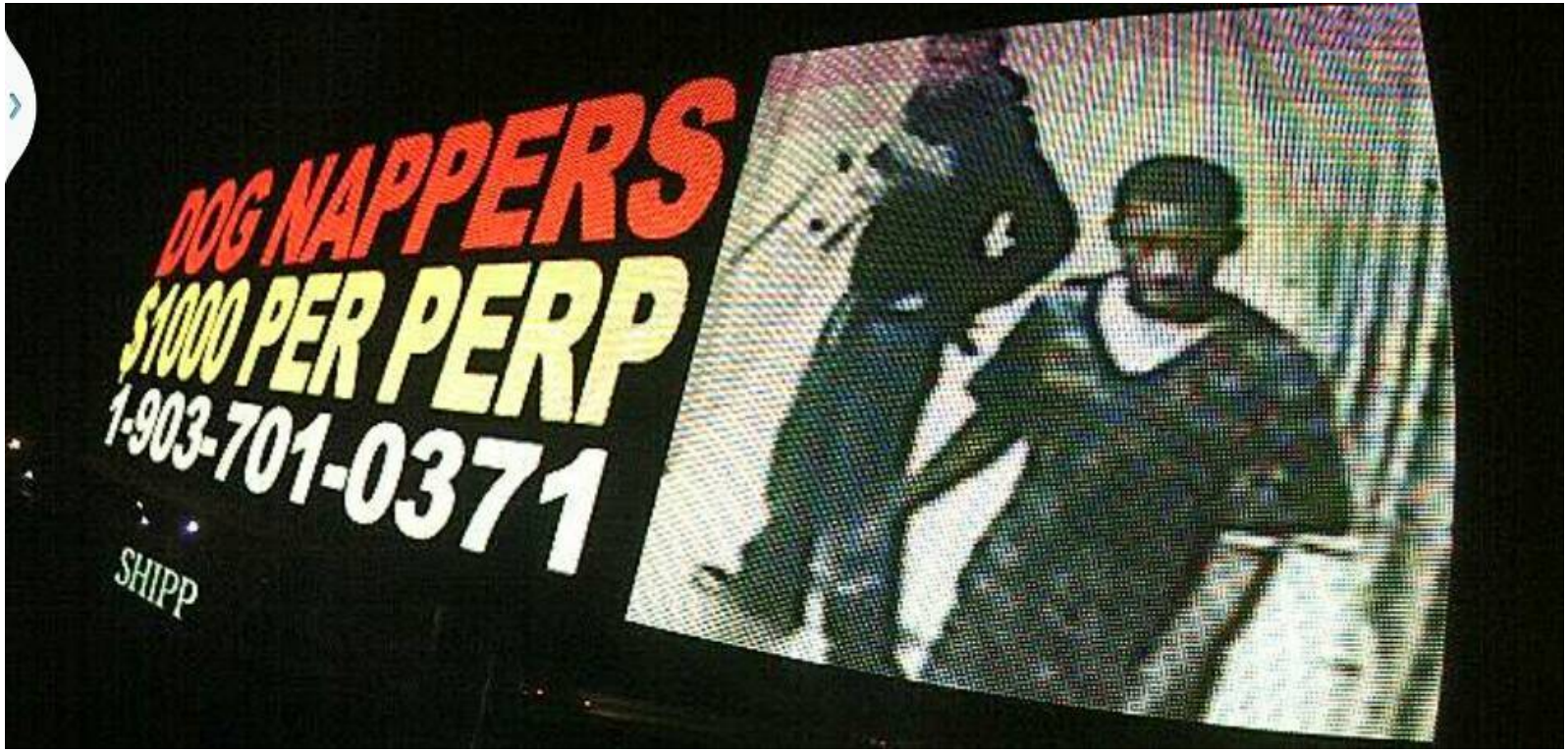

Attachment: Richmond Road Shipp Media Presentation for Signage (1091 : Ord. 2014-052 - SUP for

Local businesses stand with us.

Attachment: Richmond Road Shipp Media Presentation for Signage (1091 : Ord. 2014-052 - SUP for

Attachment: Richmond Road Shipp Media Presentation for Signage (1091 : Ord. 2014-052 - SUP for

Attachment: Richmond Road Shipp Media Presentation for Signage (1091 : Ord. 2014-052 - SUP for

TOWARD ZERO DEATHS
One is too many.
TZDarkansas.org

Attachment: Richmond Road Shipp Media Presentation for Signage (1091 : Ord. 2014-052 - SUP for

Attachment: Richmond Road Shipp Media Presentation for Signage (1091 : Ord. 2014-052 - SUP for

Attachment: Richmond Road Shipp Media Presentation for Signage (1091 : Ord. 2014-052 - SUP for

Turn Left Before McDonald's

Attachment: Richmond Road Shipp Media Presentation for Signage (1091 : Ord. 2014-052 - SUP for

Attachment: Richmond Road Shipp Media Presentation for Signage (1091 : Ord. 2014-052 - SUP for

Shipp Outdoor wants to bring Texarkana it's newest digital communications center located in the heart of the city to better communicate with local citizens and the thousands of people who enter and exit out of our city daily.

And we want it to look amazing!

Let competition do what “cap and replace” could not do – make outdated billboards obsolete.

New communication tool

NEW PROPOSED DOUBLE-SIDED DIGITAL BILLBOARD LOCATION BY SHIPP OUTDOOR

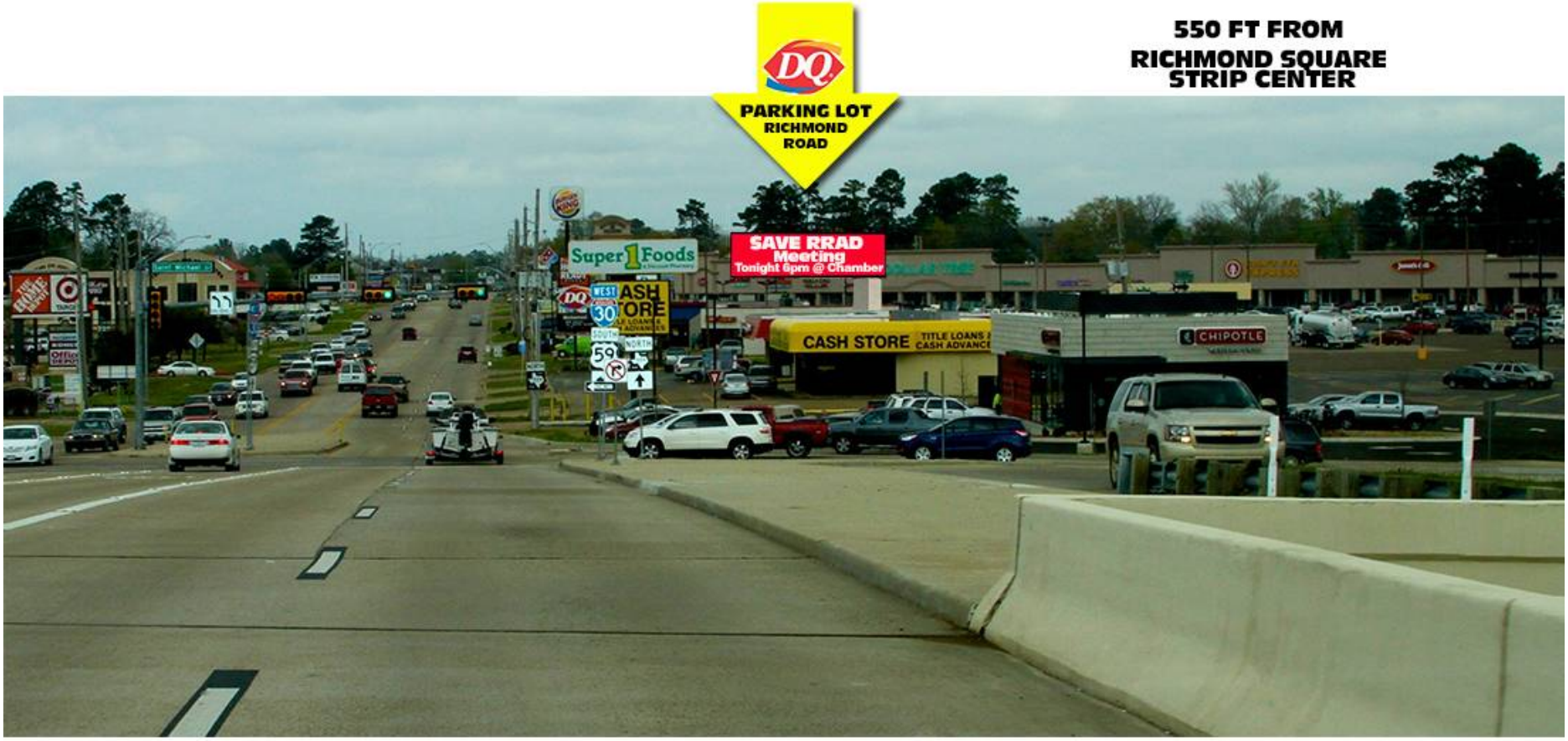

SIDE 1 - VIEW FROM RICHMOND ROAD I30 OVERPASS

Attachment: Richmond Road Shipp Media Presentation for Signage (1091 : Ord. 2014-052 - SUP for

NEW PROPOSED DOUBLE-SIDED DIGITAL BILLBOARD LOCATION BY SHIPP OUTDOOR

SIDE 2 - VIEW FROM DOLLAR GENERAL PARKING LOT

Attachment: Richmond Road Shipp Media Presentation for Signage (1091 : Ord. 2014-052 - SUP for

POLE >
A
AIRY QUEEN
STORE
559

Voting “yes” is a vote in favor of:

-The City of Texarkana, TX
-Non-Profits
-Businesses
-Progress

Attachment: Richmond Road Shipp Media Presentation for Signage (1091 : Ord. 2014-052 - SUP for

Out with the old, in with the new.

Attachment: Richmond Road Shipp Media Presentation for Signage (1091 : Ord. 2014-052 - SUP for

“When the facts change, I change my mind.”

Digital Sign by Shipp on Richmond Road

Visibility Triangles

Attachment: Shipp Digital Sign at DQ on Richmond (1091 : Ord. 2014-052 - SUP for

Attachment: Shipp Digital Sign at DQ on Richmond (1091 : Ord. 2014-052 - SUP for

Visibility Triangles with Richmond Road Orientation

Attachment: Shipp Digital Sign at DQ on Richmond (1091 : Ord. 2014-052 - SUP for

West bound on Saint Michael Drive the sign location becomes visible as the vehicle passes the Good Will location and remains visible about 8 seconds before reaching Richmond Road.

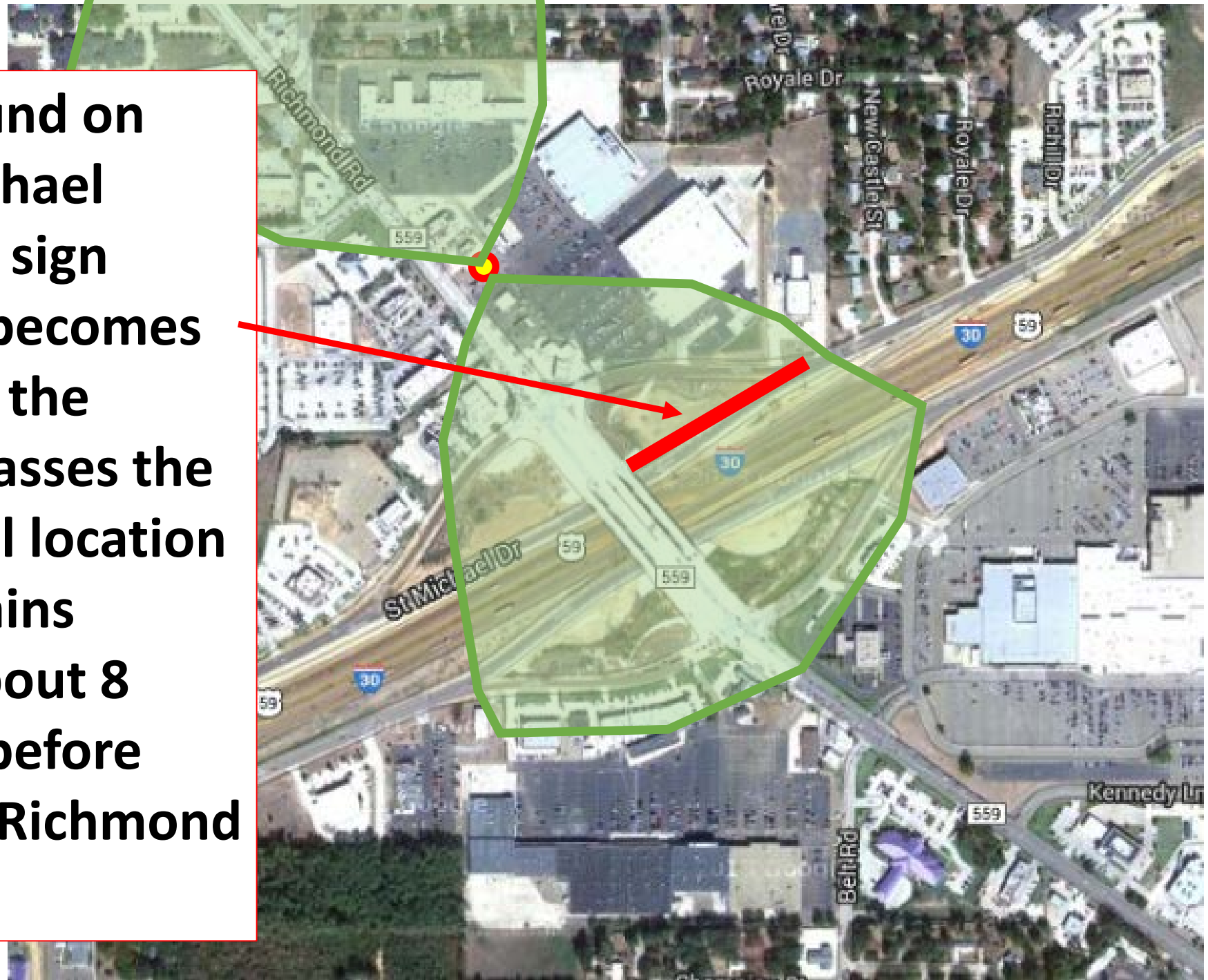

Attachment: Shipp Digital Sign at DQ on Richmond (1091 : Ord. 2014-052 - SUP for

West bound on IH-30 the sign location becomes visible as the vehicle passes the Good Will location and remains visible about 8 seconds before reaching Richmond Road.

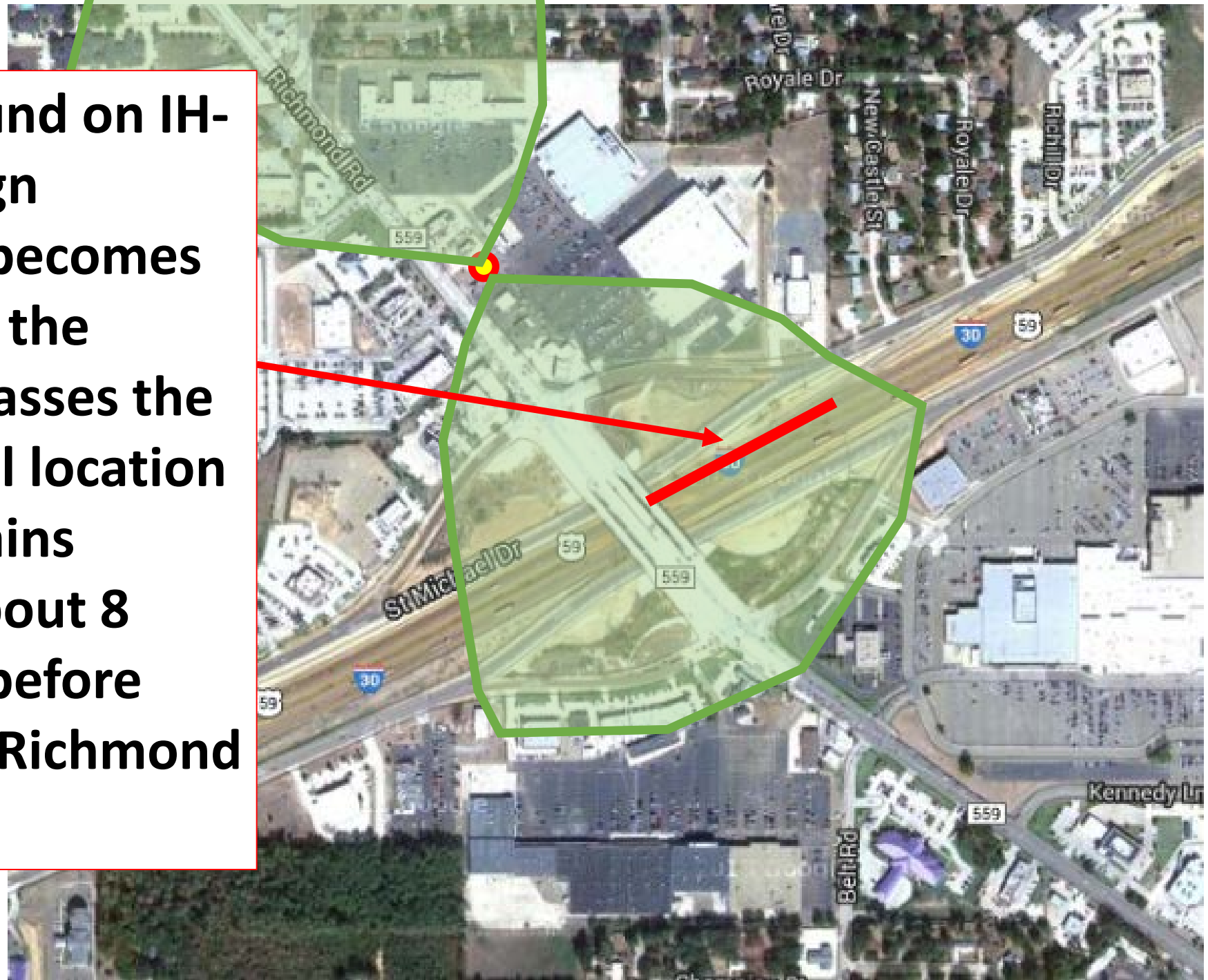

Attachment: Shipp Digital Sign at DQ on Richmond (1091 : Ord. 2014-052 - SUP for

East bound on Mall Drive the sign location becomes visible as the vehicle passes the Billy Sims BBQ location and remains visible about 8 seconds before reaching Richmond Road.

Attachment: Shipp Digital Sign at DQ on Richmond (1091 : Ord. 2014-052 - SUP for

East bound on IH-30 the sign location becomes visible as the vehicle passes the Billy Sims BBQ location and remains visible about 8 seconds before reaching Richmond Road.

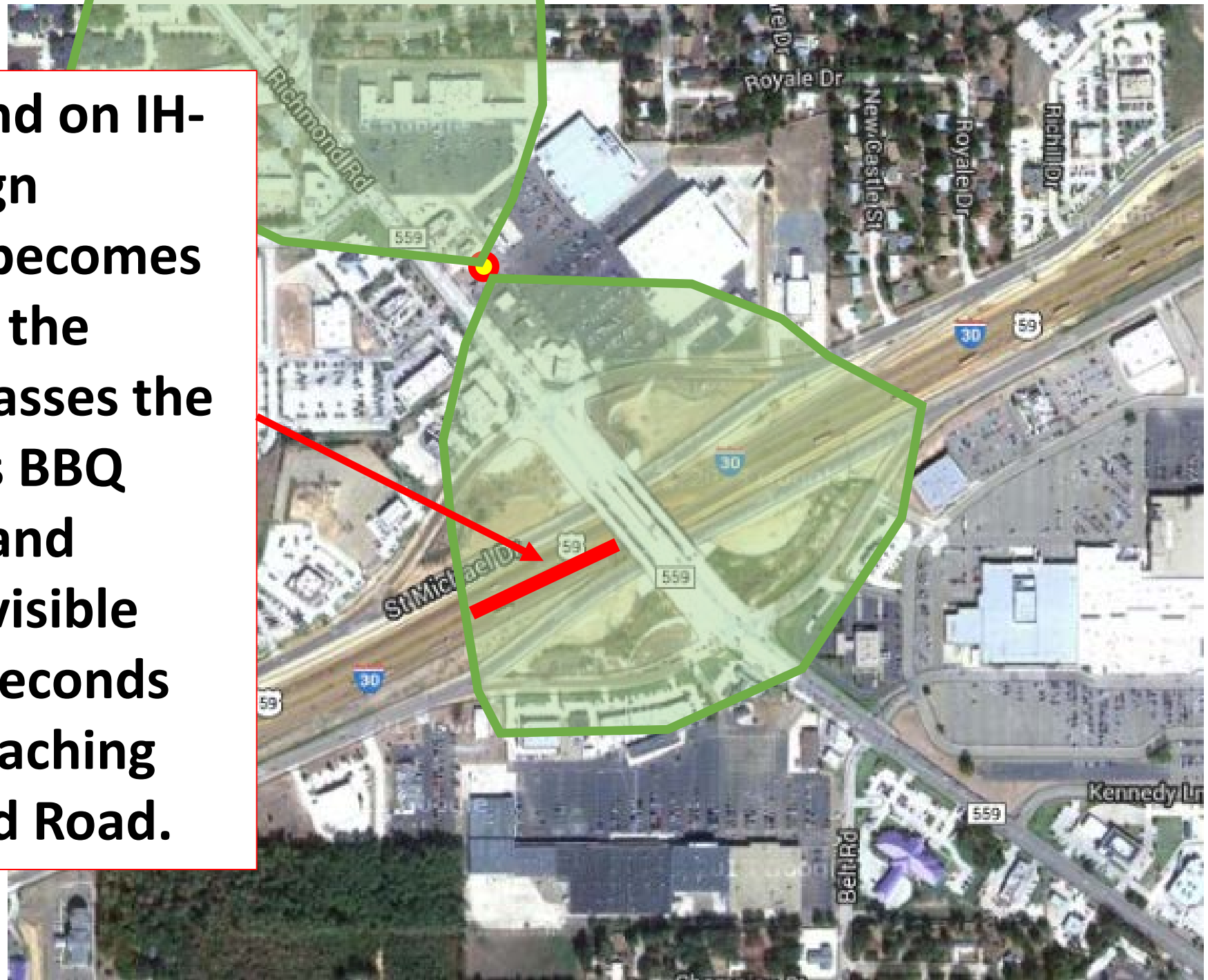

Attachment: Shipp Digital Sign at DQ on Richmond (1091 : Ord. 2014-052 - SUP for

North and South bound Richmond Road traffic will have visibility of the sign, especially based on the orientation of the sign to the roads and streets in the visibility triangles.

Attachment: Shipp Digital Sign at DQ on Richmond (1091 : Ord. 2014-052 - SUP for

Purpose of the Proposed Sign

- The sign orientation supports motorists traveling on Richmond Road
  - A local collector road
  - Congested with traffic and existing signs
- Motorists on IH-30 and the frontage roads will have limited visibility of the proposed sign:
  - Due to location off the roadway
  - Orientation of the sign to the Interstate and Frontage Road

Attachment: Shipp Digital Sign at DQ on Richmond (1091 : Ord. 2014-052 - SUP for

Ordinance No. 2014-052

Shipp Outdoor, LLC

Letters of Support

Attachment: Shipp Outdoor - Ltrs of Supt (Ord. 2014-052) (1091 : Ord. 2014-052 - SUP for billboard at 2506 Richmond Road)

JOE R. CREWS

Architecture - Interiors - Planning

28 Morris Lane Texarkana, Texas 75503
Tel. 903.255.1710 Fax 903.223.7100
joe@joecrews.com
www.joecrews.com

28 April 2014

To whom it may concern,

Shipp Outdoor has retained my services as an architect to assist in the design of an aesthetically appealing monument style brick or rock housing for the pole that will support a double-sided digital LED outdoor advertising sign on Richmond Road.

Both I and Shipp Outdoor feel this new structure will be a very attractive addition to Texarkana and built to the highest standards of quality. As local architect, I am proud to be a part of such a project and believe members of the city council and local citizens will be amazed and impressed by the final product built by this innovative company.

Sincerely,

Joe Crews
Architect

Attachment: Shipp Outdoor - Ltrs of Supt (Ord. 2014-052) (1091 : Ord. 2014-052 - SUP for billboard at 2506 Richmond Road)

Ta Molly's
MEXICAN KITCHEN

TaMolly's is very satisfied with the digital billboard exposure in Texarkana and are currently rotating on three digital bill boards. A digital billboard on Richmond Road would greatly benefit us as to direct traffic to our restaurant especially with the new road structure.

Debbie Powers

Attachment: Shipp Outdoor - Ltrs of Supt (Ord. 2014-052) (1091 : Ord. 2014-052 - SUP for billboard at 2506 Richmond Road)

5602 Richmond Road
Texarkana, TX 75503

City Council:

I am very much in support of Shipp Outdoor and their proposed location on Richmond Road. As a business owner located very far down Richmond Road in front of Minton's Sportsplex, it is vital to our store to have an opportunity to serve as many customers as possible and I believe the traffic we might be able to generate from I30 could make all the difference. I have been looking for effective marketing campaigns to help me get more traffic, I have no doubt this is my answer.

The type of technology that Shipp Outdoor brings to our city is first class and will help our city and businesses grow and prosper.

Sincerely,

Phillip Peek
Owner

Dear Council Members,

As a business located on Richmond Road but not at the immediate exit, I am very much in favor of Shipp Outdoor having a new digital sign that can help my store capture more business. The majority of people passing through through town and stopping to eat don't make it past the immediate area of the exit.

I believe pushing traffic to the backside of Richmond Road will help all restaurants and retail beyond the exit area. The farther back people travel, the more likely they are to shop or eat at more than one business and that turns into additional sales tax for Texarkana. I think this is a big win for our city.

Mike Cox
Owner
Wendy's

4/28/2014

TEXANA BANK

April 28, 2014

City Council
City Hall
Texarkana, TX

RE: Digital Billboard on Richmond Road

To whom it may concern:

Please accept this letter on behalf of Texana Bank and Shipp Outdoor. We are in support of the Shipp Outdoor proposal to place an electric sign on Richmond Road. We feel that it will be beneficial to businesses in the area and this type advertising will help direct customers north, where a number of new businesses have located.

Shipp Outdoor has invested its time and money with other billboards in the area and has a first class product. I would expect nothing but the same with this location. We are currently advertisers with Shipp Outdoor and we are very pleased with the product.

Thanks for allowing us to voice our support in this matter. Please feel free to contact me directly if any other information is needed.

Sincerely,

David White
Texarkana Market President
Texana Bank

ROADS • RAIL • WATER • LABOR
TEXARKANA
DO BUSINESS HERE.

Digital Billboard Facts

Legality

Scenic America believes digital billboards on federal aid roads violate the letter and spirit of the Highway Beautification Act, and has filed a lawsuit challenging a 2007 Federal Highway Administration ruling that deemed them permissible. For more information visit www.scenic.org/lawsuit.

Digital Billboard Prohibitions

In addition to Maine, Vermont, Alaska, Hawaii (which prohibit all billboards), the state of Montana and a growing number of cities prohibit them, including Houston, Denver, St. Louis and Kansas City. Grassroots citizen groups have worked to pass ballot initiatives prohibiting them in cities including San Francisco and Rapid City.

Traffic Safety

A growing body of evidence demonstrates that digital billboards pose a threat to traffic safety. A study by the Swedish government found that digital billboards took drivers' eyes off the road for significant periods of time and they subsequently ordered the removal of digital signs. Other studies from Denmark, Canada and Australia show similar concerns about digital billboard's impact on traffic safety. For more information visit www.scenic.org/safety.

Energy Usage

A 2010 study by urban planner Gregory Young found that in a 24-hour period a digital billboard uses the same amount of energy as 15 average U.S. homes. For more information visit www.scenic.org/energy.

Scenic America Billboard Fact Sheet

Attachment: Digital Billboard Facts (1091 : Ord. 2014-052 - SUP for billboard at 2506 Richmond Road)

Scenic Dallas

Scenic Dallas was established in 1999 as a chapter of Scenic Texas, a 501(c)(3) non-profit organization dedicated to fighting visual pollution, and to preserving and enhancing our city's visual environment.

PRESERVING AND ENHANCING OUR STATE'S VISUAL ENVIRONMENT

Recent News

- Scenic America files lawsuit seeking to overturn FHWA ruling on digital billboards
- Replacing Houston's Tree Canopy
- Billboard industry tries to discredit safety report
- Bridge to Connect Herman Park with Brays Bayou Pathway
- Scenic Houston Board Member Promotes Recreational Trails
- Billboard Companies in Dallas Sue TxDot
- Green Ribbon Planting Along I-35 in San Marcos
- Activists in Kyle, Texas protest the removal of a large number of trees
- Cognitive Benefits of City Parks
- Marble Falls Says No to Electronic Billboards

Archives

- February 2013
- January 2013
- November 2012
- October 2012
- September 2012
- August 2012
- July 2012
- May 2012
- April 2012
- March 2012
- February 2012
- January 2012
- December 2011
- November 2011
- October 2011
- September 2011
- August 2011
- July 2011
- May 2011
- March 2011

SCENIC DALLAS

MISSION

Our mission is to limit actions which have a harmful visual impact on our city and support public policies which promote scenic conservation and beautification, and provide education concerning the impact of visual pollution on our quality of life.

Scenic Dallas provides an educational tool and a voice for citizens of Dallas.

ACCOMPLISHMENTS

- **New Billboard Ban** enacted in 2000 by the Dallas City Council
- **Ongoing Enforcement** including the removal of billboards on SH190 (President George Bush Turnpike)
- **Green Ribbon Project Funds** totaling more than $1.8 million were allocated by the Texas Legislature to benefit Dallas for 2001-2003, and re-appropriated for that same amount for another two years for 2003-2005

GET INVOLVED

With your support, Scenic Dallas voices the concerns of Dallas citizens and those in its neighboring cities.

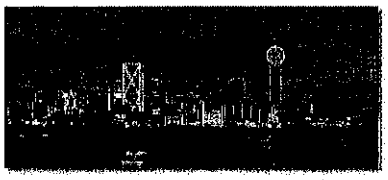

Attachment: Dallas Billboard ordinance (1091 : Ord. 2014-052 - SUP for billboard at 2506 Richmond Road)

ORDINANCE NO. 2014-052

Ordinance No. 2014-052 granting a Specific Use Permit to allow the location of a CEVMS (digital) billboard on a part of Tract 18, George Brinlee HRS, A-18, located at 2506 Richmond Road. Mark Liepman, owner. Chad Shipp, Shipp Outdoor, LLC, agent. (a 3/4 vote will be required by City Council to approve this item due to Planning and Zoning Commission denial).

DIGITAL BILLBOARD STUDY REPORT

Safety Impacts of the Emerging Digital Display Technology for Outdoor Advertising Signs

http://www.azmag.gov/Documents/pdf/cms.resource/NCHRP_Digital_Billboard_Report70216.pdf

Attachment: Ord. No. 2014-052 Digital Billboard Study Report Link [Revision 1] (1091 : Ord. 2014-052 - SUP for billboard at 2506 Richmond

Digital Sign by Shipp on Richmond Road

Attachment: Shipp Digital Sign at DQ on Richmond Updated 20140521 (1091 : Ord. 2014-

Fields of Visibility

Sign Orientation as was presented to Planning and Zoning Commission

Attachment: Shipp Digital Sign at DQ on Richmond Updated 20140521 (1091 : Ord. 2014-

Visibility Triangles with Richmond Road Orientation

Attachment: Shipp Digital Sign at DQ on Richmond Updated 20140521 (1091 : Ord. 2014-

Rule 21.143 – Permit Required

- **Except as provided by this chapter** [21], unless a person holds a permit issued under 21.164 of this division [Signs] (relating to Decision on Application) or 21.200 of this division (relating to local control), **the person may not erect or maintain an outdoor sign that is:**
- (1) **within 660 feet of the nearest edge of the right of way of a regulated highway** **if any part of the sign's advertising or information content is visible from any place on the main-traveled way of the highway**, or
- (2) outside of the jurisdiction of an incorporated city and more than 660 feet from the nearest edge of right of way of a regulated highway if any part of the sign's advertising or information content is visible for the main-traveled way of the highway and the sign was erected for the purpose of having its advertising or information content seen from the main-traveled way of the highway.

Attachment: Shipp Digital Sign at DQ on Richmond Updated 20140521 (1091 : Ord. 2014-

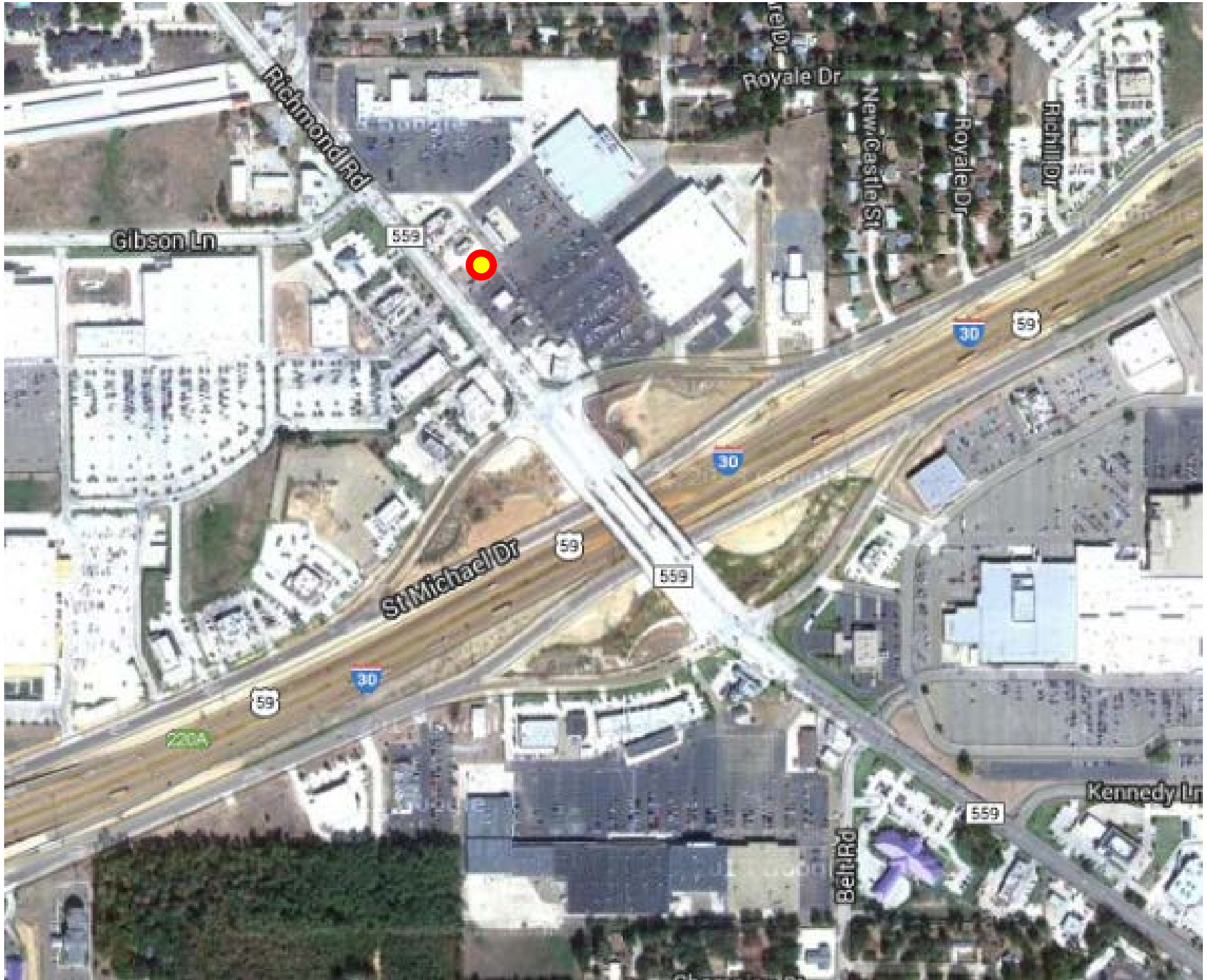

Attachment: Shipp Digital Sign at DQ on Richmond Updated 20140521 (1091 : Ord. 2014-

Attachment: Shipp Digital Sign at DQ on Richmond Updated 20140521 (1091 : Ord. 2014-

West bound on Saint Michael Drive and I-30 the sign location becomes visible as the vehicle passes the Good Will location and remains visible about 8 seconds before reaching Richmond Road.

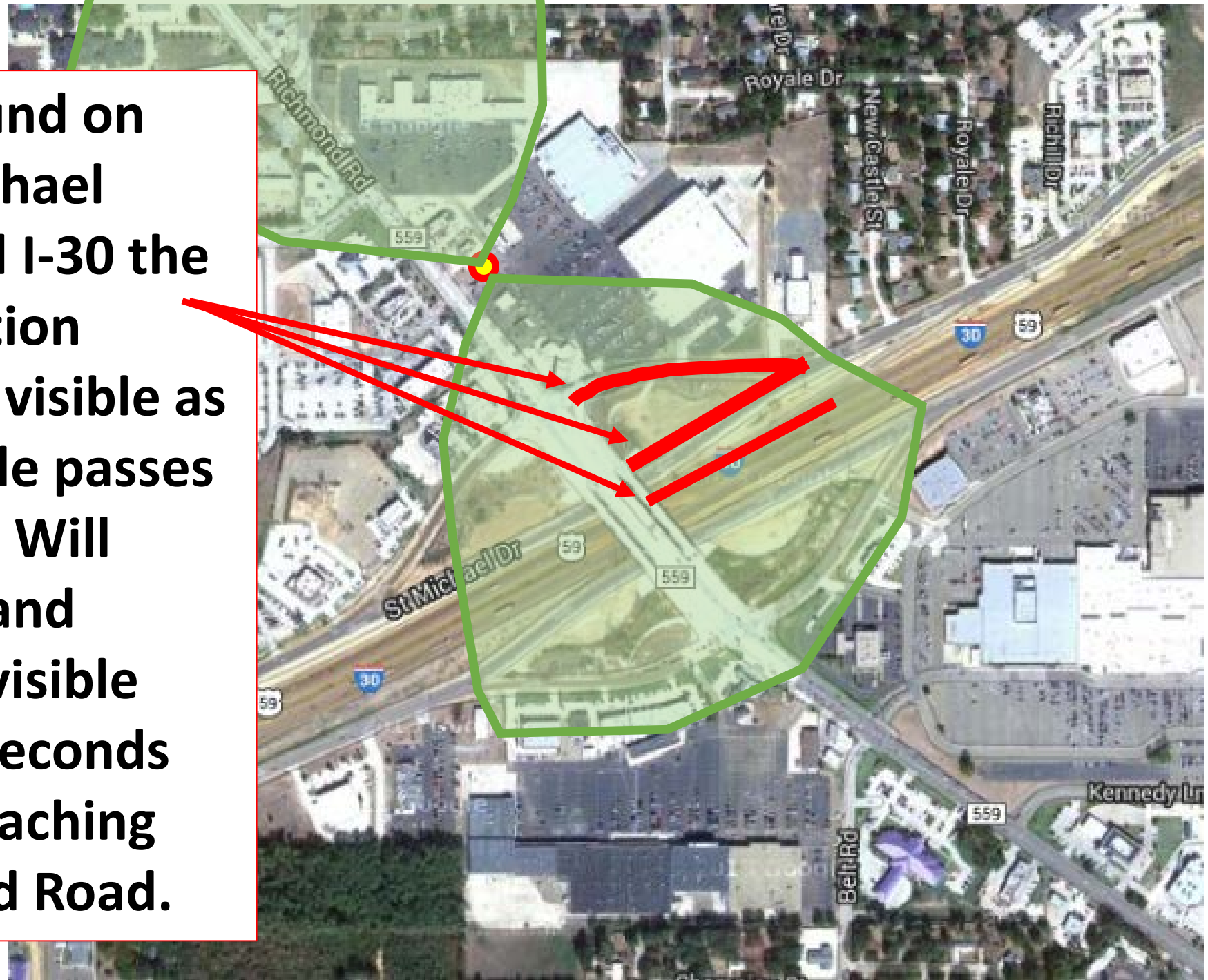

Attachment: Shipp Digital Sign at DQ on Richmond Updated 20140521 (1091 : Ord. 2014-

East bound on Mall Drive and I-30 the sign location becomes visible as the vehicle passes the Billy Sims BBQ location and remains visible about 8 seconds before reaching Richmond Road.

Attachment: Shipp Digital Sign at DQ on Richmond Updated 20140521 (1091 : Ord. 2014-

What about all those other signs?

Attachment: Shipp Digital Sign at DQ on Richmond Updated 20140521 (1091 : Ord. 2014-

What about all those other signs?

- The other signs in the area are exempt from the rule because they are on-premise signs versus being an off-premise sign (billboard)

Attachment: Shipp Digital Sign at DQ on Richmond Updated 20140521 (1091 : Ord. 2014-

Rule 21.146 – Exempt Signs

- (a) The **following signs are exempt** from this division [Signs]
  - (1) **an on-premise sign that meets the criteria provided in 21.147 of this division (relating to on-premise sign) except as provided by subsection (c) of this section**;
  - (2) a sign that has the purpose of protecting life or property;
  - (3) a sign that provides information about underground utility lines;
  - (4) an official sign that is erected by a public officer, public agency, or political subdivision under the officer's, agency's, or political subdivision's constitutional or statutory authority;
  - (5) a sign required by the Railroad Commission of Texas at the principal entrance to or on each oil or gas producing property, well, tank, or measuring facility to identify or to locate the property if the sign is no larger than necessary to comply with the Railroad Commission regulations;

Attachment: Shipp Digital Sign at DQ on Richmond Updated 20140521 (1091 : Ord. 2014-

Rule 21.146 – Exempt Signs (cont)

- (6) a sign of a nonprofit service club, charitable association, religious organization, chamber of commerce, nonprofit museum, or governmental entity, other than an entity to which paragraph (8) of this subsection applies, that gives information about the meetings, services, events, or locations of the entity and that does not exceed an area of 32 square feet;
- (7) a public service sign that:
  - (A) is located on a school bus stop seating bench or shelter;
  - (B) identifies the donor, sponsor, or contributor of the shelter;
  - (C) contains a public service message that occupies at least 50 percent of the area of the sign
  - (D) has no content other than that described by subparagraphs (B) and (C) of this paragraph
  - (E) is authorized or approved by the law of the entity that controls the highway involved, including being located at a place approved by the entity;
  - (F) has a sign face that does not exceed an area of 32 square feet; and
  - (G) is not facing the same direction as any other sign on the seating bench or shelter

Attachment: Shipp Digital Sign at DQ on Richmond Updated 20140521 (1091 : Ord. 2014-

Rule 21.146 – Exempt Signs (cont)

- (8) a sign that is erected and maintained by a public school, a college or university, or a nonprofit agricultural fair, but only if the information presented on the sign is limited to information about the meetings, services, events, or on premise activities of the entity, and the total area of the sign's face facing a particular direction of travel does not exceed 200 square feet.
- (9) a sign that shows only the name of a ranch on which livestock are raised or a farm on which crops are grown, and the directions to, telephone number, or internet address of the ranch or farm, and that has a sign face that does not exceed an area of 32 square feet;
- (10) a sign that:
  - (A) relates only to a public election;
  - (B) is located on private property;
  - (C) is erected after the 91st day before the date of the election and is removed before the 11th day after the election date;
  - (D) has a sign face that does not exceed an area of 50 square feet; and
  - (E) contains no commercial endorsement; and

Attachment: Shipp Digital Sign at DQ on Richmond Updated 20140521 (1091 : Ord. 2014-

Rule 21.146 – Exempt Signs (cont)

- (11) a sign identifying the name of a recorded subdivision located at an entrance to the subdivision or on property owned by or assigned to the subdivision, home owners association, or other entity associated with the subdivision.
- (b) This division does not apply to a sign that was erected before October 23, 1965 and that the commission, with the approval of the Secretary of the United States Department of Transportation, has determined to be a landmark sign of such historic or artistic significance that preservation would be consistent with the purposes of the Highway Beautification Act of 1965, 23 United States Code 131.
- (c) An on-premise sign cannot erected earlier than one year before the date that the business for which the sign is erected will open and conduct business.

Attachment: Shipp Digital Sign at DQ on Richmond Updated 20140521 (1091 : Ord. 2014-

Will TxDOT Issue the Permit?

- Unknown at this time
- Spacing between signs is the next consideration

Attachment: Shipp Digital Sign at DQ on Richmond Updated 20140521 (1091 : Ord. 2014-

Rule 21.187 – Spacing of Signs

- (a) **Permitted signs on the same side of regulated freeway, including frontage roads, may not be erected closer than 1,500 feet apart.**
- (b) For a highway on a non-freeway primary system and outside the incorporated boundaries of a municipality, permitted signs on the same side of the highway may not be erected closer than 750 feet apart.
- (c) For a highway on a non-freeway primary system highway and within the incorporated boundaries of a municipality, permitted signs on the same side of the highway may not be erected closer than 300 feet apart.
- (d) For the purposes of this section, the space between signs is measured between points along the right of way of the highway perpendicular to the center of the signs.

Attachment: Shipp Digital Sign at DQ on Richmond Updated 20140521 (1091 : Ord. 2014-

Rule 21.187 – Spacing of Signs (cont)

- (e) For the purpose of this section, a municipality's extraterritorial jurisdiction is not considered to be included within the boundaries of the municipality.
- (f) This section does not apply to directional signs, on premise signs, or official signs that are exempted from the application of Transportation Code, 391.031.
- (g) **The spacing requirements of this section do not apply to signs separated by buildings, natural surroundings, or other obstruction in a manner that causes only one of the signs to be visible within the specified spacing area.**

Attachment: Shipp Digital Sign at DQ on Richmond Updated 20140521 (1091 : Ord. 2014-

Rule 21.187 – Spacing of Signs (cont)

- (h) A permitted sign may not be erected within five feet of the highway right of way. The distance shall be measured from the end of the sign face nearest the right of way line.
- (i) A permitted sign that is being displaced by a highway construction project will not be considered in determining the spacing for a new sign application.

Attachment: Shipp Digital Sign at DQ on Richmond Updated 20140521 (1091 : Ord. 2014-

Map
Traffic
Royale Dr
Holly Ln
New Castle St
New Castle
Richmond Rd
30
30
59

Attachment: Shipp Digital Sign at DQ on Richmond Updated 20140521 (1091 : Ord. 2014-

Attachment: Shipp Digital Sign at DQ on Richmond Updated 20140521 (1091 : Ord. 2014-

Are the two signs visible at the same time?

- (g) **The spacing requirements of this section do not apply to signs separated by buildings, natural surroundings, or other obstruction in a manner that <u>causes only one of the signs to be visible within the specified spacing area</u>.**

Attachment: Shipp Digital Sign at DQ on Richmond Updated 20140521 (1091 : Ord. 2014-

Richmond Rd
Richmond Rd
New Ca
30
59
200 ft
50 m
Imagery ©2014 Google, Map data ©2014 Google
Edit in Google Map Maker
Report a problem

Richmond Rd
Richmond Rd
New Ca
30
59
200 ft
50 m
Imagery ©2014 Google, Map data ©2014 Google
Edit in Google Map Maker
Report a problem

Can the City Require TxDOT Permit First?

Attachment: Shipp Digital Sign at DQ on Richmond Updated 20140521 (1091 : Ord. 2014-

Can the City Require TxDOT Permit First?

- Rule 21.159 Permit Application
- Section (c) states if the sign is to be located within the jurisdiction of a municipality, including the extraterritorial jurisdiction of the municipality, that is exercising its authority to regulate outdoor advertising, a certified copy of the permit issued by the municipality must be submitted with the application unless documentation is provided to **show that the municipality requires: (1) the issuance of a department permit before the municipality's**; or (2) the erection of the sign within a period of less than twelve months after the date of the issuance of the municipal permit.

Attachment: Shipp Digital Sign at DQ on Richmond Updated 20140521 (1091 : Ord. 2014-

City of Texarkana, Texas

Version: I

Briefing Sheet

Update Date: 6/19/2014 10:24 AM

Lead Department: Public Works **Action Officer:** Debbie Burk,

Subject: Ordinance No. 2014-069 amending the University Planned Development District (UPDD) of the Zoning Ordinance to amend allowed uses in Area 8 along Richmond Road by adding the use of a landscape maintenance business with outdoor display sales and equipment. Jerry Clanton, owner. Andrea Freeman, agent. (Due to Planning and Zoning Commission denial, a 3/4 vote by the City Council is required to approve this request).

Briefing: 7/14/2014	**Public Hearing:** 6/9/2014	**Second Briefing:** June 23, 2014	**Council Vote:** 7/14/2014

Item Schedule
Schedule 1: Brief twice - vote once (six weeks)

Updates/History of Briefing:

None applicable

Executive Summary and Background Information:

This is a request by Jerry Clanton, owner, and Andrea Freeman representing Freeman Design and Consultation, agent, to amend the University Planned Development District (UPDD) guidelines in Area 8 to allow the additional use of a landscape maintenance business that includes an office, maintenance equipment, outside storage and display of plants and material, stone, fountains, etc. The location for the proposed business is in an existing building at 6300 Richmond Road.

According to the UPDD guidelines, the following uses are allowed in the "Richmond Road Mixed Use Development Area 8":

a. Fast Food Eateries
b. Gas stations
c. Townhomes
d. Day Care Facility Neighborhood Health Center

Richmond Road Mixed Use Development Area 8 also allows the uses in Area 3 (Retail and Mixed Uses) which include:

Schools, Banks/Financial Service, Restaurants, Offices, Mixed Use Multi-level Retail, (office and upper floor condominiums), Department Stores, Coffee or Bakery Shops, Medical Clinics (7500 sq. foot max), Retail Shops under 10,000 sq. foot, Single Family Residences

It should be noted that an existing car wash and feed store/plant greenhouse that were established businesses when the UPDD was created are now considered non-conforming uses of the UPDD. These uses are allowed to remain but would not be allowed as new uses.

Potential Options:

Approve or deny this request to amend the uses allowed in Area 8 of the UPDD.

Approve the request to add this additional use that requires an enclosed (all sides) screening requirement for the outside storage associated with this use to be located behind the main structure in the rear yard of the property. This screening requirement shall be an eight foot privacy fence with brick or stone(exterior) or a combination of brick/stone exterior columns, no more than 20 feet between columns, with a stained wood/ vinyl fencing. All gates to match fence materials.

Fiscal Implications:

None

Staff Recommendation:

Staff has determined that the requested use of a landscape maintenance business with outside storage and display does not fall within the perimeter of retail uses set for Area 8 in the UPDD guidelines. Staff informed the applicant that only office and design consulting could be operated at this location in the UPDD.
In looking at the overall UPDD and district uses, Area 8, Richmond Road, is perceived as a main entry into the UPDD district. Retail use as well as office use was the targeted type business desired for this gateway. Consideration was given for existing residential uses in conjunction with the University and an elementary school in the area. Outdoor sales and storage of equipment and materials was considered not a desirable use in this corridor. Also, no auto dealerships with vehicles for sale were allowed in this Area 8 district. Due to these factors, the staff recommends for denial of this request to add this additional use.

Advisory Board/Committee Review:

Planning and Zoning Commission

Board/Committee Recommendation:

The Planning and Zoning Commission at their meeting on May 5, 2014 recommended for denial with 4 members voting against the request and 1 member abstaining from voting. Due to Planning and Zoning Commission denial, a 3/4 vote by the City Council is required to approve this request.

Advisory Board/Committee Meeting Date and Minutes:

Attachments

a. Ord. # 2014-069 (DOCX)
b. Goals and Perspectives (DOCX)
c. Maps attachment for Ord. 2014-069 (PDF)
d. Ward map for Ord. 2014-069 (PDF)
e. 2014-069 Freeman Ltr & Photos (PDF)

Staff Coordination

City of Texarkana, Texas

Assistant City Manager	Shirley Jaster	Department Head Review	Completed	05/15/2014 10:14 AM
Public Information Officer	Lisa Thompson	PIO Review	Completed	05/15/2014 10:15 AM
City Manager	John Whitson	City Manager Review	Completed	05/15/2014 11:13 AM
City Council	Pam Burns	Meeting	Completed	06/18/2014 8:58 AM

Meeting History

05/27/14	City Council	MOVED FORWARD	Next: 06/09/14
06/09/14	City Council	MOVED FORWARD	Next: 06/23/14
06/23/14	City Council	MOVED FORWARD	Next: 07/14/14

Shirley Jaster spoke to this item. Councilmember Miller suggested alternative language to be used in the ordinance.

PUBLISH

ORDINANCE NO. 2014-069

AN ORDINANCE OF THE CITY COUNCIL OF THE CITY OF TEXARKANA, TEXAS, AMENDING THE ZONING ORDINANCE OF THE CITY OF TEXARKANA, TEXAS, BY AMENDING THE UNIVERSITY PLANNED DEVELOPMENT DISTRICT (UPDD), SECTION E. 8.) "USE REGULATIONS," "RICHMOND ROAD MIXED USE DEVELOPMENT" BY ADDING 'e. LANDSCAPE MAINTENANCE BUSINESS WITH OUTDOOR DISPLAY SALES AND EQUIPMENT'; PROVIDING FOR PUBLICATION; CONTAINING A REPEALER CLAUSE; CONTAINING A SEVERABILITY CLAUSE; AND ESTABLISHING AN EFFECTIVE DATE.

WHEREAS, the University Planned Development District (UPDD) was approved by Council by Ordinance No. 052-2012 on June 11, 2012; and

WHEREAS, a citizen has requested consideration to add the additional use of a landscape maintenance business with outdoor display sales and equipment in the UPDD; and

WHEREAS, the Planning and Zoning Commission of the City of Texarkana, Texas and the City Council of the City of Texarkana, Texas, in compliance with the laws of the State of Texas with reference to the granting of zoning classifications and changes, have given the requisite notices by publication and otherwise, and after holding hearings and affording a full and fair hearing to all property owners generally and to all persons interested and situated in the affected area and in the vicinity thereof; and

WHEREAS, after consideration of said application, the Planning and Zoning Commission of the City of Texarkana, Texas **voted by a vote of four (4) to zero (0), with one (1) member abstaining, to recommend for denial to allow the additional use of a landscape maintenance business with outdoor display sales and equipment** to the City Council of Texarkana, Texas; and

NOW, THEREFORE, BE IT ORDAINED BY THE CITY COUNCIL OF THE CITY OF TEXARKANA, TEXAS:

SECTION 1: That the City Council approves the amendment to the Zoning Ordinance of the City of Texarkana, Texas, by amending the University Planned Development District (UPDD) by adding the following to:

Section E. Use Regulations; 8.) Richmond Road Mixed Use Development:

e. Landscape maintenance business with outdoor display sales and equipment.

and

Section F. Building Design 5.) Screening and Fencing Requirements (b)

3. Outside storage for a Landscape maintenance business shall be screened with an eight foot fence with construction materials of brick or stone columns (maximum of

Attachment: Ord. # 2014-069 [Revision 3] (1122 : Ord No. 2014-069 Amendment to UPDD to add a business use in Area 8)

PUBLISH

20 feet between columns) and a wooden fence stained or painted to compliment the business. Gates for access to the area will match fence materials.

SECTION 2: That the City Secretary be and is hereby directed to publish the caption of this Ordinance for three (3) successive days in the Texarkana Gazette within ten (10) days of the passage of this Ordinance, as provided in Article XI, Section 3 of the Charter of the City of Texarkana, Texas.

SECTION 3: That in case a section, clause, sentence or part of this Ordinance shall be deemed or adjudged by a Court of competent jurisdiction to be invalid, then such invalidity shall not affect, impair or invalidate the remainder of this Ordinance.

SECTION 4: That all Ordinances or parts of Ordinances in conflict herewith are specifically repealed to the extent of such conflict.

SECTION 5: That this Ordinance, upon publication as provided herein, shall be in full force and effect ten (10) days after its passage and approval.

PASSED AND APPROVED in Regular Council Session on this the 14th day of July, 2014.

ATTEST:

_____ _____

JENNIFER EVANS, CITY SECRETARY BOB BRUGGEMAN, MAYOR

Attachment: Ord. # 2014-069 [Revision 3] (1122 : Ord No. 2014-069 Amendment to UPDD to add a business use in Area 8)

City of Texarkana, Texas

Developing Perspectives and Goals Pending Approval by the City Council:

Perspectives	Goals
Serve the Community	☑ Promote an Environmentally Sensitive & Livable Community ☐ Provide a Safe Community ☐ Deliver Quality Services ☐ Foster a Healthy Community
Run the Operations	☐ Enhance Community Preparedness & Responsiveness ☐ Maximize Partnership Opportunities ☐ Provide Courteous & Responsive Customer Service ☑ Model a Positive City Image ☐ Deliver Efficient Services ☐ Cultivate Community Involvement & Access
Manage the Resources	☐ Maintain Fiscal Strength ☐ Maximize Utilization & Resources ☐ Invest in Infrastructure & Transportation
Develop Personnel	☐ Develop a Skilled & Diverse Workforce ☐ Create a Positive & Rewarding Work Culture

Perspectives and Goals Additional Comments:

None

Resource Impact:

Staff time required if item is approved:	Select One By Clicking Here

Other Potential Impacts:

Public Information Plan:

☑	Newspaper Notice (Required by Statute)	☑	Public Hearing (Required by Statute)
☐	Public Forum/Input Session	☐	Press Release
☐	E-News Distribution	☑	Website Notice
☐	Social Media (Twitter, Facebook, etc.)	☑	Special Mailing
☐	Flyers Posted	☐	Banners Posted
☐	Survey	☐	Automated Phone Call
☐	None Required	☑	Sign posted

Other:

Attachment: Goals and Perspectives (1122 : Ord No. 2014-069 Amendment to UPDD to add a business use in Area 8)

Attachment: Maps attachment for Ord. 2014-069 (1122 : Ord No. 2014-069 Amendment to UPDD to add a business use in Area 8)

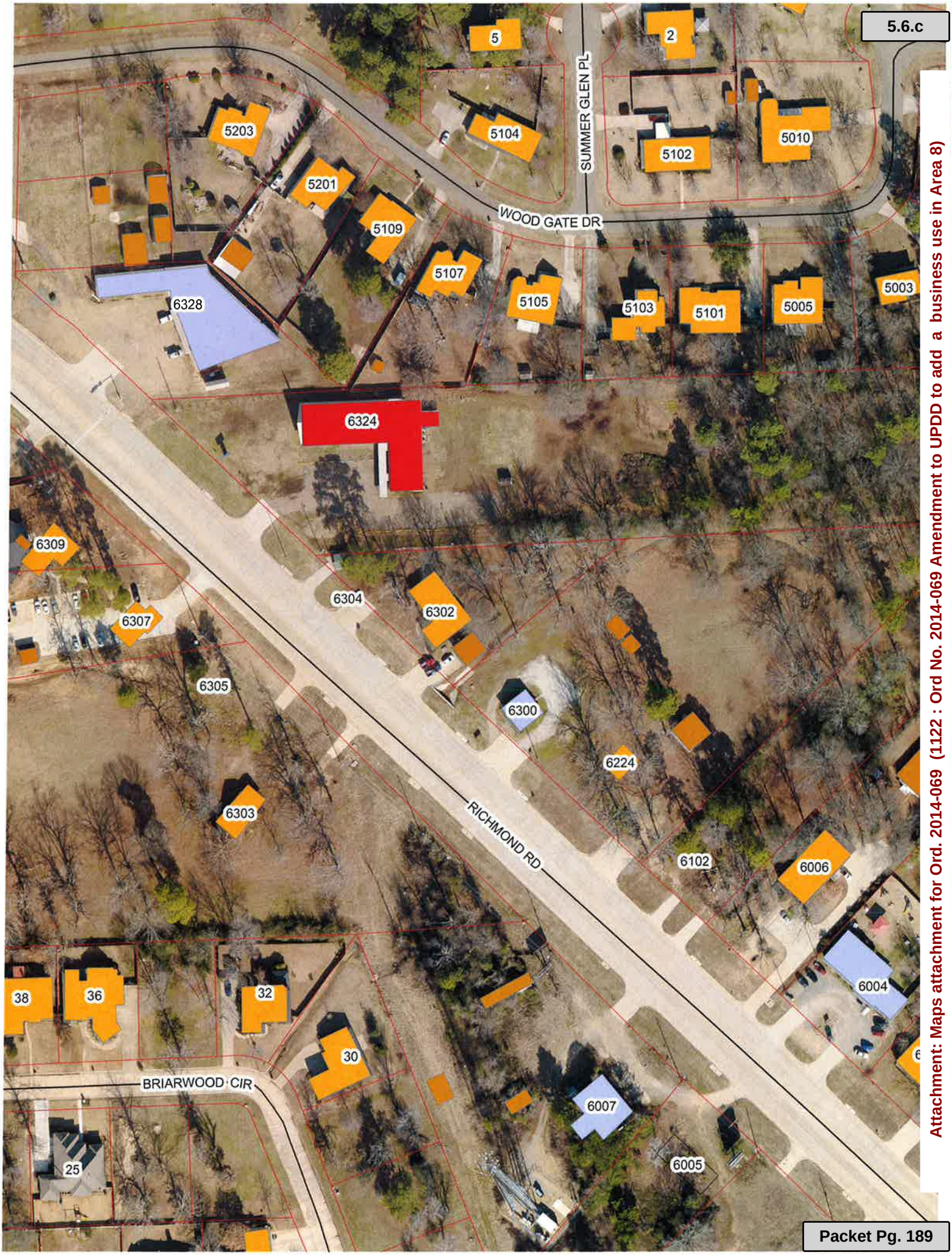

Attachment: Maps attachment for Ord. 2014-069 (1122 : Ord No. 2014-069 Amendment to UPDD to add a business use in Area 8)

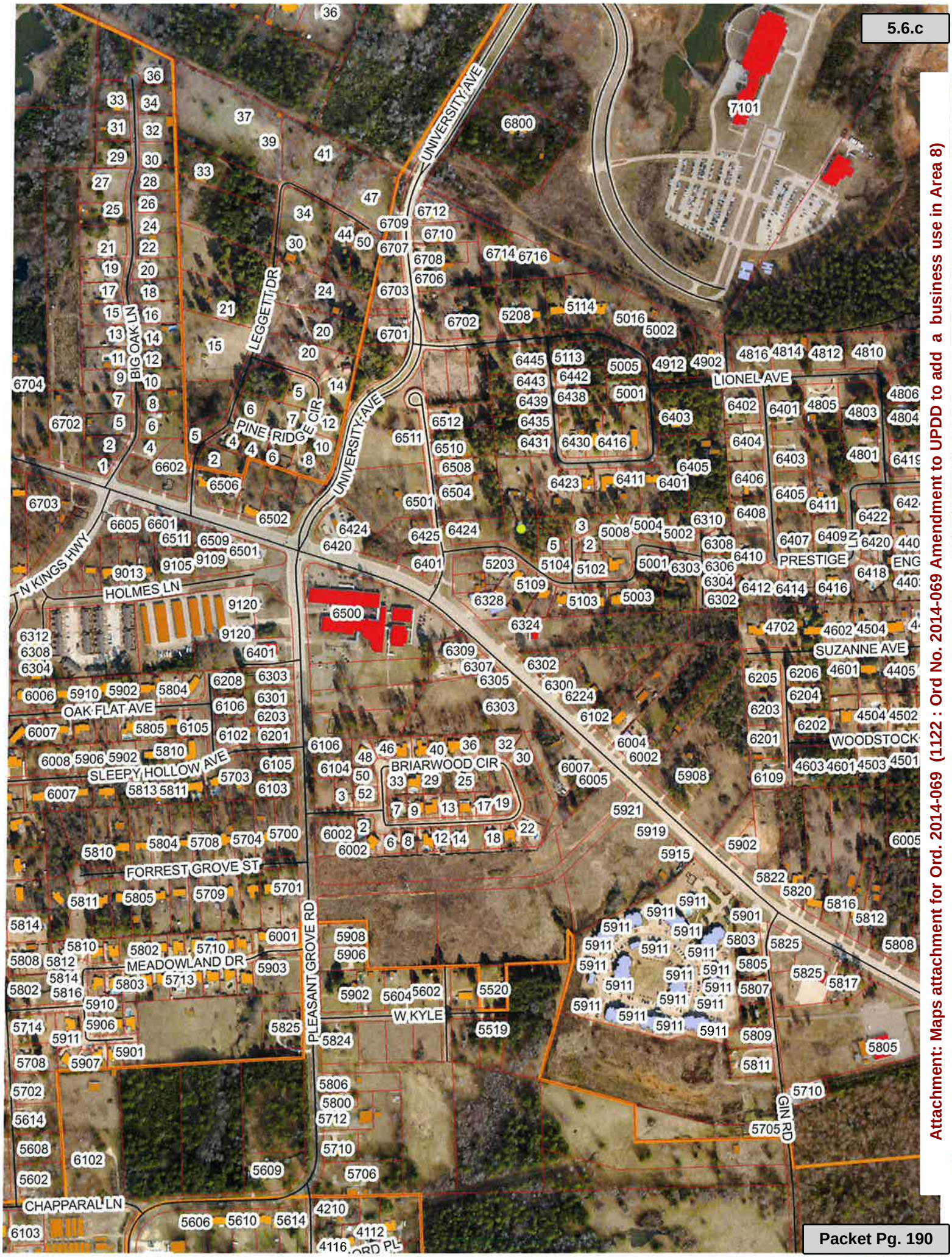

Attachment: Maps attachment for Ord. 2014-069 (1122 : Ord No. 2014-069 Amendment to UPDD to add a business use in Area 8)

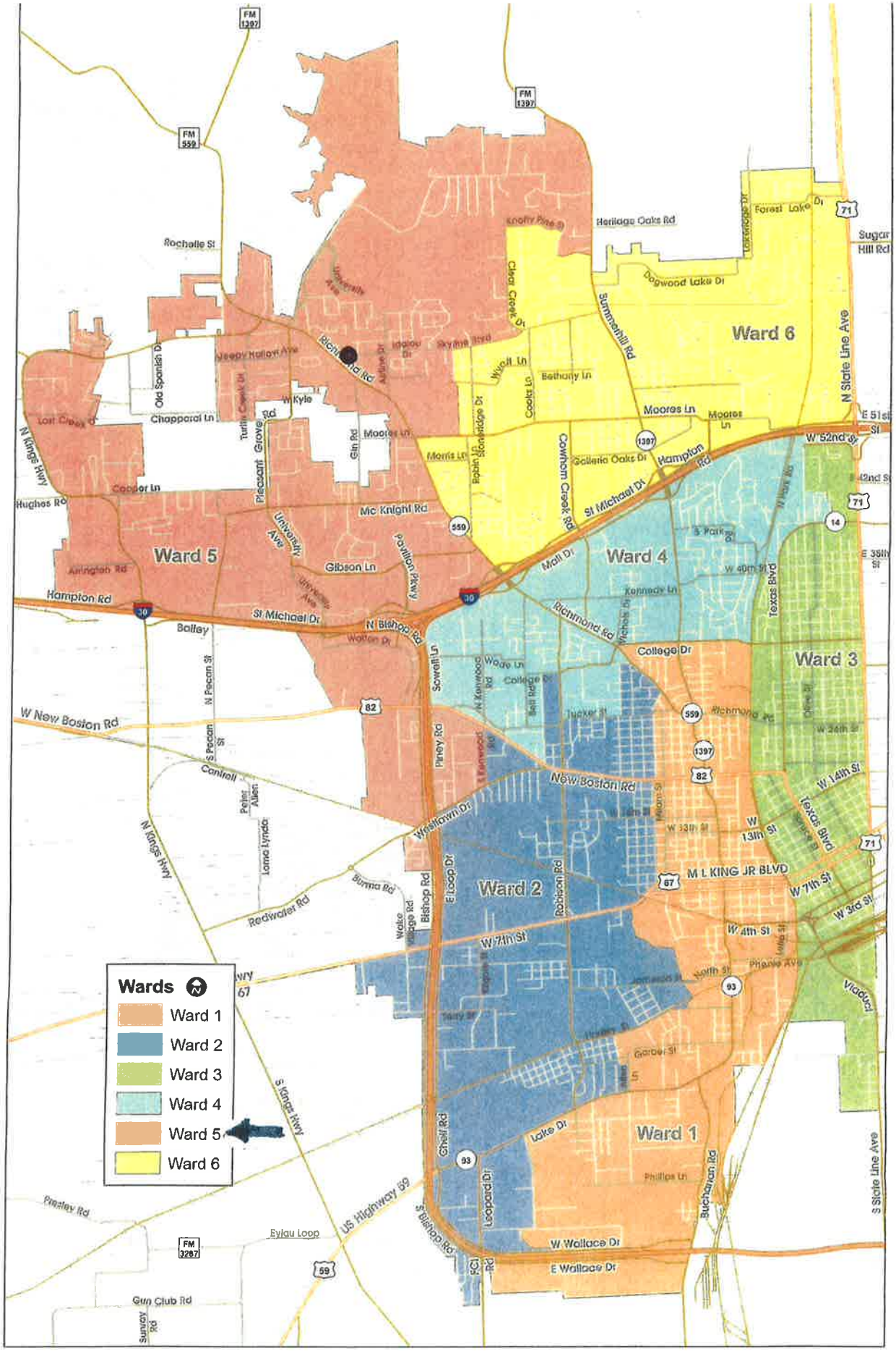

Attachment: Ward map for Ord. 2014-069 (1122 : Ord No. 2014-069 Amendment to UPDD to add a business use in Area 8)

FREEMAN
LANDSCAPE

6300 Richmond Road
Texarkana, Texas 75503
(903) 908.2883

Owners:
Brent & Lissa Freeman
ASLA, ANLA

Freeman Landscape would like to amend the uses allowed in the UPDD zoning district. We would like to amend them to allow landscape architecture design/build offices to be included. All trucks, equipment and materials would be kept behind an eight foot tall privacy fence at all times. The fence would meet all the standards that are already defined in the UPDD manual, as well as landscaping. The only time trucks and equipment would be visible would be when they are entering and exiting the property. Freeman Landscape has been in business in the Texarkana area since 1925. We have always been involved in community projects and always desired that Texarkana be a beautiful place for people to live and visit. We are in the beautification business and that is the image we want to have for our office and the entire city of Texarkana, Texas.

Thank you,

Brent & Lissa Freeman

Attachment: 2014-069 Freeman Ltr & Photos (1122 : Ord No. 2014-069 Amendment to UPDD to add a business use in Area 8)

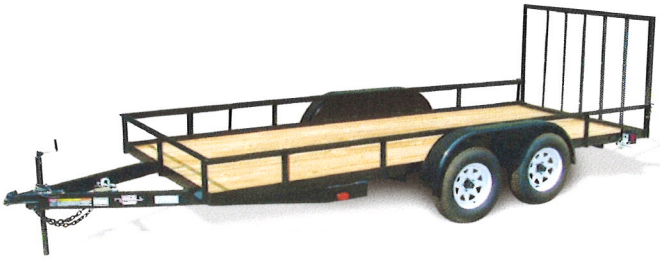

Attachment: 2014-069 Freeman Ltr & Photos (1122 : Ord No. 2014-069 Amendment to UPDD to add a business use in Area 8)

City of Texarkana, Texas

Version: F

Briefing Sheet

Update Date: 7/9/2014 11:29 AM

Lead Department: City Manager **Action Officer:** Pam Burns, Municipal Clerk

Subject: Resolution No. 2014-083 approving the creation of a Master Fee List for the City of Texarkana, Texas permits and fees.

Briefing: 7/14/2014 **Public Hearing:** 7/28/2014 **Second Briefing:** August 11, 2014 **Council Vote:** 8/25/2014

Item Schedule

Updates/History of Briefing:

NOT APPLICABLE

Executive Summary and Background Information:

With the recodification of the Code of Ordinances, the staff has been tasked to provide the fees and permit amounts to be included in a Master Fee List that can be placed on the City's website. This will remove all fees and permit amounts from our Code of Ordinances in order to better service the public. This will allow the public to go to the city website to find this information and remove it from our Code of Ordinances. Changing things in our Code of Ordinances is arduous and expensive. As a part of this process, the staff has included increases that reflect administrative and economic costs for current working situations. Including the cost of doing business in today's economy. These increases have been compare to other similar city fees and permits for a bench mark.

Potential Options:

Fiscal Implications:

Additional Revenue

Staff Recommendation:

Recommended by staff to keep a balance with rising costs.

Advisory Board/Committee Review:

NONE

Board/Committee Recommendation:

N/A

Advisory Board/Committee Meeting Date and Minutes:

N/A

Attachments

a. Goals and Perspectives (DOCX)

b. 2014-83 Master Fee List (DOC)
c. FY15 Fees and Charges Version 20140710.pdf (PDF)

Staff Coordination

City Secretary	Jennifer Evans	Review	Completed	07/09/2014 11:49 AM
City Manager	John Whitson	Department Head Review	Pending	
Finance Department		Finance Review	Pending	
Public Information Officer			PIO Review	Pending
City Manager		City Manager Review	Pending	
City Council	Pam Burns	Meeting	Pending	

Meeting History

City of Texarkana, Texas

Developing Perspectives and Goals Pending Approval by the City Council:

Perspectives	Goals
Serve the Community	☐ Promote an Environmentally Sensitive & Livable Community ☐ Provide a Safe Community ☑ Deliver Quality Services ☐ Foster a Healthy Community
Run the Operations	☐ Enhance Community Preparedness & Responsiveness ☐ Maximize Partnership Opportunities ☑ Provide Courteous & Responsive Customer Service ☑ Model a Positive City Image ☑ Deliver Efficient Services ☑ Cultivate Community Involvement & Access
Manage the Resources	☐ Maintain Fiscal Strength ☐ Maximize Utilization & Resources ☐ Invest in Infrastructure & Transportation
Develop Personnel	☐ Develop a Skilled & Diverse Workforce ☐ Create a Positive & Rewarding Work Culture

Perspectives and Goals Additional Comments:

NONE

Resource Impact:

Staff time required if item is approved:	Low

Other Potential Impacts:

NONE

Public Information Plan:

☐	Newspaper Notice (Required by Statute)	☐	Public Hearing (Required by Statute)
☐	Public Forum/Input Session	☐	Press Release
☑	E-News Distribution	☑	Website Notice
☑	Social Media (Twitter, Facebook, etc.)	☐	Special Mailing
☐	Flyers Posted	☐	Banners Posted
☐	Survey	☐	Automated Phone Call
☐	None Required	☐	

Other:

Attachment: Goals and Perspectives [Revision 1] (1141 : Res. No. 2014-083 Master Fee List Approval)

RESOLUTION NO. 2014-083

A RESOLUTION OF THE CITY COUNCIL OF THE CITY OF TEXARKANA, TEXAS, APPROVING THE CREATION OF A MASTER FEE LIST FOR THE CITY'S WEBSITE UNDER THE DIRECTION OF THE CITY MANAGER; AND ESTABLISHING AN EFFECTIVE DATE.

WHEREAS, with the forthcoming recodification of the City of Texarkana, Texas Code of Ordinances, the staff has been tasked to provide the fees and permit amounts to be included in a Master Fee List that can be placed on the City's website for the convenience of the citizens; and

WHEREAS, as a part of that process, the staff, with comparison studies, has included increases in areas that reflect administrative and economic costs for current working situations in today's economy; and

WHEREAS, due to the expense and the arduous process for changing the Code of Ordinances, it is deemed in the best interest of the public to remove all references to the fees and permit amounts to one central location, under the City Manager's direction, to be posted on the City's website, effective October 1, 2014, as a Master Fee List (Exhibit "A");

NOW, THEREFORE, BE IT RESOLVED BY THE CITY COUNCIL OF THE CITY OF TEXARKANA, TEXAS:

SECTION 1: That in the best interest of the citizens and the public resources, the City of Texarkana, Texas Master Fee List (Exhibit "A") is hereby approved as presented and made effective October 1, 2014.

SECTION 2: That the City Manager shall direct the process of collection for the fees and permit amounts listed in the City's Master Fee List which shall be posted on the City's website.

SECTION 3: That this Resolution shall be in full force and effect from and after its passage and approval.

PASSED AND APPROVED in Regular Council Session on this the 11th day of August, 2014.

ATTEST:

_____ _____

JENNIFER EVANS, CITY SECRETARY BOB BRUGGEMAN, MAYOR

Attachment: 2014-83 Master Fee List [Revision 3] (1141 : Res. No. 2014-083 Master Fee List Approval)

Item Number	SERVICE/PERMIT	FY15 RATE	PER UNIT	OTHER INFORMATION	OFFICE	LOCATION	TELEPHONE
1	Extraordinary Event Cost Recovery Fee			An invoice may be sent by the City to any individual, organization or entity to recapture the cost of staff time, materials and supplies, and other costs related to an event, item or activity which is not considered a service provided to the general population in the normal and ordinary course of the City's operation.	All Departments/Offices		
2	Returned Checks	$30.00	Each check	NSF –Non-Sufficient Funds	All Departments/Offices		
3	Coin Operated Machine Permit	$15.00	Per Coin Operated Machine	Maximum $100.00	City Secretary	City Hall – Municipal Building – 220 Texas Boulevard	903-798-3900
4	Special Event Permit	No Charge			Administration	City Hall – Municipal Building – 220 Texas Boulevard	903-798-3900
5	Daily Special Event Permit	No Charge			Administration	City Hall – Municipal Building – 220 Texas Boulevard	903-798-3900
6	Transient Dealer Precious Metal Permit	$250.00	Each	For 30 Days	Administration	City Hall – Municipal Building – 220 Texas Boulevard	903-798-3900
7	Alcoholic Beverage Permit: Beer Off-Premise	$30.00	Each	Bi-Annual Permit at same time as state permit application/renewal	Administration	City Hall – Municipal Building – 220 Texas Boulevard	903-798-3900
8	Alcoholic Beverage Permit: Wine & Beer Off-Premise	$30.00	Each	Bi-Annual Permit at same time as state permit application/renewal	Administration	City Hall – Municipal Building – 220 Texas Boulevard	903-798-3900
9	Alcoholic Beverage Permit: Beer On-Premise	$75.00	Each	Bi-Annual Permit at same time as state permit application/renewal	Administration	City Hall – Municipal Building – 220 Texas Boulevard	903-798-3900
10	Alcoholic Beverage Permit: Wine & Beer Retailer	$87.50	Each	Bi-Annual Permit at same time as state permit application/renewal	Administration	City Hall – Municipal Building – 220 Texas Boulevard	903-798-3900
11	Alcoholic Beverage Permit: Wine & Beer Retailer On-Premise Late Hours	$125.00	Each	Bi-Annual Permit at same time as state permit application/renewal	Administration	City Hall – Municipal Building – 220 Texas Boulevard	903-798-3900
12	Alcoholic Beverage Permit: Package Store	$250.00	Each	Bi-Annual Permit at same time as state permit application/renewal	Administration	City Hall – Municipal Building – 220 Texas Boulevard	903-798-3900
13	Alcoholic Beverage Permit: Wine Only Package Store	$37.50	Each	Bi-Annual Permit at same time as state permit application/renewal	Administration	City Hall – Municipal Building – 220 Texas Boulevard	903-798-3900
14	Alcoholic Beverage Permit: General Class B Wholesaler	$150.00	Each	Bi-Annual Permit at same time as state permit application/renewal	Administration	City Hall – Municipal Building – 220 Texas Boulevard	903-798-3900
15	Alcoholic Beverage Permit: Importer's License	$10.00	Each	Bi-Annual Permit at same time as state permit application/renewal	Administration	City Hall – Municipal Building – 220 Texas Boulevard	903-798-3900
16	Alcoholic Beverage Permit: Importer's Carrier's License	$10.00	Each	Bi-Annual Permit at same time as state permit application/renewal	Administration	City Hall – Municipal Building – 220 Texas Boulevard	903-798-3900
17	Alcoholic Beverage Permit: Beer Manufacturer's License	$375.00	Each	Bi-Annual Permit at same time as state permit application/renewal	Administration	City Hall – Municipal Building – 220 Texas Boulevard	903-798-3900
18	Alcoholic Beverage Permit: Brewer	$750.00	Each	Bi-Annual Permit at same time as state permit application/renewal	Administration	City Hall – Municipal Building – 220 Texas Boulevard	903-798-3900
19	Alcoholic Beverage Permit: Local Distributor (to sell to private clubs)	$50.00	Each	Bi-Annual Permit at same time as state permit application/renewal	Administration	City Hall – Municipal Building – 220 Texas Boulevard	903-798-3900
20	Alcoholic Beverage Permit: Branch Distributor	$37.50	Each	Bi-Annual Permit at same time as state permit application/renewal	Administration	City Hall – Municipal Building – 220 Texas Boulevard	903-798-3900
21	Alcoholic Beverage Permit: Wholesaler	$937.50	Each	Bi-Annual Permit at same time as state permit application/renewal	Administration	City Hall – Municipal Building – 220 Texas Boulevard	903-798-3900
22	Alcoholic Beverage Permit: Public Storage	$50.00	Each	Bi-Annual Permit at same time as state permit application/renewal	Administration	City Hall – Municipal Building – 220 Texas Boulevard	903-798-3900
23	Alcoholic Beverage Permit: Beverage Cartage	$10.00	Each	Bi-Annual Permit at same time as state permit application/renewal	Administration	City Hall – Municipal Building – 220 Texas Boulevard	903-798-3900
24	Alcoholic Beverage Permit: Private Carrier	$15.00	Each	Bi-Annual Permit at same time as state permit application/renewal	Administration	City Hall – Municipal Building – 220 Texas Boulevard	903-798-3900
25	Alcoholic Beverage Permit: Package Store Tasting	$12.50	Each	Bi-Annual Permit at same time as state permit application/renewal	Administration	City Hall – Municipal Building – 220 Texas Boulevard	903-798-3900

Item Number	SERVICE/PERMIT	FY15 RATE	PER UNIT	OTHER INFORMATION	OFFICE	LOCATION	TELEPHONE
26	Alcoholic Beverage Permit: Mixed Beverage Restaurant	$375.00	Each	Bi-Annual Permit at same time as state permit application/renewal (collect 3rd year and after issuance of license)	Administration	City Hall – Municipal Building – 220 Texas Boulevard	903-798-3900
27	Alcoholic Beverage Permit: Mixed Beverage Late Hours	$75.00	Each	Bi-Annual Permit at same time as state permit application/renewal	Administration	City Hall – Municipal Building – 220 Texas Boulevard	903-798-3900
28	Open Records Information: Copies (letter & legal)	$0.10	Per Page		Administration	City Hall – Municipal Building – 220 Texas Boulevard	903-798-3900
29	Open Records Information: Copies over 50 pages	$0.10	Per Page	Plus Labor charge prorated and overhead charge	Administration	City Hall – Municipal Building – 220 Texas Boulevard	903-798-3900
30	Open Records Information: Copies (Oversize 11" x 17")	$0.50	Each		Administration	City Hall – Municipal Building – 220 Texas Boulevard	903-798-3900
31	Open Records Information: Computer	$0.10	Per Page		Administration	City Hall – Municipal Building – 220 Texas Boulevard	903-798-3900
32	Open Records Information: Diskette	$1.00	Each		Administration	City Hall – Municipal Building – 220 Texas Boulevard	903-798-3900
33	Open Records Information: VHS video	$2.50	Each		Administration	City Hall – Municipal Building – 220 Texas Boulevard	903-798-3900
34	Open Records Information: Audio Cassette	$1.00	Each		Administration	City Hall – Municipal Building – 220 Texas Boulevard	903-798-3900
35	Open Records Information: CD	$1.00	Per clock hour		Administration	City Hall – Municipal Building – 220 Texas Boulevard	903-798-3900
36	Open Records Information: Maps/D Size	$2.00	Sheet paper		Administration	City Hall – Municipal Building – 220 Texas Boulevard	903-798-3900
37	Open Records Information: Maps/D Size	$3.00	Sheet film		Administration	City Hall – Municipal Building – 220 Texas Boulevard	903-798-3900
38	Open Records Information: Maps/E Size	$3.00	Sheet paper		Administration	City Hall – Municipal Building – 220 Texas Boulevard	903-798-3900
39	Open Records Information: Maps/E Size	$4.00	Sheet film		Administration	City Hall – Municipal Building – 220 Texas Boulevard	903-798-3900
40	Open Records Information: Other			Note: Any other charges for public information not listed will be as defined in Chapter III, Subchapter C of the Texas Administrative Code. When applicable, labor cost will be added to open records requests and will be billed at $15/hour plus a 20% overhead charge	Administration	City Hall – Municipal Building – 220 Texas Boulevard	903-798-3900
41	Dog & Cat Registration	$0.00	Per Pet		Environmental Services Unit	Bowie County Health Clinic, 902 W. 12th Street	903-798-3971
42	Dog & Cat Late Registration or Fail to Register	$25.00	Per Pet		Environmental Services Unit	Bowie County Health Clinic, 902 W. 12th Street	903-798-3971
43	Birth Certificates	$23.00	Each		Vital Statistics Office	City Hall – Municipal Building – 220 Texas Boulevard	903-798-3905
44	Death Certificates	$21.00	Each		Vital Statistics Office	City Hall – Municipal Building – 220 Texas Boulevard	903-798-3905
45	Death Certificates (additional copies)	$4.00	Each		Vital Statistics Office	City Hall – Municipal Building – 220 Texas Boulevard	903-798-3905
46	Abstract Poly Envelope	$2.00	Each		Vital Statistics Office	City Hall – Municipal Building – 220 Texas Boulevard	903-798-3905
47	Long Poly Envelope	$3.00	Each		Vital Statistics Office	City Hall – Municipal Building – 220 Texas Boulevard	903-798-3905
48	Mail Request: Shipping & Handling Fee	$2.00	Each		Vital Statistics Office	City Hall – Municipal Building – 220 Texas Boulevard	903-798-3905
49	Credit/debit card payment	$2.50	Each Transaction	In Addition to certificate fees	Vital Statistics Office	City Hall – Municipal Building – 220 Texas Boulevard	903-798-3905
50	Garage Sale Permit	$5.00	Each	3-day/max 2 per year	Vital Statistics Office	City Hall – Municipal Building – 220 Texas Boulevard	903-798-3905
51	Estate Sale	$20.00	Each	3-days/Max 2 per year	Vital Statistics Office	City Hall – Municipal Building – 220 Texas Boulevard	903-798-3905

Item Number	SERVICE/PERMIT	FY15 RATE	PER UNIT	OTHER INFORMATION	OFFICE	LOCATION	TELEPHONE
52	Itinerate Vendor Permit	$100.00	Each	10.00 each additional permit for same sales group. 1-year permit	Vital Statistics Office	City Hall – Municipal Building – 220 Texas Boulevard	903-798-3905
53	Incident Report Copies	$5.00	Per Report	Fire Department calls only	Fire Department	City Hall – Municipal Building – 220 Texas Boulevard	903-798-3994
54	Fire Inspection Service: Nursing Home	$150.00	Annual Fee	Includes two inspections performed semi-annually	Fire Department	City Hall – Municipal Building – 220 Texas Boulevard	903-798-3994
55	Fire Inspection Service: Day Care	$75.00	Annual Fee	Includes two inspections performed semi-annually	Fire Department	City Hall – Municipal Building – 220 Texas Boulevard	903-798-3994
56	Fire Inspection Service: Group Home	$75.00	Annual Fee	Includes two inspections performed semi-annually	Fire Department	City Hall – Municipal Building – 220 Texas Boulevard	903-798-3994
57	Fire Inspection Service: Hospital	$350.00	Annual Fee	Includes two inspections performed semi-annually	Fire Department	City Hall – Municipal Building – 220 Texas Boulevard	903-798-3994
58	Fire Inspection Service: First Re-Inspection	$50.00	Each		Fire Department	City Hall – Municipal Building – 220 Texas Boulevard	903-798-3994
59	Fire Inspection Service: Each Subsequent Re-Inspection	$100.00	Each		Fire Department	City Hall – Municipal Building – 220 Texas Boulevard	903-798-3994
60	Fire Inspection Service: After Hours Inspection (Minimum 2 hr.)	$75.00	Per hour		Fire Department	City Hall – Municipal Building – 220 Texas Boulevard	903-798-3994
61	Water Fill / Truck Only	$25.00	Per Order		Fire Department	City Hall – Municipal Building – 220 Texas Boulevard	903-798-3994
62	Fire Inspection Service: Home Safety Inspection	No Charge			Fire Department	City Hall – Municipal Building – 220 Texas Boulevard	903-798-3994
63	Fire Inspection Service: Foster Home Inspection	No Charge			Fire Department	City Hall – Municipal Building – 220 Texas Boulevard	903-798-3994
64	Permit: Fire Alarm Commercial	$100.00	Annual Fee		Fire Department	City Hall – Municipal Building – 220 Texas Boulevard	903-798-3994
65	Permit: Fire Alarm Residential	$50.00	Annual Fee		Fire Department	City Hall – Municipal Building – 220 Texas Boulevard	903-798-3994
66	Permit: Fixed Fire Extinguishing System	$75.00	Each		Fire Department	City Hall – Municipal Building – 220 Texas Boulevard	903-798-3994
67	Permit: Sprinkler/Standpipe	$75.00	Each		Fire Department	City Hall – Municipal Building – 220 Texas Boulevard	903-798-3994
68	Permit: Installation/Removal of UST's	$100.00	Each		Fire Department	City Hall – Municipal Building – 220 Texas Boulevard	903-798-3994
69	Permit: Open Burning (not recreational)	$1,000.00	Each		Fire Department	City Hall – Municipal Building – 220 Texas Boulevard	903-798-3994
70	Permit: Recreational Burning	$50.00	Each		Fire Department	City Hall – Municipal Building – 220 Texas Boulevard	903-798-3994
71	Permit: Fireworks	$100.00	Each		Fire Department	City Hall – Municipal Building – 220 Texas Boulevard	903-798-3994
72	Response: Hazardous Materials	110.00%	Replacement	Current Replacement cost of materials used	Fire Department	City Hall – Municipal Building – 220 Texas Boulevard	903-798-3994
73	Response: Technical Rescue	110.00%	Replacement	Current Replacement cost of materials used	Fire Department	City Hall – Municipal Building – 220 Texas Boulevard	903-798-3994
74	Inspection Service: Pool (each body of water)	$100.00	Annual Fee		Environmental Services Unit	Bowie County Health Clinic, 902 W. 12th Street	903-798-3263
75	Inspection Service: Pool Late Fee (each body of water)	$50.00	Each		Environmental Services Unit	Bowie County Health Clinic, 902 W. 12th Street	903-798-3263
76	Inspection Service: Pool 1st Re-inspection (each body of water)	$100.00	Each		Environmental Services Unit	Bowie County Health Clinic, 902 W. 12th Street	903-798-3263
77	Inspection Service: Pool Subsequent Re-inspections (each body of water)		Each	Increasing in $100.00 increments for each additional re-inspection	Environmental Services Unit	Bowie County Health Clinic, 902 W. 12th Street	903-798-3263
78	Inspection Service: Pool Complaint (each body of water)	$50.00	Each		Environmental Services Unit	Bowie County Health Clinic, 902 W. 12th Street	903-798-3263
79	Inspection Service: Pool Reinstatement (each body of water)	$100.00	Each		Environmental Services Unit	Bowie County Health Clinic, 902 W. 12th Street	903-798-3263

Item Number	SERVICE/PERMIT	FY15 RATE	PER UNIT	OTHER INFORMATION	OFFICE	LOCATION	TELEPHONE
80	Heath Service Inspection: Food Service w/1-5 employees	$275.00	Annual Fee		Environmental Services Unit	Bowie County Health Clinic, 902 W. 12th Street	903-798-3263
81	Health Service Inspection: Food Service w/6-10 employees	$300.00	Annual Fee		Environmental Services Unit	Bowie County Health Clinic, 902 W. 12th Street	903-798-3263
82	Health Service Inspection: Food Service w/11 or more employees	$325.00	Annual Fee		Environmental Services Unit	Bowie County Health Clinic, 902 W. 12th Street	903-798-3263
83	Health Service Inspection: Food Service each Public & Private School	$275.00	Annual Fee		Environmental Services Unit	Bowie County Health Clinic, 902 W. 12th Street	903-798-3263
84	Health Service Inspection: Food Service for each Non-Profit	$75.00	Annual Fee	Complaint Inspection, reinstatement & re-inspection fees apply	Environmental Services Unit	Bowie County Health Clinic, 902 W. 12th Street	903-798-3263
85	Health Service Inspection: Day Care Food Service	$100.00	Annual Fee	Per Day Care	Environmental Services Unit	Bowie County Health Clinic, 902 W. 12th Street	903-798-3263
86	Health Service Inspection: Day Care Non-Food Service	$50.00	Annual Fee	Per Day Care	Environmental Services Unit	Bowie County Health Clinic, 902 W. 12th Street	903-798-3263
87	Health Service Inspection: Foster Home	$40.00	Bi-annual		Environmental Services Unit	Bowie County Health Clinic, 902 W. 12th Street	903-798-3263
88	Health Service Inspection: Adoption	$40.00	Each		Environmental Services Unit	Bowie County Health Clinic, 902 W. 12th Street	903-798-3263
89	Health Service Inspection: Temporary Event	$50.00	Each		Environmental Services Unit	Bowie County Health Clinic, 902 W. 12th Street	903-798-3263
90	Health Service Inspection: Seasonal Permit	$100.00	Each		Environmental Services Unit	Bowie County Health Clinic, 902 W. 12th Street	903-798-3263
91	Health Service Inspection: Mobile Food Unit	$200.00	Annual Fee		Environmental Services Unit	Bowie County Health Clinic, 902 W. 12th Street	903-798-3263
92	Health Service Inspection: Late fee	$100.00	Each		Environmental Services Unit	Bowie County Health Clinic, 902 W. 12th Street	903-798-3263
93	Health Service Inspection: Complaint Inspection	$50.00	Each		Environmental Services Unit	Bowie County Health Clinic, 902 W. 12th Street	903-798-3263
94	Health Service Inspection: 1st Re-inspection	$100.00	Each		Environmental Services Unit	Bowie County Health Clinic, 902 W. 12th Street	903-798-3263
95	Health Service Inspection: Subsequent Re-inspections		Each	Increasing in $100.00 increments for each additional re-inspection	Environmental Services Unit	Bowie County Health Clinic, 902 W. 12th Street	903-798-3263
96	Health Service Inspection: Reinstatement	$150.00	Each		Environmental Services Unit	Bowie County Health Clinic, 902 W. 12th Street	903-798-3263
97	Health Service Inspection: Duplicate Permit	$20.00	Each		Environmental Services Unit	Bowie County Health Clinic, 902 W. 12th Street	903-798-3263
98	Copy: Texas Food Establishment Rules (picked up)	$25.00	Each		Environmental Services Unit	Bowie County Health Clinic, 902 W. 12th Street	903-798-3263
99	Copy: Texas Food Establishment Rules (mailed)	$30.00	Each		Environmental Services Unit	Bowie County Health Clinic, 902 W. 12th Street	903-798-3263
100	Immunization: Child Administrative Fee	$12.00	Per Visit	No Family Maximum - No charge for Texas Medicaid Children	Health Clinic	Bowie County Health Clinic, 902 W. 12th Street	903-798-3250
101	Immunization: Adult Administrative Fee	$15.00	Per Visit		Health Clinic	Bowie County Health Clinic, 902 W. 12th Street	903-798-3250
102	Copy: Shot Record	$2.00	Each		Health Clinic	Bowie County Health Clinic, 902 W. 12th Street	903-798-3250
103	Immunization: Private Purchase Flu vaccine	$20.00	Per Shot	Price subject to change	Health Clinic	Bowie County Health Clinic, 902 W. 12th Street	903-798-3250
104	Immunization: Private Purchase Pneumonia vaccine	$75.00	Per Shot	Price subject to change	Health Clinic	Bowie County Health Clinic, 902 W. 12th Street	903-798-3250

Item Number	SERVICE/PERMIT	FY15 RATE	PER UNIT	OTHER INFORMATION	OFFICE	LOCATION	TELEPHONE
105	Health Service: Pregnancy Testing	$10.00	Limited basis	Further Assistance Available	Health Clinic	Bowie County Health Clinic, 902 W. 12th Street	903-798-3250
106	Health Service: Tuberculosis Skin Test for Employment	$15.00	Per Test		Health Clinic	Bowie County Health Clinic, 902 W. 12th Street	903-798-3250
107	Health Service: Health Card Renewal	$10.00	Per Card		Health Clinic	Bowie County Health Clinic, 902 W. 12th Street	903-798-3250
108	Health Service: Blood Sugar (Finger Stick)	$10.00	Per Test		Health Clinic	Bowie County Health Clinic, 902 W. 12th Street	903-798-3250
109	Notary Fee	$5.00	Per Service		Human Resources Department	City Hall – Municipal Building – 220 Texas Boulevard	903-798-3917
110	Residential Building Permit (Base) - New Single Family, Duplex Dwelling, or Manufactured Home Up to and including 1,200 Square Feet	$500.00	Per Dwelling	Gross floor area served by either mechanical, plumbing or electrical systems and suitable for occupant's use within the inside perimeter of the exterior walls--to include garages, corridors, stairs, closets or other features, such as decks, porches, walk up attics, basements or bonus rooms	Inspections Department	City Hall – Municipal Building – 220 Texas Boulevard	903-798-3912
111	Residential Building Permit (Variable) - New Single Family, Duplex Dwelling, or Manufactured Home Over 1,200 Square Feet (Base + Variable)	$0.25	Per square foot over 1,200 SF	Gross floor area served by either mechanical, plumbing or electrical systems and suitable for occupant's use within the inside perimeter of the exterior walls--to include garages, corridors, stairs, closets or other features, such as decks, porches, walk up attics, basements or bonus rooms	Inspections Department	City Hall – Municipal Building – 220 Texas Boulevard	903-798-3912
112	Residential Building Permit - Additions (bedrooms, bathrooms, screened porch, sunrooms, and etc...) up to and including 400 square feet	$240.00	Per Addition		Inspections Department	City Hall – Municipal Building – 220 Texas Boulevard	903-798-3912
113	Residential Building Permit (Base) - Additions (bedrooms, bathrooms, screened porch, sunrooms, and etc...) exceeding 400 square feet up to an including 1,200 square feet	$500.00	Per Addition		Inspections Department	City Hall – Municipal Building – 220 Texas Boulevard	903-798-3912
114	Residential Building Permit (Variable) - Additions (bedrooms, bathrooms, screened porch, sunrooms, and etc...) exceeding 400 square feet up to an including 1,200 square feet (Base + Variable)	$0.25	Per square foot over 1,200 SF		Inspections Department	City Hall – Municipal Building – 220 Texas Boulevard	903-798-3912
115	Residential Building Permit (Base) - Attached Accessory Structure (decks, garage, open porch, and etc.) (Base + Variable)	$75.00	Each Trade		Inspections Department	City Hall – Municipal Building – 220 Texas Boulevard	903-798-3912
116	Residential Building Permit (Variable) - Attached Accessory Structure (decks, garage, open porch, and etc.) (Base + Variable)	$0.25	Per Square Foot per trade		Inspections Department	City Hall – Municipal Building – 220 Texas Boulevard	903-798-3912
117	Residential Building Permit (Base) - Detached Accessory Structure (shed, garage of 144 SF or more) (Base + Variable)	$75.00	Each Trade		Inspections Department	City Hall – Municipal Building – 220 Texas Boulevard	903-798-3912
118	Residential Building Permit (Variable) - Detached Accessory Structure (shed, garage of 144 SF or more) (Base + Variable)	$0.25	Per Square Foot per trade		Inspections Department	City Hall – Municipal Building – 220 Texas Boulevard	903-798-3912
119	Residential Building Permit - Alteration, Change Out or Individual Trade	$75.00	Each Trade		Inspections Department	City Hall – Municipal Building – 220 Texas Boulevard	903-798-3912
120	Residential Building Permit - Electrical or Gas Utility (optional)	$75.00	Each Trade	Temporary Power or Mechanical	Inspections Department	City Hall – Municipal Building – 220 Texas Boulevard	903-798-3912
121	Residential Building Permit (Base) - Modular Unit & Dwelling Moved On (Base + Variable)	$75.00	Each Trade		Inspections Department	City Hall – Municipal Building – 220 Texas Boulevard	903-798-3912

Item Number	SERVICE/PERMIT	FY15 RATE	PER UNIT	OTHER INFORMATION	OFFICE	LOCATION	TELEPHONE
122	Residential Building Permit (Variable) - Modular Unit & Dwelling Moved On (Base + Variable)	$0.25	Per Square Foot		Inspections Department	City Hall – Municipal Building – 220 Texas Boulevard	903-798-3912
123	Residential Building Permit - Multi-Family Dwelling (units available for individual ownerships)	$450.00	Per Living Unit		Inspections Department	City Hall – Municipal Building – 220 Texas Boulevard	903-798-3912
124	Residential Re-Inspection Fee	$25.00	All Trades		Inspections Department	City Hall – Municipal Building – 220 Texas Boulevard	903-798-3912
125	Non-Residential Building Permit: Cost of Construction up to $2,500	$150.00	Each		Inspections Department	City Hall – Municipal Building – 220 Texas Boulevard	903-798-3912
126	Non-Residential Building Permit: Cost of Construction $2,501 - $7,500	$200.00	Each		Inspections Department	City Hall – Municipal Building – 220 Texas Boulevard	903-798-3912
127	Non-Residential Building Permit: Cost of Construction $7,501 - $15,000	$300.00	Each		Inspections Department	City Hall – Municipal Building – 220 Texas Boulevard	903-798-3912
128	Non-Residential Building Permit: Cost of Construction $15,001 - $25,000	$400.00	Each		Inspections Department	City Hall – Municipal Building – 220 Texas Boulevard	903-798-3912
129	Non-Residential Building Permit: Cost of Construction $25,001 - $50,000	$650.00	Each		Inspections Department	City Hall – Municipal Building – 220 Texas Boulevard	903-798-3912
130	Non-Residential Building Permit: Cost of Construction $50,001 - $100,000	$1,300.00	Each		Inspections Department	City Hall – Municipal Building – 220 Texas Boulevard	903-798-3912
131	Non-Residential Building Permit: Cost of Construction $100,001 - $200,000	$2,600.00	Each		Inspections Department	City Hall – Municipal Building – 220 Texas Boulevard	903-798-3912
132	Non-Residential Building Permit: Cost of Construction $200,001 - $350,000	$4,000.00	Each		Inspections Department	City Hall – Municipal Building – 220 Texas Boulevard	903-798-3912
133	Non-Residential Building Permit: Cost of Construction $350,001 - $500,000	$5,500.00	Each		Inspections Department	City Hall – Municipal Building – 220 Texas Boulevard	903-798-3912
134	Non-Residential Building Permit: Cost of Construction $500,001 - $750,000	$7,500.00	Each		Inspections Department	City Hall – Municipal Building – 220 Texas Boulevard	903-798-3912
135	Non-Residential Building Permit (Base): Cost of Construction $750,001 - $1,000,000	$9,500.00	Each		Inspections Department	City Hall – Municipal Building – 220 Texas Boulevard	903-798-3912
136	Non-Residential Building Permit (Variable): Cost of Construction over $1,000,000 (Base + Variable)	0.18%	All Cost over $1,000,000	$9,500 + 0.18% (.0018)	Inspections Department	City Hall – Municipal Building – 220 Texas Boulevard	903-798-3912
137	Application Plan Review Fee: Residential	$75.00	Each		Inspections Department	City Hall – Municipal Building – 220 Texas Boulevard	903-798-3912
138	Application Plan Review Fee: Non-Residential	$300.00	Each		Inspections Department	City Hall – Municipal Building – 220 Texas Boulevard	903-798-3912
139	Residential: Re-Review Plan or Change	$50.00	Each		Inspections Department	City Hall – Municipal Building – 220 Texas Boulevard	903-798-3912
140	Non-Residential: Re-Review Plan or Change	$150.00	Each		Inspections Department	City Hall – Municipal Building – 220 Texas Boulevard	903-798-3912
141	Residential: Re-Inspection Fee	$50.00	Each Trade		Inspections Department	City Hall – Municipal Building – 220 Texas Boulevard	903-798-3912
142	Non-Residential: Re-Inspection Fee	$75.00	Each Trade		Inspections Department	City Hall – Municipal Building – 220 Texas Boulevard	903-798-3912
143	Inspections Outside City Limits - Inside ETJ	$150.00	Each	Per Request from owner/contractor	Inspections Department	City Hall – Municipal Building – 220 Texas Boulevard	903-798-3912
144	Residential Irrigation Fee (Permit Only)	$75.00	Each		Inspections Department	City Hall – Municipal Building – 220 Texas Boulevard	903-798-3912
145	Non-Residential: Irrigation Fee	$150.00	Each		Inspections Department	City Hall – Municipal Building – 220 Texas Boulevard	903-798-3912
146	Demolition Permit	$150.00	Each	Performance Bond/cashiers check Required	Inspections Department	City Hall – Municipal Building – 220 Texas Boulevard	903-798-3912
147	Non-Residential: Temporary Electrical Power	$75.00	Each		Inspections Department	City Hall – Municipal Building – 220 Texas Boulevard	903-798-3912
148	Work Performed without Permit		Each	Double Fee	Inspections Department	City Hall – Municipal Building – 220 Texas Boulevard	903-798-3912

Item Number	SERVICE/PERMIT	FY15 RATE	PER UNIT	OTHER INFORMATION	OFFICE	LOCATION	TELEPHONE
149	Record Retrieval	$60.00	Each Request	Pulling closed files, plans and etc…	Inspections Department	City Hall – Municipal Building – 220 Texas Boulevard	903-798-3912
150	Replacement of Certificate of Occupancy Card	$25.00	Each		Inspections Department	City Hall – Municipal Building – 220 Texas Boulevard	903-798-3912
151	Re-stamp Previously Approved Plans	$25.00	Each		Inspections Department	City Hall – Municipal Building – 220 Texas Boulevard	903-798-3912
152	Permit Renewal of Expired Plans	0.25%	Each	.25% of original permit fee	Inspections Department	City Hall – Municipal Building – 220 Texas Boulevard	903-798-3912
153	Failure to Pick-up Permit within 60 days of Approval			Forfeit Fees	Inspections Department	City Hall – Municipal Building – 220 Texas Boulevard	903-798-3912
154	Refund Fee for Non-expired Permits	$75.00	Each		Inspections Department	City Hall – Municipal Building – 220 Texas Boulevard	903-798-3912
155	Refund Fee for Expired Permits			Forfeit Fees	Inspections Department	City Hall – Municipal Building – 220 Texas Boulevard	903-798-3912
156	Weekend/After Office Hours Inspection Fee	$75.00	Per Hour	Minimum of 3 hours	Inspections Department	City Hall – Municipal Building – 220 Texas Boulevard	903-798-3912
157	Miscellaneous Inspection	$75.00	Each		Inspections Department	City Hall – Municipal Building – 220 Texas Boulevard	903-798-3912
158	Construction or Work Site Trailer	$250.00	Per Trailer	Includes piers, tie-downs, steps, decks, electrical, plumbing, and mechanical	Inspections Department	City Hall – Municipal Building – 220 Texas Boulevard	903-798-3912
159	Minimum Inspection Miscellaneous Permit Fee	$25.00	Each		Inspections Department	City Hall – Municipal Building – 220 Texas Boulevard	903-798-3912
160	Builders & Mechanical Contractors (Plumbing, Electric, HVAC) Registration Fee	$30.00	One time	Expiration or cancellation of license or insurance re-registration is $30	Inspections Department	City Hall – Municipal Building 220 Texas Boulevard	903-798-3912
161	Driveway Permit	$20.00	Each		Inspections Department	City Hall – Municipal Building – 220 Texas Boulevard	903-798-3912
162	Swimming Pool Permit	$125.00	Each		Inspections Department	City Hall – Municipal Building – 220 Texas Boulevard	903-798-3912
163	Tent Permit	$50.00	Each		Inspections Department	City Hall – Municipal Building – 220 Texas Boulevard	903-798-3912
164	Sign Permit (Base) up to 30 Square Feet	$120.00	Each		Inspections Department	City Hall – Municipal Building – 220 Texas Boulevard	903-798-3912
165	Sign Permit (Variable) over 30 Square Feet	$4.00	Per Square Foot	Base + Variable (for each SF over 30 SF)	Inspections Department	City Hall – Municipal Building – 220 Texas Boulevard	903-798-3912
166	Sign Permit-Banner	$10.00	Each	or $100 per year for one banner sign per month	Inspections Department	city Hall – Municipal Building – 220 Texas Boulevard	903-798-9312
167	Sign Permit Promotional/Grand Opening	$75.00	Each	Maximum Promotional 90 days; Grand Opening two weeks	Inspections Department	city Hall – Municipal Building – 220 Texas Boulevard	903-798-9313
168	Billboard/Off Premise advertising sign	$500.00	Per Year		Inspections Department	City Hall – Municipal Building – 220 Texas Boulevard	903-798-3912
169	Cell Tower Permit	$650.00	Each		Inspections Department	City Hall – Municipal Building – 220 Texas Boulevard	903-798-3912
170	Co-location Antenna on Cell Tower Permit	$100.00	Each		Inspections Department	City Hall – Municipal Building – 220 Texas Boulevard	903-798-3912
171	Basic Electrical Rough-In or General Repairs Permit (up to 4 circuits)	$20.00	Permit		Inspections Department	City Hall – Municipal Building – 220 Texas Boulevard	903-798-3912
172	Additional Electrical Rough-In or General Repairs Permit (5 – 16 circuits) (Basic + Additional)	$2.00	Each Additional Circuit		Inspections Department	City Hall – Municipal Building – 220 Texas Boulevard	903-798-3912
173	Additional Electrical Rough-In or General Repairs Permit (More than 16 circuits) (Basic + Additional 1 + Additional 2)	$1.50	Each Additional Circuit		Inspections Department	City Hall – Municipal Building – 220 Texas Boulevard	903-798-3912
174	Restore/Repair Electrical Service Permit (100 amp)	$17.00	Each		Inspections Department	City Hall – Municipal Building – 220 Texas Boulevard	903-798-3912
175	Restore/Repair Electrical Service Permit (200 amp)	$18.50	Each		Inspections Department	City Hall – Municipal Building – 220 Texas Boulevard	903-798-3912

Item Number	SERVICE/PERMIT	FY15 RATE	PER UNIT	OTHER INFORMATION	OFFICE	LOCATION	TELEPHONE
176	Restore/Repair Electrical Service Permit (400 amp)	$22.50	Each		Inspections Department	City Hall – Municipal Building – 220 Texas Boulevard	903-798-3912
177	Restore/Repair Electrical Service Permit (600 amp)	$25.00	Each		Inspections Department	City Hall – Municipal Building – 220 Texas Boulevard	903-798-3912
178	Restore/Repair Electrical Service Permit (Greater than 600 amp)	$35.00	Each		Inspections Department	City Hall – Municipal Building – 220 Texas Boulevard	903-798-3912
179	Other General Electrical Repair Permit	$25.00	Each		Inspections Department	City Hall – Municipal Building – 220 Texas Boulevard	903-798-3912
180	Electric Power Permit for Sign	$25.00	Each		Inspections Department	City Hall – Municipal Building – 220 Texas Boulevard	903-798-3912
181	Placement of Temporary Pole for Electrical Power Permit	$15.00	Each		Inspections Department	City Hall – Municipal Building – 220 Texas Boulevard	903-798-3912
182	Appeal Concerning Electrical Code Filing Fee	$50.00	Each		Inspections Department	City Hall – Municipal Building – 220 Texas Boulevard	903-798-3912
183	Plumbing Permit Water (Installation or Replacement of Fixtures, Water Heater, Foot Spa, and etc.... Including general repair of water system)	$20.00	Each		Inspections Department	City Hall – Municipal Building – 220 Texas Boulevard	903-798-3912
184	Plumbing Permit: Sewer Line or Tap	$20.00	Each		Inspections Department	City Hall – Municipal Building – 220 Texas Boulevard	903-798-3912
185	Plumbing Permit Gas (Basic) (up to 4 openings)	$20.00	Each		Inspections Department	City Hall – Municipal Building – 220 Texas Boulevard	903-798-3912
186	Plumbing Permit Gas (Additional) (Greater than 4 openings) (Basic + Additional)	$1.00	Each (over 4)		Inspections Department	City Hall – Municipal Building – 220 Texas Boulevard	903-798-3912
187	Plumbing Permit Irrigation: PRZ installation	$10.00	Each		Inspections Department	City Hall – Municipal Building – 220 Texas Boulevard	903-798-3912
188	Plumbing Permit Irrigation (Basic) (1-5 heads)	$8.00	Permit		Inspections Department	City Hall – Municipal Building – 220 Texas Boulevard	903-798-3912
189	Plumbing Permit Irrigation (Additional) (More than 5 heads) (Basic + Additional)	$0.60	Each Additional Head		Inspections Department	City Hall – Municipal Building – 220 Texas Boulevard	903-798-3912
190	Plumbing Permit Miscellaneous (Backflow, Grease Trap, Sand/Oil Separator and etc...)	$20.00	Each		Inspections Department	City Hall – Municipal Building – 220 Texas Boulevard	903-798-3912
191	HVAC Permit: Residential Air Installation/Replacement	$25.00	Each		Inspections Department	City Hall – Municipal Building – 220 Texas Boulevard	903-798-3912
192	HVAC Permit: Commercial Air Installation/Replacement (Basic) (100 Tons or less) (Minimum $25)	$1.20	Per Ton		Inspections Department	City Hall – Municipal Building – 220 Texas Boulevard	903-798-3912
193	HVAC Permit: Commercial Air Installation/Replacement (Additional) (over 100 Tons) (Basic + Additional)	$0.60	Per Ton over 100 Tons		Inspections Department	City Hall – Municipal Building – 220 Texas Boulevard	903-798-3912
194	HVAC Permit: Commercial Heat (33,000 - 165,000 BTU)	$12.00	Each		Inspections Department	City Hall – Municipal Building – 220 Texas Boulevard	903-798-3912
195	HVAC Permit: Commercial Heat (165,001 - 330,000 BTU)	$24.00	Each		Inspections Department	City Hall – Municipal Building – 220 Texas Boulevard	903-798-3912
196	HVAC Permit: Commercial Heat (330,001 - 1,165,000 BTU)	$36.00	Each		Inspections Department	City Hall – Municipal Building – 220 Texas Boulevard	903-798-3912
197	HVAC Permit: Commercial Heat (1,165,001 - 3,300,000 BTU)	$60.00	Each		Inspections Department	City Hall – Municipal Building – 220 Texas Boulevard	903-798-3912
198	HVAC Permit: Commercial Heat (over 33,300,000 BTU)	$84.00	Each		Inspections Department	City Hall – Municipal Building – 220 Texas Boulevard	903-798-3912
199	Library Membership Texarkana AR/TX Residents	$0.00	Each		Library	600 West 3rd Street	903-794-2149
200	Library Membership Non-Texarkana Resident	$20.00	Annual Fee		Library	600 West 3rd Street	903-794-2149
201	Library Overdue Fines (Books and Compact Discs)	$0.25	Per Calendar Day	Up to the cost of the book or compact discs. Return stops the fine accumulation.	Library	600 West 3rd Street	903-794-2149

Item Number	SERVICE/PERMIT	FY15 RATE	PER UNIT	OTHER INFORMATION	OFFICE	LOCATION	TELEPHONE
202	Library Overdue Fines (Videos, DVD or Playaway)	$2.00	Per Calendar Day	Until the return, up to the cost of the videos, DVD or Playaway	Library	600 West 3rd Street	903-794-2149
203	Library card replacement	$1.00	Per Replacement	Lost unexpired library card	Library	600 West 3rd Street	903-794-2149
204	Library: Ear buds	$1.00	Per Set		Library	600 West 3rd Street	903-794-2149
205	Library: Memory Sticks (flash drive)	$5.00	Per Drive		Library	600 West 3rd Street	903-794-2149
206	Library Bag (Plastic)	$0.50	Per Bag		Library	600 West 3rd Street	903-794-2149
207	Library Bag (Canvas)	$7.50	Per Bag		Library	600 West 3rd Street	903-794-2149
208	Library: Use of Typewriter	$0.50	Per 1/2 Hour		Library	600 West 3rd Street	903-794-2149
209	Library: Case Replacement	$1.00	Per Case		Library	600 West 3rd Street	903-794-2149
210	Library: Due Date Card Replacement	$1.00	Per Card		Library	600 West 3rd Street	903-794-2149
211	Library: Photo copies (B&W)	$0.15	Per Page		Library	600 West 3rd Street	903-794-2149
212	Library: Photo copies (Color)	$1.00	Per Page		Library	600 West 3rd Street	903-794-2149
213	Library: Texas Notary	$1.00	Per Service		Library	600 West 3rd Street	903-794-2149
214	Library: Fax Service Receiving	$0.25	Per Page		Library	600 West 3rd Street	903-794-2149
215	Library: Fax Service Sending (local)	$0.25	Per Page		Library	600 West 3rd Street	903-794-2149
216	Library: Fax Service Sending (long distance)	$1.00	Per Page		Library	600 West 3rd Street	903-794-2149
217	Library: Lamination			Inquire at Circulation Desk	Library	600 West 3rd Street	903-794-2149
218	Library: David Nelson Meeting Room Rental	$75.00	Per Rental	Non-Profit Organizations Exempt	Library	600 West 3rd Street	903-794-2149
219	Municipal Court Technology Fees	$4.00	Per Case		Municipal Court	Bi-State Justice Building 100 North State Line Avenue at Broad Street	903-798-3551
220	Municipal Court Building Security Fees	$3.00	Per Case		Municipal Court	Bi-State Justice Building 100 North State Line Avenue at Broad Street	903-798-3551
221	Municipal Court Warrant Fee	$50.00	Per Warrant		Municipal Court	Bi-State Justice Building 100 North State Line Avenue at Broad Street	903-798-3551
222	Park Pavilion Rental (Half Day)	$15.00	Per Rental	8:00 AM - 2:45 PM or 3:00 PM to 10:00 PM	Parks, Recreation and Community Health	3222 W. 7th Street	903-798-3978
223	Park Pavilion Rental (All Day)	$25.00	Per Rental		Parks, Recreation and Community Health	3222 W. 7th Street	903-798-3978
224	Ball Field Rental - Practice Game	$20.00	Per Game		Parks, Recreation and Community Health	3222 W. 7th Street	903-798-3978
225	Ball Field Rental - Tournaments 1 Field	$100.00	Per Tournament		Parks, Recreation and Community Health	3222 W. 7th Street	903-798-3978
226	Ball Field Rental - Tournaments 2 Fields	$175.00	Per Tournament		Parks, Recreation and Community Health	3222 W. 7th Street	903-798-3978
227	Ball Field Rental - Tournaments 3 Fields	$250.00	Per Tournament		Parks, Recreation and Community Health	3222 W. 7th Street	903-798-3978
228	Ball Field Rental - Tournaments 4-5 Fields	$300.00	Per Tournament		Parks, Recreation and Community Health	3222 W. 7th Street	903-798-3978
229	Collins Senior Center Activity Room	$75.00	Per Event		Parks, Recreation and Community Health	3222 W. 7th Street	903-798-3978
230	Collins Senior Center Meeting Room	$25.00	Each Rental		Parks, Recreation and Community Health	3222 W. 7th Street	903-798-3978
231	Southwest Center Multipurpose Room (GYM) Rental	$0.00	Each Rental	Group 1 Users	Southwest Center	3222 W. 7th Street	903-798-3978
232	Southwest Center Multipurpose Room (GYM) Rental	$150.00	Each Rental	Group 2 Users	Southwest Center	3222 W. 7th Street	903-798-3978
233	Southwest Center Multipurpose Room (GYM) Rental	$275.00	Each Rental	Group 3 Users	Southwest Center	3222 W. 7th Street	903-798-3978
234	Southwest Center ABC Room Rental	$0.00	Each Rental	Group 1 Users	Southwest Center	3222 W. 7th Street	903-798-3978
235	Southwest Center ABC Room Rental	$0.00	Each Rental	Group 2 Users	Southwest Center	3222 W. 7th Street	903-798-3978

Item Number	SERVICE/PERMIT	FY15 RATE	PER UNIT	OTHER INFORMATION	OFFICE	LOCATION	TELEPHONE
236	Southwest Center ABC Room Rental	$75.00	Each Rental	Group 3 Users	Southwest Center	3222 W. 7th Street	903-798-3978
237	Southwest Center Game/Activity Room Rental	$0.00	Each Rental	Group 1 Users	Southwest Center	3222 W. 7th Street	903-798-3978
238	Southwest Center Game/Activity Room Rental	$0.00	Each Rental	Group 2 Users	Southwest Center	3222 W. 7th Street	903-798-3978
239	Southwest Center Game/Activity Room Rental	$50.00	Each Rental	Group 3 Users	Southwest Center	3222 W. 7th Street	903-798-3978
240	Southwest Center Room A Rental	$150.00	Each Rental	Group 1 Users	Southwest Center	3222 W. 7th Street	903-798-3978
241	Southwest Center Room A Rental	$0.00	Each Rental	Group 2 Users	Southwest Center	3222 W. 7th Street	903-798-3978
242	Southwest Center Room A Rental	$25.00	Each Rental	Group 3 Users	Southwest Center	3222 W. 7th Street	903-798-3978
243	Southwest Center Room B Rental	$250.00	Each Rental	Group 1 Users	Southwest Center	3222 W. 7th Street	903-798-3978
244	Southwest Center Room B Rental	$0.00	Each Rental	Group 2 Users	Southwest Center	3222 W. 7th Street	903-798-3978
245	Southwest Center Room B Rental	$25.00	Each Rental	Group 3 Users	Southwest Center	3222 W. 7th Street	903-798-3978
246	Southwest Center Room C Rental	$0.00	Each Rental	Group 1 Users	Southwest Center	3222 W. 7th Street	903-798-3978
247	Southwest Center Room C Rental	$0.00	Each Rental	Group 2 Users	Southwest Center	3222 W. 7th Street	903-798-3978
248	Southwest Center Room C Rental	$25.00	Each Rental	Group 3 Users	Southwest Center	3222 W. 7th Street	903-798-3978
249	Southwest Center Room D Rental	$0.00	Each Rental	Group 1 Users	Southwest Center	3222 W. 7th Street	903-798-3978
250	Southwest Center Room D Rental	$0.00	Each Rental	Group 2 Users	Southwest Center	3222 W. 7th Street	903-798-3978
251	Southwest Center Room D Rental	$25.00	Each Rental	Group 3 Users	Southwest Center	3222 W. 7th Street	903-798-3978
252	Application for Zoning Change (Base Fee) (Base + Variable)	$250.00	Per Application		Planning and Community Development Department	City Hall – Municipal Building – 220 Texas Boulevard	903-798-3945
253	Application for Specific Use Permit (Base Fee) (Base + Variable)	$250.00	Per Application		Planning and Community Development Department	City Hall – Municipal Building – 220 Texas Boulevard	903-798-3945
254	Application for Site Plan approval (Base Fee) (Base + Variable)	$250.00	Per Application		Planning and Community Development Department	City Hall – Municipal Building – 220 Texas Boulevard	903-798-3945
255	Application for Site Plan Amendments (Base Fee) (Base + Variable)	$250.00	Per Application		Planning and Community Development Department	City Hall – Municipal Building – 220 Texas Boulevard	903-798-3945
256	Specific Use Permit Renewal (Base Fee) (Base + Variable)	$100.00	Per Permit		Planning and Community Development Department	City Hall – Municipal Building – 220 Texas Boulevard	903-798-3945
257	Application fee for Amendment to Zoning Ordinance	$250.00	Per Amendment		Planning and Community Development Department	City Hall – Municipal Building – 220 Texas Boulevard	903-798-3945
258	Variances Requests (ZBA)(Base Fee) (Base + Variable)	$150.00	Per Application		Planning and Community Development Department	City Hall – Municipal Building – 220 Texas Boulevard	903-798-3945
259	Historic District Certificate of Appropriateness	$75.00	Per Applicant		Planning and Community Development Department	City Hall – Municipal Building – 220 Texas Boulevard	903-798-3945
260	Subdivision Plats – preliminary (Base Fee) (Base + Variable Deposit)	$100.00	Per Plat		Planning and Community Development Department	City Hall – Municipal Building – 220 Texas Boulevard	903-798-3945
261	Subdivision Plats – final (Base Fee) (Base + Variable Deposit)	$200.00	Per Plat		Planning and Community Development Department	City Hall – Municipal Building – 220 Texas Boulevard	903-798-3945

Item Number	SERVICE/PERMIT	FY15 RATE	PER UNIT	OTHER INFORMATION	OFFICE	LOCATION	TELEPHONE
262	Subdivision Plats – re-approval (Base Fee) (Base + Variable Deposit)	$100.00	Per Re-approval		Planning and Community Development Department	City Hall – Municipal Building – 220 Texas Boulevard	903-798-3945
263	Subdivision Replats (Base Fee) (Base + Variable Deposit)	$100.00	Per Replat		Planning and Community Development Department	City Hall – Municipal Building – 220 Texas Boulevard	903-798-3945
264	Subdivision Plat – amendments (Base Fee) (Base + Variable Deposit)	$100.00	Per Amendment		Planning and Community Development Department	City Hall – Municipal Building – 220 Texas Boulevard	903-798-3945
265	Subdivision Minor Plats (Base Fee) (Base + Variable Deposit)	$50.00	Per Minor Plat		Planning and Community Development Department	City Hall – Municipal Building – 220 Texas Boulevard	903-798-3945
266	Deposit for Variable Fees	$200.00	Per Application	(Variable costs include the costs such as advertising, mailing notices, sign manufacturing and posting and etc...) Unused deposit will be returned to petitioner once the final decision is rendered. If variable costs exceed the deposit amount the difference is required to be paid in full prior to issuance of the permit or other required document	Planning and Community Development Department	City Hall – Municipal Building – 220 Texas Boulevard	903-798-3945
267	Zoning Verification Document	$25.00	Each		Planning and Community Development Department	City Hall – Municipal Building – 220 Texas Boulevard	903-798-3945
268	Voluntary Annexation Application Fee	$500.00	Each Application		Planning and Community Development Department	City Hall – Municipal Building – 220 Texas Boulevard	903-798-3945
269	Street Name Change Application Fee	$500.00	Per request	Additional cost for new signage	Public Works Department	City Hall – Municipal Building – 220 Texas Boulevard	903-798-3948
270	Street Closed ROW Abandoned Application Fee	$2,000.00	Per request	Quit claim deeds and any legal work will be applicant's responsibility	Public Works Department	City Hall – Municipal Building – 220 Texas Boulevard	903-798-3948
271	Utility Easement Abandonment Application Fee	$500.00	Per request	Quit claim deeds and any legal work will be applicant's responsibility	Planning and Community Development Department	City Hall – Municipal Building – 220 Texas Boulevard	903-798-3945
272	Central Records and Communications	$10.00	Per Copy or 911 Recording		Police Department	Bi-State Justice Building 100 North State Line Avenue at Broad Street	903-798-3181
273	Police: Accident Report	$5.00	Copy of Report	Front and back pages	Police Department	Bi-State Justice Building 100 North State Line Avenue at Broad Street	903-798-3181
274	Police: Offense Report	$5.00	Copy of Report	Front page only	Police Department	Bi-State Justice Building 100 North State Line Avenue at Broad Street	903-798-3181
275	Police: Criminal History	$10.00	Each	Must show two forms of ID	Police Department	Bi-State Justice Building 100 North State Line Avenue at Broad Street	903-798-3181
276	Police: Certification of any Report	$5.00	Each	Added to the cost of the report	Police Department	Bi-State Justice Building 100 North State Line Avenue at Broad Street	903-798-3181

Item Number	SERVICE/PERMIT	FY15 RATE	PER UNIT	OTHER INFORMATION	OFFICE	LOCATION	TELEPHONE
277	Burglar Alarm Permits – Residential	$35.00	Annual Permit		Police Department	Bi-State Justice Building 100 North State Line Avenue at Broad Street	903-798-3116
278	Burglar Alarm Permits – Commercial	$75.00	Annual Permit		Police Department	Bi-State Justice Building 100 North State Line Avenue at Broad Street	903-798-3116
279	Burglar Alarm Permits -- late renewal (30 days or less late)	$20.00	Each System		Police Department	Bi-State Justice Building 100 North State Line Avenue at Broad Street	903-798-3116
280	Burglar Alarm Permits -- late renewal (more than30 days late)	$40.00	Each System		Police Department	Bi-State Justice Building 100 North State Line Avenue at Broad Street	903-798-3116
281	False Alarm Fees	$50.00	Each alarm	Per alarm after 6 alarms in any 12 month period	Police Department	Bi-State Justice Building 100 North State Line Avenue at Broad Street	903-798-3116
282	Wrecker Permits	$20.00	Per wrecker	Annual fee	Police Department	Bi-State Justice Building 100 North State Line Avenue at Broad Street	903-798-3116
283	Vehicle Storage Facility	$50.00	Per facility	Annual fee	Police Department	Bi-State Justice Building 100 North State Line Avenue at Broad Street	903-798-3116
284	Taxi Permits	$40.00	Per taxicab	Annual fee	Police Department	Bi-State Justice Building 100 North State Line Avenue at Broad Street	903-798-3116
285	Sexually Oriented Business	$400.00	Per business	Annual fee	Police Department	Bi-State Justice Building 100 North State Line Avenue at Broad Street	903-798-3116
286	Youth Club/Dance Hall Permit	$100.00	Per business	Annual fee	Police Department	Bi-State Justice Building 100 North State Line Avenue at Broad Street	903-798-3116
287	Water Meter Connection	$10.00	Each	Initial service	TWU	801 Wood Street	903-798-3800
288	Water Meter Disconnect	$10.00	Each	Discontinue Service	TWU	801 Wood Street	903-798-3800
289	Late Service Charge – Non-Payment	10%	On billed amount	If not paid by Due Date	TWU	801 Wood Street	903-798-3800
290	Service Call to reinstate water	$25.00	Each	After Hours	TWU	801 Wood Street	903-798-3800
291	Water meter reread initiated by Customer	$10.00	Each		TWU	801 Wood Street	903-798-3800
292	Water meter testing initiated by Customer	$30.00	Each	Meters two inches & smaller	TWU	801 Wood Street	903-798-3800
293	Water meter testing initiated by Customer	$150.00	Each	Meters larger than two inches	TWU	801 Wood Street	903-798-3800
294	Water meter Tampering	$35.00	Each		TWU	801 Wood Street	903-798-3800
295	Unauthorized Water Connection Inserted	$35.00	Each		TWU	801 Wood Street	903-798-3800
296	Water meter Fees – 5/8" meter Sensus	$75.00	Each		TWU	801 Wood Street	903-798-3800
297	Water meter Fees – 1" meter Sensus	$135.00	Each		TWU	801 Wood Street	903-798-3800
298	Water: Single Register 2" (irrigation)	$266.00	Each		TWU	801 Wood Street	903-798-3800
299	Inspection/Tapping Fee for Water Main	$25.00	Each		TWU	801 Wood Street	903-798-3800
300	Bacteriological testing of water samples	$20.00	Each		TWU	801 Wood Street	903-798-3800
301	Sanitary Sewer Availability Fee	$25.00	Monthly	Non-Connection when Sewer Connection is available to the property	TWU	801 Wood Street	903-798-3800
302	Sewer Surcharge – Excessive Strength Wastes	$0.10	TSS per pound		TWU	801 Wood Street	903-798-3800
303	Sewer Surcharge – Excessive Strength Wastes	$0.25	BOD per pound		TWU	801 Wood Street	903-798-3800
304	Industrial Wastewater Discharge Permit	$300.00		Significant Discharger	TWU	801 Wood Street	903-798-3800
305	Industrial Wastewater Discharge Permit	$200.00		Minor Discharger	TWU	801 Wood Street	903-798-3800
306	Industrial Wastewater Discharge Permit	$50.00		Commercial Discharger	TWU	801 Wood Street	903-798-3800
307	Industrial Wastewater Discharge Permit	$50.00		Intermittent Discharger	TWU	801 Wood Street	903-798-3800
308	Industrial Wastewater Discharge Permit	$100.00		Transported Discharger	TWU	801 Wood Street	903-798-3800
309	Industrial Wastewater Discharge Permit	$50.00		Non-Discharge	TWU	801 Wood Street	903-798-3800

Item Number	SERVICE/PERMIT	FY15 RATE	PER UNIT	OTHER INFORMATION	OFFICE	LOCATION	TELEPHONE
310	Delivery of Non-Domestic Waste to POTW Treatment Plant	$0.10	Per Gallon		TWU	801 Wood Street	903-798-3800
311	Temporary Wastewater Discharge Permit	$50.00			TWU	801 Wood Street	903-798-3800
312	Metered Discharge Treatment	$0.05	Per Gallon		TWU	801 Wood Street	903-798-3800
313	Liquid Waste Transport Permit	$50.00			TWU	801 Wood Street	903-798-3800
314	Septic Waste Dumping	$35.00	Per 1,000 Gallons	Per Volume of Tank	TWU	801 Wood Street	903-798-3800
315	Delivery of Non-Domestic Waste to POTW Treatment Plant	$0.10	Per Gallon		TWU	801 Wood Street	903-798-3800
316	Septic Waste Manifest Books	$12.00	Each		TWU	801 Wood Street	903-798-3800
317	Non-Residential Backflow Prevention Assembly Device	$50.00	Per Year		TWU	801 Wood Street	903-798-3800
318	Backflow Assembly Text Booklet	$6.00	Each		TWU	801 Wood Street	903-798-3800
319	Sales: Screened Compost	$10.00	Per Cubic Yard		South Regional Wastewater Treatment Plant	4000 South State Line Ave	903-798-3860
320	Sales: Screened Compost	$2.00	Per bag (1-Cubic Foot)		South Regional Wastewater Treatment Plant	4000 South State Line Ave	903-798-3860
321	Sales: Unscreened Compost	$5.00	Per Cubic Yard		South Regional Wastewater Treatment Plant	4000 South State Line Ave	903-798-3860
322	Sales: Wood Chips	$8.00	Per Cubic Yard		South Regional Wastewater Treatment Plant	4000 South State Line Ave	903-798-3860
323	Sales: Wood Chips	$1.00	Per Bag (2-Cubic Foot)		South Regional Wastewater Treatment Plant	4000 South State Line Ave	903-798-3860
324	Sales: Leaf Mulch	$10.00	Per Cubic Yard		South Regional Wastewater Treatment Plant	4000 South State Line Ave	903-798-3860

City of Texarkana, Texas

Version: B

Briefing Sheet

Update Date: 7/9/2014 1:27 PM

Lead Department: Parks & Recreation **Action Officer:** Robby Robertson,

Subject: Resolution No. 2014-084 approving the renaming of the current Bringle Lake Park to Bringle Lake West and the new addition of Bringle Lake Park to Bringle Lake East.

Briefing: 7/14/2014	**Public Hearing:**	**Second Briefing:**	**Council Vote:** 7/28/2014

Item Schedule

Updates/History of Briefing:

Not Applicable

Executive Summary and Background Information:

The renovation and construction of the Bringle Lake Park, located off of the new University Road, is complete and the park(s) will consist of an elevated boardwalk, volleyball courts, pavilions, restroom facilities, fishing docks, playground equipment, and a new park road.

With the renovation and new park addition the staff is recommending the renaming of the Bringle Lake Park areas to “Bringle Lake East” and “Bringle Lake West.”

Potential Options:

Fiscal Implications:

None

Staff Recommendation:

Staff recommends this renaming.

Advisory Board/Committee Review:

None

Board/Committee Recommendation:

Not Applicable

Advisory Board/Committee Meeting Date and Minutes:

Not Applicable

Attachments

a. Goals and Perspectives (DOCX)
b. 2014-084 Bringle Lake East West (DOC)

City of Texarkana, Texas

Staff Coordination

Parks, Recreation & Health	Completed	Robby Robertson 06/26/2014 10:12 AM	Department Head Review	
Municipal Services and Public Works	Completed	Shirley Jaster 06/26/2014 10:48 AM	MS & PW Review	
Public Information Officer	06/26/2014 11:14 AM	Lisa Thompson	PIO Review	Completed
City Manager	John Whitson	City Manager Review	Completed	07/03/2014 10:08 AM
City Council	Jennifer Evans	Meeting	Completed	07/05/2014 2:15 PM

Meeting History

City of Texarkana, Texas

Developing Perspectives and Goals Pending Approval by the City Council:

Perspectives		Goals
Serve the Community	☐	Promote an Environmentally Sensitive & Livable Community
	☑	Provide a Safe Community
	☑	Deliver Quality Services
	☐	Foster a Healthy Community
Run the Operations	☐	Enhance Community Preparedness & Responsiveness
	☐	Maximize Partnership Opportunities
	☐	Provide Courteous & Responsive Customer Service
	☑	Model a Positive City Image
	☐	Deliver Efficient Services
	☐	Cultivate Community Involvement & Access
Manage the Resources	☐	Maintain Fiscal Strength
	☐	Maximize Utilization & Resources
	☑	Invest in Infrastructure & Transportation
Develop Personnel	☐	Develop a Skilled & Diverse Workforce
	☐	Create a Positive & Rewarding Work Culture

Perspectives and Goals Additional Comments:

None

Resource Impact:

Staff time required if item is approved:	No Additional

Other Potential Impacts:

NONE APPLICABLE

Public Information Plan:

☐	Newspaper Notice (Required by Statute)	☐	Public Hearing (Required by Statute)
☐	Public Forum/Input Session	☐	Press Release
☑	E-News Distribution	☑	Website Notice
☑	Social Media (Twitter, Facebook, etc.)	☐	Special Mailing
☐	Flyers Posted	☐	Banners Posted
☐	Survey	☐	Automated Phone Call
☐	None Required	☐	

Other:

Attachment: Goals and Perspectives [Revision 1] (1144 : Res No. 2014-084 Renaming Bringle Lake Park/East-West)

RESOLUTION NO. 2014-084

A RESOLUTION OF THE CITY COUNCIL OF THE CITY OF TEXARKANA, TEXAS, APPROVING THE RENAMING OF THE CURRENT BRINGLE LAKE PARK TO "BRINGLE LAKE WEST" AND THE NEW ADDITION OF BRINGLE LAKE PARK TO "BRINGLE LAKE EAST"; AUTHORIZING THE DIRECTOR OF PARKS AND RECREATION TO PREPARE AND POST THE APPROPRIATE SIGNS; AND ESTABLISHING AN EFFECTIVE DATE.

WHEREAS, the renovation and construction of the Bringle Lake Park, located off of the new University Road, is complete; and

WHEREAS, the park(s) will consist of an elevated boardwalk, volleyball courts, pavilions, restroom facilities, fishing docks, playground equipment, and a new park road; and

WHEREAS, with the renovation and new park addition, staff is recommending the renaming of the Bringle Lake Park areas to "Bringle Lake East" and "Bringle Lake West."

NOW, THEREFORE, BE IT RESOLVED BY THE CITY COUNCIL OF THE CITY OF TEXARKANA, TEXAS:

SECTION 1: That the City Council approves that the renovated and new park addition at Bringle Lake shall be named "Bringle Lake East" and "Bringle Lake West."

SECTION 2: That the Director of Parks and Recreation be and is hereby directed to prepare the appropriate signs and post them accordingly.

SECTION 3: That this Resolution shall be in full force and effect from and after its passage and approval.

PASSED AND APPROVED in Regular Council Session on this the 28th day of July, 2014.

ATTEST:

_____ _____

JENNIFER EVANS, CITY SECRETARY BOB BRUGGEMAN, MAYOR

Attachment: 2014-084 Bringle Lake East West [Revision 1] (1144 : Res No. 2014-084 Renaming Bringle Lake Park/East-West)

City of Texarkana, Texas

Version: C

Briefing Sheet

Update Date: 7/5/2014 1:20 PM

Lead Department: Public Works **Action Officer:** Debbie Burk,

Subject: Ordinance No. 2014-085 establishing a ninety (90) day Moratorium on the processing and approval of applications for the placement of "Off-Premise Signs" (Standard or CEVMS Billboards).

Briefing: 7/14/2014	**Public Hearing:** 7/28/2014	**Second Briefing:**	**Council Vote:** 8/11/2014

Item Schedule
Schedule 3: No briefing required (one week)

Updates/History of Briefing:

Not applicable.

Executive Summary and Background Information:

The City Council has directed the Planning Department to place a moratorium on any approval of permits for the placement of any off-premise signage (standard or CEVMS billboards) until an amendment for the sizing and location of these type signs throughout our city can be recommended by the Planning and Zoning Commission.

Potential Options:

- To approve the moratorium to give time for recommended amendment on this issue.
- To deny the moratorium and the current ordinance and permitting process will remain in place.

Fiscal Implications:

Not applicable.

Staff Recommendation:

Staff recommends for approval of the moratorium to allow time for the Planning and Zoning Commission to consider amending off-premise signage rules and regulations pertaining to the size and location for this type signage.

Advisory Board/Committee Review:

Planning and Zoning Commission.

Board/Committee Recommendation:

Not applicable at this time.

Advisory Board/Committee Meeting Date and Minutes:

Not applicable.

Attachments

a. Ordinance No. 2014-085 (DOCX)
b. Goals and Perspectives (DOCX)

Staff Coordination

Assistant City Manager	Shirley Jaster	Department Head Review	Completed	06/30/2014 2:12 PM
Municipal Prosecutor	Deborah Jones	Review	Completed	06/30/2014 6:01 PM
Public Information Officer	Lisa Thompson	PIO Review	Completed	06/30/2014 6:13 PM
City Manager	John Whitson	City Manager Review	Completed	07/03/2014 10:11 AM
City Council	Jennifer Evans	Meeting	Completed	07/05/2014 2:15 PM

Meeting History

Publish

ORDINANCE NO. 2014-085

AN ORDINANCE OF THE CITY COUNCIL OF THE CITY OF TEXARKANA, TEXAS, ESTABLISHING A NINETY (90) DAY MORATORIUM ON THE PROCESSING AND APPROVAL OF APPLICATIONS FOR THE PLACEMENT OF "OFF-PREMISE SIGNS (STANDARD OR CHANGEABLE VARIABLE ELECTRONIC MESSAGING SIGNS, CEVMS, BILLBOARDS)" IN THE CITY OF TEXARKANA, TEXAS; PROVIDING FOR PUBLICATION; AND ESTABLISHING AN EFFECTIVE DATE.

WHEREAS, the City's Zoning Ordinance with regard to Off-Premise Signage (Standard or CEVMS Billboards) does not adequately address the size and location of Off-Premise Signage (Standard or CVEMS Billboards) located within the City; and

WHEREAS, it is the desire of the City Council and the Department of Planning to amend the Zoning Ordinance with regard to Off-Premise Signage (Standard or CEVMS Billboards) in order to regulate the size and location located within the City; and

WHEREAS, the City Council finds that it is in the best interest of the City to establish a ninety (90) day moratorium on the placement of any Off-Premise (Standard or CEVMS Billboards) within the City, in order to allow for appropriate time to review and amend the Zoning Ordinance with regard to signage to ensure adequate regulation of Off-Premise (Standard or CEVMS Billboards) located within the City;

NOW, THEREFORE BE IT ORDAINED BY THE CITY COUNCIL OF THE CITY OF TEXARKANA, TEXAS:

SECTION 1: That the processing and approval of permits/applications for the placement of Off-Premise Signage (Standard or CEVMS Billboards) within the City be and is hereby suspended for a period of ninety (90) days from the effective date of this Ordinance.

SECTION 2: That the City Secretary be and is hereby directed to publish the caption of this Ordinance for three (3) successive days in the Texarkana Gazette within ten (10) days of the passage of this Ordinance, as provided in Article XI, Section 3 of the Charter of the City of Texarkana, Texas.

SECTION 3: That this Ordinance, upon publication as provided herein, shall be in full force and effect ten (10) days after its passage and approval.

PASSED AND APPROVED in Regular Council Session on this the 11th day of August, 2014.

ATTEST:

_____ _____

JENNIFER EVANS, CITY SECRETARY BOB BRUGGEMAN, MAYOR

Attachment: Ordinance No. 2014-085 [Revision 7] (1145 : Ordinance No. 2014-085 (90 day Moratorium for off-premise signs))

City of Texarkana, Texas

Developing Perspectives and Goals Pending Approval by the City Council:

Perspectives	Goals
Serve the Community	☑ Promote an Environmentally Sensitive & Livable Community ☐ Provide a Safe Community ☑ Deliver Quality Services ☐ Foster a Healthy Community
Run the Operations	☐ Enhance Community Preparedness & Responsiveness ☐ Maximize Partnership Opportunities ☐ Provide Courteous & Responsive Customer Service ☑ Model a Positive City Image ☐ Deliver Efficient Services ☐ Cultivate Community Involvement & Access
Manage the Resources	☐ Maintain Fiscal Strength ☐ Maximize Utilization & Resources ☐ Invest in Infrastructure & Transportation
Develop Personnel	☐ Develop a Skilled & Diverse Workforce ☐ Create a Positive & Rewarding Work Culture

Perspectives and Goals Additional Comments:

Resource Impact:

Staff time required if item is approved:	Select One By Clicking Here

Other Potential Impacts:

Public Information Plan:

☐	Newspaper Notice (Required by Statute)	☐	Public Hearing (Required by Statute)
☐	Public Forum/Input Session	☐	Press Release
☐	E-News Distribution	☐	Website Notice
☐	Social Media (Twitter, Facebook, etc.)	☐	Special Mailing
☐	Flyers Posted	☐	Banners Posted
☐	Survey	☐	Automated Phone Call
☐	None Required	☐	

Other:

Attachment: Goals and Perspectives (1145 : Ordinance No. 2014-085 (90 day Moratorium for off-premise signs))

City of Texarkana, Texas

Briefing Sheet

Version:
Update Date: 7/7/2014 5:51 PM

Lead Department: Public Works Department **Action Officer:** Jennifer Evans, City Secretary

Subject: Resolution No. 2014-086 naming the new street constructed for access to Bringle Lake East Park, as Bringle Park Road.

Briefing: 7/14/2014	**Public Hearing:**	**Second Briefing:**	**Council Vote:** 7/28/2014

Item Schedule

Schedule 2: Brief once - vote once (two weeks)

Updates/History of Briefing:

NOT APPLICABLE

Executive Summary and Background Information:

Construction is currently nearing completion on Bringle Park. As part of that construction project, a street has been constructed to provide access to Bringle Lake East Park. This street section has not yet been named. Staff is proposing to name this new street section "Bringle Park Road."

Potential Options:

- None
-

Fiscal Implications:

Minimal cost for street signage

Staff Recommendation:

Staff recommends approval.

Advisory Board/Committee Review:

NONE

Board/Committee Recommendation:

NOT APPLICABLE

Advisory Board/Committee Meeting Date and Minutes:

NOT APPLICABLE

Attachments

a. Goals and Perspectives (DOCX)
b. Res No 2014-086 Bringle Park Road Street Naming (DOC)

c. Proposed Bringle Park Road Map (PDF)

Staff Coordination

Public Works Department	Completed	Kyle Dooley 07/07/2014 5:51 PM	Department Head Review	
Parks, Recreation & Health	07/07/2014 7:01 PM	Robby Robertson	Review	Completed
Public Information Officer	07/07/2014 7:10 PM	Lisa Thompson	PIO Review	Completed
City Manager		City Manager Review	Pending	
City Council	Pam Burns	Meeting	Pending	

Meeting History

City of Texarkana, Texas

Developing Perspectives and Goals Pending Approval by the City Council:

Perspectives	Goals
Serve the Community	☐ Promote an Environmentally Sensitive & Livable Community ☐ Provide a Safe Community ☑ Deliver Quality Services ☐ Foster a Healthy Community
Run the Operations	☐ Enhance Community Preparedness & Responsiveness ☐ Maximize Partnership Opportunities ☐ Provide Courteous & Responsive Customer Service ☐ Model a Positive City Image ☑ Deliver Efficient Services ☐ Cultivate Community Involvement & Access
Manage the Resources	☐ Maintain Fiscal Strength ☐ Maximize Utilization & Resources ☑ Invest in Infrastructure & Transportation
Develop Personnel	☐ Develop a Skilled & Diverse Workforce ☐ Create a Positive & Rewarding Work Culture

Perspectives and Goals Additional Comments:

NONE

Resource Impact:

Staff time required if item is approved:	No Additional

Other Potential Impacts:

NONE APPLICABLE

Public Information Plan:

☐	Newspaper Notice (Required by Statute)	☐	Public Hearing (Required by Statute)
☐	Public Forum/Input Session	☐	Press Release
☐	E-News Distribution	☐	Website Notice
☐	Social Media (Twitter, Facebook, etc.)	☐	Special Mailing
☐	Flyers Posted	☐	Banners Posted
☐	Survey	☐	Automated Phone Call
☑	None Required	☐	

Other:

Attachment: Goals and Perspectives (1152 : Res. No. 2014-086 Naming Bringle Park Road)

RESOLUTION NO. 2014-086

A RESOLUTION OF THE CITY COUNCIL OF THE CITY OF TEXARKANA, TEXAS, NAMING THE NEW STREET, CONSTRUCTED FOR ACCESS TO BRINGLE LAKE EAST PARK, AS BRINGLE PARK ROAD; AND ESTABLISHING AN EFFECTIVE DATE.

WHEREAS, the renovation and construction of the Bringle Lake East Park, located off of the new University Road, is nearing completion; and

WHEREAS, it is necessary to name the new street that was constructed for access to the park;

NOW, THEREFORE BE IT RESOLVED BY THE CITY COUNCIL OF THE CITY OF TEXARKANA, TEXAS:

SECTION 1: That the City Council approves "Bringle Park Road" as the name of the new street that was constructed for access to Bringle Lake East Park.

SECTION 2: That this street naming shall not become effective until thirty (30) days after the date of passage of this Resolution, so as to provide sufficient time for street sign changes, postal service adjustments, and business and personal address changes to be implemented by those affected by the change.

SECTION 3: That this Resolution shall be in full force and effect from and after its passage and approval.

PASSED AND APPROVED in Regular Council Session on this the 28th day of July, 2014.

ATTEST:

_____ _____

JENNIFER EVANS, CITY SECRETARY BOB BRUGGEMAN, MAYOR

Attachment: Res No 2014-086 Bringle Park Road Street Naming [Revision 1] (1152 : Res. No. 2014-086 Naming Bringle Park Road)

Proposed Bringle Park Road

Attachment: Proposed Bringle Park Road Map (1152 : Res. No. 2014-086 Naming Bringle Park Road)

City of Texarkana, Texas

Briefing Sheet

Version:
Update Date: 7/10/2014 4:24 PM

Lead Department: Public Works Department **Action Officer:** Jennifer Evans, City Secretary

Subject: Resolution No. 2014-087 authorizing the City Manager to execute any necessary documents for Change Order #8 for the Morris Lane Phase II Construction Project, in an amount not to exceed Six Hundred Eighteen Thousand One Hundred Sixty-Four and 91/100 Dollars ($618,164.91).

Briefing: 7/14/2014	**Public Hearing:**	**Second Briefing:**	**Council Vote:** 7/28/2014

Item Schedule
Schedule 2: Brief once - vote once (two weeks)

Updates/History of Briefing:

Executive Summary and Background Information:

Please note there is a video link on our city website that shows the subgrade issues:
See: http://www.ci.texarkana.tx.us/326/Engineering then select 'Morris Lane Subgrade Issue' just above Future Construction Projects.

Morris Lane Phase II Construction Project is an Economic Development Administration (EDA) grant funded project, with local funding coming through the 2009 Bond Fund. The grant funding available was $1.2 million and the overall project was to build a street from Summerhill Road to Richmond Road. The first phase of construction included the section from Summerhill Road to Cowhorn Creek Road. The second, and current, phase of construction includes the section from Cowhorn Creek Road to Richmond Road. The allowed time to draw down grant funds is coming to an end in September and currently there is $269,742.72 left to be drawn down as the project nears completion. This draw down is based on a prorated portion of the contract amount that has been finished to date. If the project is completed on time, all of the funding will be able to be drawn down.
Currently, it is staff's feeling that this can be accomplished if we are able to move forward in dealing with two large issues. Staff is requesting authorization for the City Manager to execute a change order for $618,164.91 to address these issues. Funding to cover this expenditure is available in the 2009 Bond Fund. This is a very large change order compared to ones typically seen on City construction projects. With that said, historically on projects of this size we see a 10% to 15% increase to the original contract price through several smaller change orders. This change order would greatly increase the overall contract amount all at once, but it would put the percentage increase at approximately 15%.
The first issue is unstable subgrade on the entire project, but especially severe and unforeseen soil conditions between Richmond Road to Robin Lane. Staff has been dealing with subgrade issues for the entire project. Numerous areas of unstable soil were found in the road section between Cowhorn Creek Road and Robin Lane. There were line item quantities in the bid proposal to cover some of these areas. These areas utilized undercutting and removing the

unstable material, adding geogrid, and adding a select fill material to stabilize the subgrade. This process proved effective but these line item quantities in the bid proposal have been exceeded.

When the pavement was removed from the section between Richmond Road and Robin, it revealed a fat clay material that was at least 6 feet to 8 feet thick and was totally saturated. It is very unstable, to the point of moving under your feet as you walk across it. This subgrade will not allow us to install the pavement structure as per the construction plans. It is staff's recommendation that this entire area will have to have three feet of material removed and hauled off, install a geogrid material three feet below grade, install a high PI material 18 inches thick to keep the water below from pushing up through the fill, and install 18 inches of select fill. Once back to grade, cement will be mixed in to the top lift of select material for added stability. We then will be able to construct the pavement as called for in the plans. This area is roughly 1700 feet long and 39 feet wide. Again, all of these line items are in the bid proposal but the quantities have already been exceeded due to the previous subgrade issues. This repair will push those quantities greatly over their current totals, which already exceed the original line item quantities listed in the bid proposal, resulting in an increase of approximately $361,000 to the overall contract price.

The second issue is the "in-place" measured quantities for several line items are exceeding the original bid proposal totals. These discrepancies result in an increase of approximately $231,000 to the overall contract price. The largest difference is in the common roadway excavation quantity. The original quantity shows to excavate 18,000 cubic yards from the project. Staff is projecting that the actual excavation on the project will be 28,683 cubic yards. This difference results in over an $110,000 increase to the overall contract price. This difference is also not connected to any unstable subgrade excavation done on this project to date, as there is a separate line item to pay for that. The large majority of the remainder of the discrepancies center on the side streets that tie into Morris Lane. Due to the side street layouts, the surrounding yards have not been able to be tied back in to existing grade inside the right of way. This has led to a number of line items exceeding what was listed in the original bid proposal. Extra excavation, extra sod, removal of trees, removal of driveways, concrete driveways, etc. have all been increased because of this issue.

Finally, there is approximately $26,000 included in this change order to pay various line items that have had either overruns or underruns. Typically, staff prepares a final "cleanup" change order after construction is complete to balance the contract amount with the actual work performed. Since this change order is so large, staff felt it would be appropriate to take care of any outstanding items now rather than wait until the end of the project.

Potential Options:

- None
-

Fiscal Implications:

Bond Funds are available to cover this change order.

Staff Recommendation:

Staff recommends approval.

Advisory Board/Committee Review:

City of Texarkana, Texas

NONE

Board/Committee Recommendation:

NOT APPLICABLE

Advisory Board/Committee Meeting Date and Minutes:

NOT APPLICABLE

Attachments

a. Goals and Perspectives (DOCX)
b. Res No 2014-087 Morris Lane Phase II Change Order (DOCX)
c. Exhibit "A" - Proposed Morris Lane Change Order #8 (PDF)

Staff Coordination

Public Works Department	Kyle Dooley	Department Head Review	Completed	07/07/2014 5:38 PM
Public Information Officer	Lisa Thompson	PIO Review	Completed	07/07/2014 6:16 PM
Finance Department	Charlie Bassett	Review	Completed	07/11/2014 10:27 AM
City Manager	John Whitson	City Manager Review	Completed	07/11/2014 10:38 AM
City Council	Pam Burns	Meeting	Pending	

Meeting History

City of Texarkana, Texas

Developing Perspectives and Goals Pending Approval by the City Council:

Perspectives	Goals
Serve the Community	☐ Promote an Environmentally Sensitive & Livable Community ☐ Provide a Safe Community ☑ Deliver Quality Services ☐ Foster a Healthy Community
Run the Operations	☐ Enhance Community Preparedness & Responsiveness ☐ Maximize Partnership Opportunities ☐ Provide Courteous & Responsive Customer Service ☐ Model a Positive City Image ☑ Deliver Efficient Services ☐ Cultivate Community Involvement & Access
Manage the Resources	☐ Maintain Fiscal Strength ☐ Maximize Utilization & Resources ☑ Invest in Infrastructure & Transportation
Develop Personnel	☐ Develop a Skilled & Diverse Workforce ☐ Create a Positive & Rewarding Work Culture

Perspectives and Goals Additional Comments:

NONE

Resource Impact:

Staff time required if item is approved:	No Additional

Other Potential Impacts:

NONE APPLICABLE

Public Information Plan:

☐	Newspaper Notice (Required by Statute)	☐	Public Hearing (Required by Statute)
☐	Public Forum/Input Session	☐	Press Release
☐	E-News Distribution	☐	Website Notice
☐	Social Media (Twitter, Facebook, etc.)	☐	Special Mailing
☐	Flyers Posted	☐	Banners Posted
☐	Survey	☐	Automated Phone Call
☑	None Required	☐	

Other:

Attachment: Goals and Perspectives (1150 : Res. No. 2014-087 Morris Lane Phase II Change Order #8)

RESOLUTION NO. 2014-087

A RESOLUTION OF THE CITY COUNCIL OF THE CITY OF TEXARKANA, TEXAS, AUTHORIZING THE CITY MANAGER TO EXECUTE ANY NECESSARY DOCUMENTS FOR CHANGE ORDER NO. EIGHT (8) FOR THE MORRIS LANE PHASE II CONSTRUCTION PROJECT, IN AN AMOUNT NOT TO EXCEED SIX HUNDRED EIGHTEEN THOUSAND ONE HUNDRED SIXTY-FOUR AND 91/100 DOLLARS ($618,164.91) AND ESTABLISHING AN EFFECTIVE DATE.

WHEREAS, the proposed subgrade treatment method called for in this project will not be sufficient to support the pavement structure due to very severe and unforeseen soil conditions; and

WHEREAS, these severe conditions will make it necessary to remove and replace several thousand cubic yards of material, thus resulting in a sizeable increase in the contract price; and

WHEREAS, there are several line item quantities in the original bid proposal that either have or are projected to overrun based on the "in-place" measured quantities: and

WHEREAS, this Change Order rectifies the differences staff is experiencing between the line item quantities listed in the bid proposal versus the actual "in-place" measured quantities; and

WHEREAS, this proposed change will require a Change Order (Exhibit "A") in an amount not to exceed SIX HUNDRED EIGHTEEN THOUSAND ONE HUNDRED SIXTY-FOUR AND 91/100 DOLLARS ($618,164.91).

NOW, THEREFORE, BE IT RESOLVED BY THE CITY COUNCIL OF THE CITY OF TEXARKANA, TEXAS:

SECTION 1: That Change Order No. 8 for the Morris Lane Phase II Construction (Exhibit "A") in an amount not to exceed SIX HUNDRED EIGHTEEN THOUSAND ONE HUNDRED SIXTY-FOUR AND 91/100 DOLLARS ($618,164.91**)** be and is hereby approved.

SECTION 2: That the City Manager be and is hereby authorized to execute any necessary documents for said Change Order.

SECTION 3: That this Resolution shall be in full force and effect from and after is passage and approval.

PASSED AND APPROVED at a Regular Council Session on this the 28th day of July, 2014.

ATTEST:

_____ _____

JENNIFER EVANS, CITY SECRETARY BOB BRUGGEMAN, MAYOR

Attachment: Res No 2014-087 Morris Lane Phase II Change Order (1150 : Res. No. 2014-087 Morris Lane Phase II Change Order #8)

CONTRACTOR
FIELD ENGINEER OR INSPECTOR
Owner
(Circle One)

CHANGE ORDER NO.: EIGHT (8)

LOCATION:	Morris Lane	DATE:	July 2, 2014
OWNER:	City of Texarkana, Texas	ADDRESS:	P.O. Box 1967, Texarkana, Tx 75501
CONTRACTOR:	Tatum Excavating Company, Inc.	ADDRESS:	2416 South Lake Drive, Texarkana, Tx 7550
NAME OF PROJECT:	Morris Lane Phase II Construction Project	PROJECT NUMBER:	DPW 13-1902-01

ORIGINAL CONTRACT AMOUNT: $4,270,536.20

ADJUSTED CONTRACT AMOUNT TO DATE: $4,299,693.60

CHANGE ORDER AMOUNT: $618,164.91

TO: Tatum Excavating Company, Inc.

The owner is considering extra work under the above referenced contract and the contractor is hereby requested to prepare cost estimates on the items as follows:

Add: Common Roadway Excavation
Add: Geogrid
Add: Undercut
Add: Select Fill
Add: Fat Clay (18" Thick)
Add: Cement (40 lb/sy)
Add: Cement Stabilization (6" Deep)
Add: Class III RC Pipe - 18"
Add: Install Chain Link Fence & Gate
Add: Remove & Replace Trees
Add: Abatement Pipe
Add: Excavation (yards on side streets)
Add: Sod (yards on side streets)
Add: Remove Concrete Driveways
Add: Concrete Driveways
Add: Remove & Replace Crepe Myrtle Trees
Add: Asphalt Prime MC-30
Add: Landscaping at Guaranty Bond Bank

PLEASE SEE COMPELTE LIST ON FOLLOWING PAGE

Subject to conditions as follows:

A. The aforementioned change, and work affected thereby, are subject to all

Attachment: Exhibit "A" - Proposed Morris Lane Change Order #8 (1150 : Res. No. 2014-087 Morris Lane Phase II Change Order #8)

contract stipulations and covenants;

B. The rights of the owner are not prejudiced, and;

C. All claims against the owner which are incidental to, or as a consequence of the aforementioned change are satisfied.

BY: City of Texarkana, Texas
(Owner)

PAGE 1 OF 2

TO: City of Texarkana, Texas
(Owner)
FROM: Tatum Excavating Company, Inc.
(Contractor)

We have estimated the cost of the proposed work and find it to be approximately as follows:

ITEM	UNIT	QUANTITY	UNIT PRICE	TOTAL
Add: Common Roadway Excavation	CY	10,683.0	$10.65	$113,773.95
Add: Geogrid	SY	9,274.6	$3.00	$27,823.68
Add: Undercut	CY	13,279.0	$10.00	$132,790.00
Add: Select Fill	CY	8,535.0	$11.35	$96,871.68
Add: Fat Clay (18" Thick)	CY	3,684.0	$13.50	$49,734.00
Add: Cement (40 lb/sy)	TON	148.0	$141.00	$20,868.00
Add: Cement Stabilization (6" Deep)	SY	7,367.0	$4.50	$33,151.50
Add: Class III RC Pipe - 18"	LF	140.0	$35.25	$4,935.00
Add: Install Chain Link Fence & Gate	LS	1.0	$920.00	$920.00
Add: Remove & Replace Trees	EA	6.0	$2,450.00	$14,700.00
Add: Abatement Pipe	LF	267.0	$17.60	$4,699.20
Add: Excavation (yards on side streets)	SY	3,726.0	$10.65	$39,681.90
Add: Sod (yards on side streets)	SY	4,986.0	$5.80	$28,918.80
Add: Remove Concrete Driveways	SY	327.0	$11.05	$3,613.35
Add: Concrete Driveways	SY	291.0	$42.60	$12,396.60
Add: Remove & Replace Crepe Myrtle Trees	EA	3.0	$245.00	$735.00
Add: Asphalt Prime MC-30	GAL	256.0	$6.50	$1,664.00
Add: Landscaping at Guaranty Bond Bank	LS	1.0	$5,415.00	$5,415.00
Add: Abandon Utility Lines	LF	24.0	$3.30	$79.20
Add: Provide & Install 8" Diameter Sewer Main	LF	225.0	$58.80	$13,230.00
Add: 8" DIP Sewer Main	LF	48.0	$78.40	$3,763.20
Add: 48" Sanitary Sewer Manhole	EA	2.0	$2,515.00	$5,030.00
Add: 48" Sanitary Sewer Drop Manhole	EA	1.0	$3,275.00	$3,275.00
Add: 48" Sanitary Sewer Manhole Extra Vertical Feet	LF	3.9	$190.00	$731.50
Add: Trench Excavation Protection	LF	245.0	$0.75	$183.75
Add: 8" DIP Water Main	LF	81.0	$24.20	$1,960.20
Add: 8" Gate Valve	EA	1.0	$1,056.00	$1,056.00
Add: Ductile Iron Fittings & Accessories	EA	470.0	$3.00	$1,410.00
Add: Cut & Plug Existing 6" Water Main	LS	6.0	$550.00	$3,300.00
Delete: Provide & Install Box Culvert (4x2)	LF	-4.0	$168.00	-$672.00
Delete: Provide & Install 8" Diameter Sewer Main (1	LF	-28.0	$71.70	-$2,007.60
Delete: Provide 4" Sewer Service (Short)	LF	-3.0	$635.00	-$1,905.00
Delete: Provide 4" Sewer Service (Long)	LF	-1.0	$1,090.00	-$1,090.00
Delete: Provide & Install 6" Water Main (PVC)	LF	-17.0	$13.20	-$224.40
Delete: Provide & Install 8" Water Main (PVC)	LF	-9.0	$15.40	-$138.60
Delete: Provide & Install 6" Water Main (DIP)	LF	-10.0	$19.80	-$198.00
Valve	EA	-1.0	$1,485.00	-$1,485.00
Delete: Provide Water Service (Short)	LF	-1.0	$825.00	-$825.00

Estimated Cost of Materials: _____ Estimated Cost of Services: _____ Total Estimated Cost of This Change Order: $618,164.91

CONTRACTOR _____ DATE _____

In connection with your contract with the City of Texarkana, Texas, dated: September 9, 2013 for the Morris Lane Phase II Construction Project project, the above described work is ordered in accordance with Section 6 of the "Standard Form of Agreement".

Amount of contract to date, plus total estimated cost of Change Order, gives an adjusted Contract cost of $4,917,858.51 . Adjusted Contract time: _____ a total of: N/A DAYS.

RECOMMENDED BY DPW: _____ DATE _____

APPROVED BY: _____ DATE _____

NOTE:
Change Order signed by both parties, owner and contractor, shall constitute Notice to Proceed.

Fill out in triplicate: One for Contractor, One for Field Engineer or Inspector, One for Owner.

If additional space is needed, please use the back of original sheets.

Attachment: Exhibit "A" - Proposed Morris Lane Change Order #8 (1150 : Res. No. 2014-087 Morris Lane Phase II Change Order #8)

City of Texarkana, Texas

Version: G

Briefing Sheet

Update Date: 7/7/2014 11:29 AM

Lead Department: Purchasing and Contracting **Action Officer:** Sharon Moore, Purchasing Manager

Subject: Resolution No. 2014-056 approving and adopting the Property Policy Manual.

Briefing:	7/14/2014	**Public Hearing:**	7/14/2014	**Second Briefing:**	July 28, 2014	**Council Vote:**	8/11/2014

Item Schedule

Schedule 2: Brief once - vote once (two weeks)

Updates/History of Briefing:

Executive Summary and Background Information:

The City needs to establish a property policy and procedure bringing all property negotiations under the responsibility of one manager and department as determined by the City Manager.

Potential Options:

- Approval to adopt policies and procedures for property sales.
- Denial.

Fiscal Implications:

Additional revenue from property sales and restoration of unproductive properties to the tax roll.

Staff Recommendation:

Council Approval

Advisory Board/Committee Review:

None

Board/Committee Recommendation:

Not Applicable

Advisory Board/Committee Meeting Date and Minutes:

Not Applicable

Attachments

a. 056 Resolution Property Policy Manual (DOC)
b. 2014-056 Goals & Perspectives (DOCX)
c. Property Policy Manual - 07022014 (DOC)

City of Texarkana, Texas

Staff Coordination

Finance Department	Charlie Bassett	Department Head Review	Completed	05/15/2014 11:25 AM
Public Information Officer	Lisa Thompson	PIO Review	Completed	05/15/2014 11:25 AM
City Manager	John Whitson	City Manager Review	Completed	05/16/2014 11:03 AM
City Council	Pam Burns	Meeting	Completed	06/18/2014 8:58 AM
Public Information Officer	Lisa Thompson	Review	Completed	07/07/2014 8:29 AM
Purchasing and Contracting	Sharon Moore	Action Completed		07/07/2014 1:11 PM
Purchasing and Contracting	Sharon Moore	Review	Completed	07/07/2014 1:20 PM
City Manager	John Whitson	Review	Completed	07/07/2014 1:47 PM

Meeting History

05/27/14	City Council	MOVED FORWARD	Next: 06/09/14
06/09/14	City Council	MOVED FORWARD	Next: 07/14/14

RESOLUTION NO. 2014 - 056

A RESOLUTION OF THE CITY COUNCIL OF THE CITY OF TEXARKANA, TEXAS, APPROVING AND ADOPTING THE PROPERTY POLICY MANUAL; AND ESTABLISHING AN EFFECTIVE DATE.

WHEREAS, the Property Policy Manual has been formulated by staff to be used by the Property Manager appointed by the City Manager when buying and selling City property; and

WHEREAS, Finance, Purchasing, and Community Redevelopment and Grants staff participated in the establishment of policies and procedures set forth in the Property Policy Manual; and

WHEREAS, the City Council of the City of Texarkana, Texas, finds it to be in the best interest of the City to approve and adopt the proposed Property Policy Manual;

NOW, THEREFORE, BE IT RESOLVED BY THE CITY COUNCIL OF THE CITY OF TEXARKANA, TEXAS:

SECTION 1: The staff-recommended proposed Property Policy Manual is hereby approved and adopted in its entirety to read as set forth in the attached document.

SECTION 2: That this Resolution shall be in full force and effect from and after its passage and approval.

PASSED AND APPROVED in Regular Council Session on this the 11th day of August, 2014.

ATTEST:

_____ _____

JENNIFER EVANS, CITY SECRETARY BOB BRUGGEMAN, MAYOR

Attachment: 056 Resolution Property Policy Manual [Revision 3] (1098 : Res. No. 2014-056 Adopt Property Policy Manual)

City of Texarkana, Texas

Developing Perspectives and Goals Pending Approval by the City Council:

Perspectives	Goals
Serve the Community	☐ Promote an Environmentally Sensitive & Livable Community ☐ Provide a Safe Community ☑ Deliver Quality Services ☐ Foster a Healthy Community
Run the Operations	☐ Enhance Community Preparedness & Responsiveness ☐ Maximize Partnership Opportunities ☑ Provide Courteous & Responsive Customer Service ☐ Model a Positive City Image ☑ Deliver Efficient Services ☐ Cultivate Community Involvement & Access
Manage the Resources	☐ Maintain Fiscal Strength ☑ Maximize Utilization & Resources ☐ Invest in Infrastructure & Transportation
Develop Personnel	☐ Develop a Skilled & Diverse Workforce ☐ Create a Positive & Rewarding Work Culture

Perspectives and Goals Additional Comments:

None

Resource Impact:

Staff time required if item is approved:	Medium

Other Potential Impacts:

Additional revenue from property sales and restoration of properties to tax roll.

Public Information Plan:

☑	Newspaper Notice (Required by Statute)	☑	Public Hearing (Required by Statute)
☐	Public Forum/Input Session	☐	Press Release
☐	E-News Distribution	☐	Website Notice
☐	Social Media (Twitter, Facebook, etc.)	☐	Special Mailing
☐	Flyers Posted	☐	Banners Posted
☐	Survey	☐	Automated Phone Call
☐	None Required	☐	

Other:

Attachment: 2014-056 Goals & Perspectives (1098 : Res. No. 2014-056 Adopt Property Policy Manual)

Dated: July 02, 2014

PROPERTY POLICY MANUAL

The City's goals include reducing the number of idle properties held and maintained by the City and encouraging the development of an increased supply of single-family homes occupied by owners. The City strives to accomplish these goals by protecting and encouraging neighborhoods, by creating desirable parts of the City for economic development, while maximizing financial return and public good will and minimizing risks and liabilities for the City.

This policy is intended to address the following objectives:

1. Effectively and efficiently set out the guidelines for the sale of City-owned property;
2. Recognize and provide for the different categories of property held by the City;
3. Coordinate the sale of properties
4. Insure that the decisions to sell, hold or dispose of property reflect considered judgment with regard to both the short-term and long-term goals of the City.

II. GENERAL PROVISIONS

A. City-owned properties are administered by the Property Manager and are separated into four categories:

   1. Property For Sale
   2. Housing Program Properties
   3. City Facility Properties
   4. Land Bank Properties

B. A list of properties available for sale shall be created and maintained by the department as determined by the City Manager. Listed properties will fall into either the Properties for Sale (PFS) Program or Housing Program Properties.

Attachment: Property Policy Manual - 07022014 (1098 : Res. No. 2014-056 Adopt Property Policy Manual)

C. All City-owned real property will be sold in accordance with local policy and with any applicable State law including provisions of the Texas Local Government Code, Property Code and Tax Code.

D. The list of available properties is determined by the City's Property Manager. No properties shall be added or removed from the City's overall inventory without prior approval of the Property Manager in consultation with the City Manager and in accordance with this policy.

E. All sales are completed with the execution of a deed stating that the property is sold "AS IS", and sold subject to the prior owner's right of redemption, if any. The City makes no warranty concerning zoning or suitability for any specific purpose or use; and it is the buyer's responsibility to examine all applicable building codes and ordinances to determine if the property in question can be used for the buyer's intended purpose

F. Offers to Purchase property will not be accepted from any Disqualified Buyer. A Disqualified Buyer is anyone with:

1. A delinquent tax account for City, School, College or County Taxing Entities;
2. Past due amounts owed to the City for mowing, water bills, library fines, hotel, sales tax, abatement of other nuisances by the City or demolition of substandard structures; or
3. In current violation of any City code and/or ordinance related to real estate.

G. The proposed purchase of property by a City employee will be disclosed to the City Council and notice will be provided to the public on the agenda published for the City Council meeting at which approval of the sale is sought.

H. This policy grants the City Manager, or his/her designee, authority to surplus and sell real property with a selling price up to $5,000.00. Any single transaction exceeding this amount shall be approved by City Council.

I. The policy grants the City Manager, or his/her designee, authority to release liens on City owned property that would otherwise be unsellable.

J. The City shall not accept any donation, gift, trade or purchase of a property which includes an existing structure without obtaining an environmental assessment, including asbestos sampling and obtaining City Council approval prior to acceptance.

Attachment: Property Policy Manual - 07022014 (1098 : Res. No. 2014-056 Adopt Property Policy Manual)

III. DEFINITIONS

A. Adjoining Landowners: Landowners whose property borders the property in question.

B. City-Owned Facility Property: Property that is the site of a City facility or is planned for development as a City facility. This property is not for sale.

C. Exempt Property that cannot be developed independently: Property that is characterized as a narrow strip of land, or land that because of its shape, lack of access to public roads or utilities, or small area, cannot be developed independently under its current zoning or under applicable subdivision or other development control ordinances.

D. Housing Program Property: Property that has been transferred to the Planning and Community Development Department to be sold using one or more of the Housing Programs.

E. PFS Program Properties: Include all sellable properties, which have not been transferred to Planning and Community Development or have been returned to Property Management to be sold.

F. Land Bank Property: Properties that because of their physical characteristics and/or location have the potential to serve as a catalyst for economic development, protect an important resource, or contribute to the stabilization or revitalization of an area.

G. Minimum Bid: It is the lowest acceptable price set for a specific property.

H. Non-Tax Foreclosed Property: property acquired by the City through a method other than tax foreclosure (i.e. gift, bequest, purchase).

IV. RESPONSIBILITIES OF THE PROPERTY MANAGER

A. The Property Manager shall perform or direct the performance of a variety of tasks associated with the sale, management and oversight of City-owned properties in order to further the City's goals of housing, economic and community development.

B. The responsibilities of the Property Manager shall include the following:

1. Manage and maintain the entire City-owned real property inventory;

2. Determine the appropriate property category for each property;

Attachment: Property Policy Manual - 07022014 (1098 : Res. No. 2014-056 Adopt Property Policy Manual)

3. Serve as the City representative by responding to any public inquiries concerning the available property list;

4. Monitor all public sale processes to ensure that City policies remain consistent;

5. Prepare proposed sale packets for City Council review after an offer of purchase or high bid has been received.

V. PROCEDURES FOR THE SALE OF CITY OWNED PROPERTY

1. The Property Manager will prepare an "Invitation to Bid" document that will specify the following:
   -the address of the property
   -a minimum bid price for the property
   -the date bids will be opened
   -deposit requirements and rules
   -any restrictions on the property

   - The Property Manager may establish a minimum bid amount at his/her discretion and may increase the minimum bid amount to allow for full or partial recovery of expenses incurred by the City, depending on the marketability of the property.

   - Any costs subject to being included in the minimum bid must be documented in the subject property file as a means of validating the actual expense incurred.

   - Notice of the opportunity to bid will be published in accordance with the requirements of Local Government Code Section 272.001, which requires publication of notice in a newspaper of general circulation on two separate occasions. The sale will not be executed until at least the 14th day after the second advertisement is published, unless the sale meets one of the exceptions of Local Government Code Section 272.001.

2. A deposit will be required to bid on the purchase of any City property. The deposit amount shall be equal to five percent (5%) of the bid amount. All deposits received will be retained until the sale is executed and full payment is received. Deposit refunds will be made to all non-winning bidders no later than the closest Friday within five business days after the City's receipt of payment on the transaction.

3. Once the bids are opened, and the best bid has been determined, unless the City chooses to follow the "upset bid" process described in Item 5 below, the bidder will be qualified or disqualified in accordance with the provisions of Item F, in

Attachment: Property Policy Manual - 07022014 (1098 : Res. No. 2014-056 Adopt Property Policy Manual)

Section II, General Provisions, above. If the bidder is qualified, the City will send a reward letter, and the bidder must pay the total amount of the bid offered to the city within five business days following the award. Payment must be in the form of cash, personal check, certified check or cashier's check made payable to the City of Texarkana, Texas. Any checks returned to the City upon presentation for deposit will be subject to the City's usual collection procedures and fees.

4. If the bidder is disqualified, or if the payment terms of item 3 are not met, the first bid will be rejected and the second bid accepted, unless the City elects to use the "upset bid" process described below in Item 5, with that bidder having five days after notification of the award to tender payment.

5. After the opportunity to bid is published, bids are opened and the best bid is determined, the City may then, at its discretion, advertise the property for an "upset" bid. To begin the upset bid process, the City will publish notice of the offer on its website. Such notice will contain a general description of the property, the amount and terms of the offer, and a notice that within ten (10) days any person may raise the bid by not less than ten percent (10%) of the first one thousand dollars and five percent (5%) of the remainder of the advertised bid price. A bidder who makes an offer in response to this notice will be required to place on deposit with the City an amount that is not less than five percent (5%) of the new bid amount. The City will then re-advertise the offer on the City's website at the increased bid amount, and this process will continue until no further qualifying bids are received, at which time the City may accept the offer and sell the property to the highest bidder. The rules of deposit from Item 2 above apply to this process, as do the rules of payment in Item 3. The City may at any and all times reject all offers.

6. If the bidder is qualified, the City will send a reward letter, and the bidder must pay the total amount of the bid offered to the city within five business days following the award. Payment must be in the form of cash, personal check, certified check or cashier's check made payable to the City of Texarkana, Texas. Any checks returned to the City upon presentation for deposit will be subject to the City's usual collection procedures and fees.

7. If the bidder is disqualified, or if the payment terms of Item 4 are not met, the first bid will be rejected and the second bid accepted, with that bidder having five days after notification of the award to tender payment.

8. All deposits presented to the City as a result of the bid process will be retained until the final sale is executed and payment is received. Once the sale process is

Attachment: Property Policy Manual - 07022014 (1098 : Res. No. 2014-056 Adopt Property Policy Manual)

complete all deposits placed by unsuccessful bidders will be returned no later than the closest Friday within five business days after the City's receipt of payment on the transaction.

VI. PLANNING AND COMMUNITY DEVELOPMENT

A. Planning and Community Development Department administers programs for the construction of residences. The programs are designed to achieve the City of Texarkana's goals to stabilize and revitalize our neighborhoods' aging stock through high quality rehabilitation and reconstruction. In addition, there are new construction and acquisition assistance programs available for a variety of housing needs. These housing programs will create housing opportunities to address the entire spectrum of citywide needs including homelessness, special needs, affordable housing and upper scale developments.

B. Returned Housing Properties: In the event a property cannot be sold through a Planning and Community Development program within a 6 month period, it may be returned to the City's available property list. The minimum sale price for these properties may be set by the Property Manager with approval from the City Manager. Properties may be sold for general ownership and neighborhood improvement requiring buyer to execute a Disclaimer and Conditions of Sale Agreement included in bid document.

Attachment: Property Policy Manual - 07022014 (1098 : Res. No. 2014-056 Adopt Property Policy Manual)

Dated: July 02, 2014

SAMPLE BID DOCUMENT

SUBMIT TO: CITY OF , TEXARKANA GENERAL SERVICES DIVISION MAILING ADDRESS: P O BOX 1967 TEXARKANA, TEXAS 75504 EXPRESS MAIL ADDRESS: 220 TEXAS BLVD TEXARKANA, TEXAS 75501	***CITY OF TEXARKANA*** **INVITATION TO BID**
CONTACT PERSON: **Sharon Moore**	
TEL: 903–798-3976 FAX: 903-798-3922 moores@txkusa.org	

TITLE: **Sale of City Owned Property** **1234 Longhorn Way, Texarkana, Texas**	NUMBER: **13-0000-14**	SUBMITTAL DEADLINE: **March 14, 2013 @ 2:00 PM CST**
PRE BID DATE, TIME AND LOCATION: **NONE**		*SUBMITTALS RECEIVED AFTER ABOVE DATE AND TIME WILL NOT BE CONSIDERED*

Enter Respondent Name:

Enter Mailing Address:

Enter the following information:

Telephone Number: *( )_____ - _____*

Fax Number: *( )_____ - _____*

Email Address: _____

Federal Tax ID Number or Social Security Number

IN COMPLIANCE WITH THIS SOLICITATION, THE UNDERSIGNED BIDDER HAVING EXAMINED THE INVITATION TO BID AND SPECIFICATIONS, AND BEING FAMILIAR WITH THE CONDITIONS TO BE MET, HEREBY SUBMITS THE FOLLOWING BID FOR FURNISHING THE MATERIAL, EQUIPMENT, LABOR AND EVERYTHING NECESSARY FOR PROVIDING THE ITEMS LISTED ON THE ATTACHED BID FORM AND AGREES TO DELIVER SAID ITEMS AT THE LOCATIONS AND FOR THE PRICES SET FORTH ON THE BID FORM. AN INDIVIDUAL AUTHORIZED TO BIND THE COMPANY MUST SIGN THE FOLLOWING SECTION. FAILURE TO EXECUTE AND SIGN THIS PORTION MAY RESULT IN BID REJECTION.

_____ _____
Authorized Signature **Title**

_____ _____
Print/Type Name **Date**

THIS FORM MUST BE COMPLETED AND RETURNED WITH YOUR RESPONSE.

Attachment: Property Policy Manual - 07022014 (1098 : Res. No. 2014-056 Adopt Property Policy Manual)

Dated: July 02, 2014

BID FORM

	Description	Quantity	Unit	Bid Amount
1	Sale of City owned Property: Location: 1234 Longhorn Way Texarkana, TX. Legal: Ghios Addition, S60', Lots 7, 8, 5911/042 09/22/10 .14 Acres, PIDN: 19785, Account No. 08460006800 Minimum Bid Requirement: $10,000.00 Bid shall comply with all attached requirements for submitting bid.	1	LOT	$

THIS FORM MUST BE COMPLETED AND RETURNED WITH YOUR RESPONSE.

Attachment: Property Policy Manual - 07022014 (1098 : Res. No. 2014-056 Adopt Property Policy Manual)

Dated: July 02, 2014

PART I
GENERAL CONDITIONS

****** PLEASE READ CAREFULLY ******

THESE GENERAL CONDITIONS APPLY TO ALL BIDS AND BECOME A PART OF THE TERMS AND CONDITIONS OF ANY BID SUBMITTED AND SUBSEQUENT PURCHASE ORDER OR CONTRACT. THE CITY SHALL MEAN THE CITY OF TEXARKANA, TEXAS.

1. **REQUIRED INFORMATION:** The bid form section of the bid packet must be completed prior to the date and time set for the bid opening and included with the bid packet or the vendor will be found non-responsive.

2. **INSTRUCTIONS:** These instructions apply to all quotations and become a part of terms and conditions of any bid packet submitted and subsequent purchase order or contract.

3. **AWARD:** The City of Texarkana, Texas reserves the right to accept or reject any and all bids in whole or in part and waive any minor technicality and enter into contract deemed to provide the **best value** to the City.

   3.1 The contract may be awarded either to the highest responsible bidder or to the bidder who provides development services at the best value for the City. In determining the best value for the City, the City may consider:

   (a) The purchase price;

   (b) The reputation and development experience of the bidder;

   (c) The quality of the bidder's development and/or construction;

   (d) The extent to which the development and/or construction meet the City's community and economic development needs;

   (e) The bidder's past relationship with the City; including zoning and code compliance related to construction, livability, and maintenance (property owners whose current inventory of properties includes condemned, abandoned, red-tagged, or, in the assessment of the City substandard properties, and/or holding property with liens are not eligible to bid, until or unless all properties are brought into compliance with relevant building and property maintenance codes and all liens are cleared;

   (f) The impact on the ability of the City to comply with laws and rules relating to contracting with Historically Underutilized Businesses and non-profit organizations employing persons with disabilities;

   (g) The total long-term cost for the City, and

   (h) Any relevant criteria specifically listed in the Invitation to Bid.

   3.2 All bids are evaluated for compliance with specifications before the bid price is considered. Failure to comply with the listed General Conditions may result in disqualification of bid.

   3.3 In case of tie bids, preference will be given to local bidders that meet all other established criteria.

   Responsible Bidder Criteria: The City shall consider only responsible Bidders. Responsible Bidders are those that have, in the sole judgment of the City, the financial ability, experience, resources, skills, capability, reliability and business integrity necessary to perform the requirements of the contract. The City may also consider references, tenant complaints and financial stability in determining a responsible Bidder.

Attachment: Property Policy Manual - 07022014 (1098 : Res. No. 2014-056 Adopt Property Policy Manual)

4. **ASSIGNMENT:** The successful bidder shall not sell, assign, transfer or convey this contract in whole, or part, without the prior written consent of the City Manager or his/her designee.

5. **LATE BIDS:** Bid packets received after submission deadline shall be returned unopened and will be considered void and unacceptable. The City is not responsible for the lateness of mail carrier, weather conditions, etc.

6. **ALTERING BIDS**: Bid prices cannot be altered or amended after submission deadline. Any interlineation alteration or erasure made before opening time must be initialed by the signer of the bid, guaranteeing authenticity.

7 **WITHDRAWAL OF BIDS**: A bid price may not be withdrawn or canceled by the bidder for a period of ninety (90) days following the date designated for the receipt of bids without written approval of the City Manager or his/her designee, and bidder so agrees upon submittal of bid.

8. **CHANGE ORDERS**: No oral statement of any person shall modify or otherwise change, or affect the terms, conditions or specifications stated in the resulting contract. All change orders to the contract will be made in writing by the City of Texarkana, Texas.

9**.** **ADDENDA**: Any interpretations, corrections or changes to this bid packet will be made by addenda. Sole issuing authority shall be vested in the City of Texarkana, Texas City Manager or his/her designee. Addenda will be sent to all who are known to have received a copy of this bid packet. If the addenda contain changes to the "specification" or "bid form", bidders shall acknowledge receipt of all addenda or they will be declared non-responsive.

10. **INDEMNIFICATION AGREEMENT:** Contractor, for itself and its agents, employees and subcontractors, shall defend, indemnify, and hold the City, its officers, agents, employees, contractors, elected officials, legal representatives, successors and assigns (collectively the "City"), harmless form all liability, suits, causes of action, lawsuits, judgments, claims, damages, penalties, fines, costs, fees or expenses, including attorney's fees and costs of defense, for any environmental issues contained within or on the property, injury to or the death of any person or damage to or destruction of any property arising out of or resulting from or based upon, in whole or part, any act or omission of contractor, its officers, employees, contractors, subcontractors and agents under this contract.

11. Property is sold "AS IS" and bidder assumes all responsibility for condition of property including but not limited to environmental issues, liens, removal or eviction of occupants and their possessions, and materials, fixtures, vehicles, debris, and rubbish, on property at time of bid.

12. **TERMINATION FOR DEFAULT**: The City reserves the right to enforce the performance of this contract in any manner prescribed by law or deemed to be in the best interest of the City in the event of breach or default of this contract. The City reserves the right to terminate the contract immediately in the event the successful bidder fails to perform in accordance with these specifications.

13. **VENUE:** This agreement will be governed and constructed according to the laws of the State of Texas. This agreement is performable in Bowie County, Texas.

14. **NO PROHIBITED INTEREST:** Bidder acknowledges and represents that they are aware of the laws, City charter, and City code of conduct regarding conflicts of interest. The City charter states that "no officer or employee of the City shall have a financial interest, direct or indirect, in any contract with the City, nor shall be financially interested, directly or indirectly, in the sale to the City of any land, or rights or interest in any land, materials, supplies or service".

15. **PREPARATION COST:** The City will not be liable for any costs associated with the preparation, transmittal, or presentation of any proposals or materials submitted in response to any bid, quotation,

Attachment: Property Policy Manual - 07022014 (1098 : Res. No. 2014-056 Adopt Property Policy Manual)

or proposal. Bidder assumes all cost associated with the transfer of property, including but not limited to surveys. Any desired property studies or reports, title searches and closing costs.

16. **MINOR DEFECT:** The City reserves the right to waive any minor defect, irregularity, or informality in any bid. The City may also reject any or all bids without cause prior to award.

17. **BID OPENINGS:** All bids submitted will be read at the City's regularly scheduled bid opening for the designated project. However, the reading of a bid at bid opening should not be construed as a comment on the responsiveness of such bid or as any indication that the City accepts such bid as responsive. The City will make a determination as to the responsiveness of bids submitted based upon compliance with all applicable laws, City of Texarkana, Texas project documents, including but not limited to the project specifications and contract documents. The City will notify the successful bidder upon award of the contract and, according to state law; all bids received will be available for inspection at that time.

18. **FORCE MAJEURE:** Neither party shall be held responsible for losses or damages hereunder, if the fulfillment of any terms of provisions of the contract is delayed or prevented by strike, walkouts, acts of god, or public enemy, fire, or flood.

19. **CONFLICT OF INTEREST:** The bidder shall not offer or accept gifts or anything of value nor enter into any business arrangement with any employee, official or agent of the City of Texarkana, Texas. By signing and executing this bid, the bidder certifies and represents to the City the bidder has not offered, conferred or agreed to confer any pecuniary benefit or other thing of value for the receipt of special treatment, advantage, information, recipient's decision, opinion, recommendation, vote or any other exercise of discretion concerning this bid.

20. **PERMITS:** Successful bidder is responsible for obtaining any and all City permits the construction or renovation/remolding job requires within 90 days of property acquisition. Bidder agrees to keep all permits current through construction period. Bidder agrees to complete construction within 365 days of property acquisition. Bidder agrees property will not be occupied until the City issues a Certificate of Occupancy. Renovation and new construction will be conducted in accordance with City specifications, code, ordinances, and applicable State and Federal laws.

21. **DEMOLITION:** If demolition is required or to be performed on the property the successful bidder agrees to obtain a demolition permit within 90 days of property acquisition and to maintain the permit until completion project. Bidder agrees to demolish the property and remove all debris from the site within 180 days of property acquisition. Demolition will be conducted in accordance with City specifications, code, ordinances, and applicable State and Federal laws.

22. **TRANSFER OF PROPERTY**: Owner agrees to hold property for minimum of 12 months. Exception: If the property is issued a Certificate of Occupancy prior to the expiration of the 12 month ownership requirement, the owner may sell the property to another buyer. The City at its discretion may accept the property back from the owner should the owner believe they would not be able to complete the project within the specified time frames. All costs associated with the transfer of the property back to the City will be borne by the owner.

23. **ZONING:** All modifications to property or new construction on property must comply with City of Texarkana Texas neighborhood design and zoning requirements and guidelines.

Attachment: Property Policy Manual - 07022014 (1098 : Res. No. 2014-056 Adopt Property Policy Manual)

Dated: July 02, 2014

Part II
ADDITIONAL CONDITIONS

The following are additional conditions to the award of any bid:

A. The successful bidder will provide the full name of the purchaser as it should appear in an instrument of conveyance

B. The property shall be sold **"AS IS".**

C. The successful bidder shall pay for all costs associated with conveyance of title including, but not limited to, attorney's fees, title insurance, filling fees, etc.

D. The attached "Deed Without Warranty" is the instrument the City will use to convey the tract of land.

E. No City employee shall have a direct or indirect financial interest in any contract with the City, or be directly or indirectly financially interested in the sale of land, materials, supplies or services to the City.

F. Effective January 1, 2006, Chapter 176 of the Texas Local Government Code requires that any vendor or person considering doing business with a local government entity disclose in the Questionnaire Form CIQ, the vendor or person's affiliation or business relationship that might cause a conflict of interest with a local government entity. By law, this questionnaire must be filed with the records administrator of the City of Texarkana not later than the 7th business day after the date the person becomes aware of facts that require the statement to be filed. See Section 176.006, Local Government Code. A person commits an offense if the person violates Section 176.006, Local Government Code. An offense under this section is a Class C misdemeanor. Chapter 176 and the questionnaire may be found at http://www.ci.texarkana.tx.us/departments/purchasing/conflict-of-interest.html. By submitting a response to this request, vendor represents that it is in compliance with the requirements of Chapter 176 of the Texas Local Government Code.

Attachment: Property Policy Manual - 07022014 (1098 : Res. No. 2014-056 Adopt Property Policy Manual)

Dated: July 02, 2014

Disclaimers and Conditions of Sale Agreement

RETURN THIS FORM WITH BID

I, _____, as bidder and potential buyer of the property located at _____**,** do hereby agree and accept that this transaction is contingent upon the following terms and conditions:

Disclaimers

a. the property is being sold on an "AS IS" basis;

b. the City of Texarkana makes no warranty concerning zoning or suitability of the property for any specific purpose or use;

c. Property is sold "**AS IS**" bidder assumes all responsibility for condition of property including but not limited to environmental issues, liens, removal or eviction of occupants and their possessions, and materials, fixtures, vehicles, debris, and rubbish, on property at time of bid;

d. it is buyer's responsibility to examine all applicable building codes and ordinances to determine if the property in question can be used for buyer's intended purpose. All modifications to property or new construction on property must comply with City of Texarkana Texas neighborhood design and zoning requirements and guidelines

e. if the property being purchased includes a structure and the condition of that structure is in violation of any construction and building codes, all violations and deficiencies must be repaired/renovated in strict adherence with the procedures and timelines specified in the related Code Inspection Condition Report. **No work can begin until the property has been legally conveyed to the Buyer and appropriate permits are issued.**

Conditions

a. the buyer must, at all times, maintain the property at or above all City Code Standards;

b. the buyer may not sell this property until the property has been demolished and cleared, renovation, or new construction has been completed in accordance with City specifications, code, ordinances, and applicable State and Federal laws. Failure of the buyer to fully comply may, at the city's sole discretion, result in additional compensation to be paid by buyer to the city equal to 50% of the initial purchase price and any profit realized from the prohibited re-sale shall be paid to the city as a penalty for breach of terms and conditions of the initial sale.

c. in the event, at any time, the buyer elects to build a structure on the purchased property, the buyer acknowledges that such structure must be compatible with the neighborhood character and style of other structures located in the same block and must be formally approved in advance by the related City of Texarkana inspections and/or plan review departments in accordance with city ordinances.

Agreed and Accepted:

_____ _____

Bidder's Name Date

Attachment: Property Policy Manual - 07022014 (1098 : Res. No. 2014-056 Adopt Property Policy Manual)

Dated: July 02, 2014

This document will be executed by the successful bidder.
DEED WITHOUT WARRANTY

STATE OF TEXAS §
§ **KNOW ALL BY THESE PRESENTS: COUNTY OF**
BOWIE §

That the City of Texarkana, Texas, a Texas home-rule municipality ("Grantor"), for and in consideration of _____ dollars and _____cents **($0.00)** and other good and valuable consideration to Grantor, the receipt and sufficiency of which is hereby acknowledged, paid in hand by the_____ , ("Grantee"), has **GRANTED, SOLD AND CONVEYED,** and by these presents does **GRANT, SELL AND CONVEY** unto Grantee all that certain lot, tract, or parcel of land situated in the County of Bowie, State of Texas, and more particularly described in bid documents xx-xxxx-xx attached hereto and incorporated herein by reference (the "Land");

Location: 1234 Longhorn Way, Texarkana, TX.

Legal: Ghios Addition, S60', Lots 7, 8, 5911/042 09/22/10
.14 Acres, PIDN: 19785, Account No. 08460006800

City of Texarkana, Bowie County, Texas

THIS DEED IS MADE WITHOUT WARRANTY, EXPRESS OR IMPLIED, AND GRANTOR EXPRESSLY DISCLAIMS, EXCEPTS AND EXCLUDES ANY AND ALL WARRANTIES OF TITLE OR OTHERWISE FROM THIS CONVEYANCE, INCLUDING - WITHOUT LIMITATION - ANY WARRANTIES ARISING UNDER COMMON LAW OR UNDER SECTION 5.023 OF THE TEXAS PROPERTY CODE OR OTHER STATUTE. BY ACCEPTANCE OF THIS DEED, GRANTEE ACKNOWLEDGES THAT THE LAND IS CONVEYED "AS IS - WHERE IS, WITH ALL FAULTS".

TO HAVE AND TO HOLD the Land, together with all and singular the rights and appurtenances thereto and in anywise belonging unto Grantee, his heirs, successors and assigns forever; **WITHOUT WARRANTY AND SUBJECT IN ALL RESPECTS TO THE DISCLAIMERS SET FORTH ABOVE.**

EXECUTED this the_____ day of _____ , 20___

GRANTOR:

CITY OF TEXARKANA, TEXAS

_____

CITY MANAGER

Attachment: Property Policy Manual - 07022014 (1098 : Res. No. 2014-056 Adopt Property Policy Manual)

Dated: July 02, 2014

ACKNOWLEDGMENT

STATE OF TEXAS **§ §**
COUNTY OF BOWIE **§**

This instrument was acknowledged before me on the _____ day of

_____, 20_____, by _____, City Manager of the City of

Texarkana, Texas, on behalf of the City.

GIVEN UNDER MY HAND AND SEAL OF OFFICE this the _____day of _____, 20___.

_____

Notary Public in and for the State of Texas

Attachment: Property Policy Manual - 07022014 (1098 : Res. No. 2014-056 Adopt Property Policy Manual)

City of Texarkana, Texas

Version: B

Briefing Sheet

Update Date: 7/1/2014 4:41 PM

Lead Department: Public Works **Action Officer:** Debbie Burk,

Subject: Public Hearing and Consider Ordinance No. 2014-081 granting a Specific Use Permit to allow the location of outdoor display rental equipment on Lots 1-8, Block 7, Estes Addition, located at 2022 Texas Boulevard. CHECKK Properties, owner. David Hughes, agent.

Briefing: 7/14/2014	**Public Hearing:** 7/14/2014	**Second Briefing:**	**Council Vote:** 7/14/2014

Item Schedule

Schedule 1: Brief twice - vote once (six weeks)

Updates/History of Briefing:

Not applicable.

Executive Summary and Background Information:

S-655: This is a request by CHECKK Properties, owner, and David Hughes, Contractor Sales and Rentals, agent, for a Specific Use Permit to allow outdoor display of rental equipment on Lots 1-8, Block 7, Estes Addition, located at 2022 Texas Boulevard. The current use is a vacant commercial building that is being remodeled to allow a new outdoor display rental equipment business.

The adjacent zoning is General Retail to the north, MF-1 to the east, and Commercial to the south and west. The adjacent land use is vacant lots to the north and south and business uses to the west and a business use and residences to the east.

The Comprehensive Plan has designated this as a retail area.

Several outdoor display rental equipment businesses have continually located on this tract as non-conforming uses for many years. A Specific Use Permit is required along with General Retail zoning to allow outdoor display of rental equipment. In the process of checking for a change in the certificate of occupancy for the new tenant (Contractor Sales and Rentals), it was discovered that a Specific Use Permit was never obtained at this location. Since this business was vacant for more than 6 months, it lost the non-conforming status. The applicant is requesting this Specific Use Permit in order to bring this non-conforming use into compliance.

All notification and application requirements have been met to consider this request.

Potential Options:

None

Fiscal Implications:

None

Staff Recommendation:

City of Texarkana, Texas

Since the property was previously used for this type of use for many years with no adverse impact on the area, staff recommends for approval of the request.

Advisory Board/Committee Review:

Planning and Zoning Commission

Board/Committee Recommendation:

The Planning and Zoning Commission unanimously recommended for approval of this request.

Advisory Board/Committee Meeting Date and Minutes:

June 2, 2014

Attachments

a. Ordinance No. 2014-081 (DOCX)
b. Goals and Perspectives (DOCX)
c. Maps for Ord. No. 2014-081 (PDF)

Staff Coordination

Assistant City Manager	Shirley Jaster	Department Head Review	Completed	06/18/2014 3:44 PM
Public Information Officer	Lisa Thompson	PIO Review	Completed	06/18/2014 3:45 PM
City Manager	John Whitson	City Manager Review	Completed	06/19/2014 7:16 AM
City Council	Jennifer Evans	Meeting	Completed	06/25/2014 3:07 PM

Meeting History

06/23/14 City Council MOVED FORWARD Next: 07/14/14
David Hughes of, Contractor Sales and Rentals, briefed this item.

S-655

ORDINANCE NO. 2014-081

AN ORDINANCE OF THE CITY COUNCIL OF THE CITY OF TEXARKANA, TEXAS, AMENDING THE ZONING MAP SHOWING THE LOCATION, BOUNDARY AND USE OF CERTAIN PROPERTY BY THE GRANTING OF SPECIFIC USE PERMIT NO. S-655 TO ALLOW THE LOCATION OF OUTDOOR DISPLAY RENTAL EQUIPMENT ON LOTS 1-8, BLOCK 7, ESTES ADDITION, LOCATED AT 2022 TEXAS BOULEVARD IN THE CITY OF TEXARKANA, BOWIE COUNTY, TEXAS; CONTAINING A REPEALER CLAUSE; CONTAINING A SEVERABILITY CLAUSE; AND ESTABLISHING AN EFFECTIVE DATE.

WHEREAS, an application has been filed with the City of Texarkana, Texas, requesting an Amendment to the Zoning Ordinance so as to grant a **Specific Use Permit** to allow the **location of outdoor display rental equipment** on Lots 1-8, Block 7, Estes Addition, located at 2022 Texas Boulevard in the City of Texarkana, Bowie County, Texas; and

WHEREAS, the Planning and Zoning Commission of the City of Texarkana, Texas and the City Council of the City of Texarkana, Texas, in compliance with the laws of the State of Texas with reference to the granting of zoning classifications and changes, have given the requisite notices by publication and otherwise, and after holding hearings and affording a full and fair hearing to all property owners generally and to all persons interested and situated in the affected area and in the vicinity thereof; and

WHEREAS, after consideration of said application, the Planning and Zoning Commission of the City of Texarkana, Texas, voted **unanimously Six (6) to Zero (0) to recommend** to the City Council of the City of Texarkana, Texas **that a Specific Use Permit be granted to allow the location of outdoor display rental equipment** on said property; and

WHEREAS, after consideration of said application and the recommendation of the Planning and Zoning Commission, the City Council of the City of Texarkana, Texas, does hereby find that granting the **Specific Use Permit** is in the best interest of the public health, safety, morals and general welfare of the City;

NOW, THEREFORE, BE IT ORDAINED BY THE CITY COUNCIL OF THE CITY OF TEXARKANA, TEXAS:

SECTION 1: That the Zoning Ordinance of the City of Texarkana, Texas, Ordinance No. 127-70, passed and approved on September 14, 1970, be further amended so as to grant a **Specific Use Permit numbered S-655 for the purpose of allowing the location of outdoor display rental equipment** on the following described property, to-wit: **Lots 1-8, Block 7, Estes Addition, located at 2022 Texas Boulevard in the City of Texarkana, Bowie County, Texas.**

SECTION 2: All ordinances or parts of ordinances in conflict herewith are specifically repealed to the extent of such conflict.

Attachment: Ordinance No. 2014-081 [Revision 2] (1137 : Ord. 2014-081 (S-655: SUP for outdoor storage at 2022 Texas Blvd.))

SECTION 3: It is further provided that in case a section, clause, sentence or part of this Ordinance shall be deemed or adjudged by a court of competent jurisdiction to be invalid, then such invalidity shall not affect, impair, or invalidate the remainder of this Ordinance.

SECTION 4: That this Ordinance shall be in full force and effect from and after its passage and approval.

PASSED AND APPROVED in regular Council Session on this the 11th day of August, 2014.

ATTEST:

JENNIFER EVANS, CITY SECRETARY	BOB BRUGGEMAN, MAYOR

Attachment: Ordinance No. 2014-081 [Revision 2] (1137 : Ord. 2014-081 (S-655: SUP for outdoor storage at 2022 Texas Blvd.))

City of Texarkana, Texas

Developing Perspectives and Goals Pending Approval by the City Council:

Perspectives	Goals
Serve the Community	☐ Promote an Environmentally Sensitive & Livable Community ☐ Provide a Safe Community ☐ Deliver Quality Services ☐ Foster a Healthy Community
Run the Operations	☐ Enhance Community Preparedness & Responsiveness ☐ Maximize Partnership Opportunities ☐ Provide Courteous & Responsive Customer Service ☑ Model a Positive City Image ☐ Deliver Efficient Services ☑ Cultivate Community Involvement & Access
Manage the Resources	☐ Maintain Fiscal Strength ☐ Maximize Utilization & Resources ☐ Invest in Infrastructure & Transportation
Develop Personnel	☐ Develop a Skilled & Diverse Workforce ☐ Create a Positive & Rewarding Work Culture

Perspectives and Goals Additional Comments:

None

Resource Impact:

Staff time required if item is approved:	Select One By Clicking Here

Other Potential Impacts:

None applicable.

Public Information Plan:

☑	Newspaper Notice (Required by Statute)	☑	Public Hearing (Required by Statute)
☐	Public Forum/Input Session	☐	Press Release
☐	E-News Distribution	☑	Website Notice
☐	Social Media (Twitter, Facebook, etc.)	☑	Special Mailing
☐	Flyers Posted	☐	Banners Posted
☐	Survey	☐	Automated Phone Call
☐	None Required	☑	Sign posted

Other:

Attachment: Goals and Perspectives (1137 : Ord. 2014-081 (S-655: SUP for outdoor storage at 2022 Texas Blvd.))

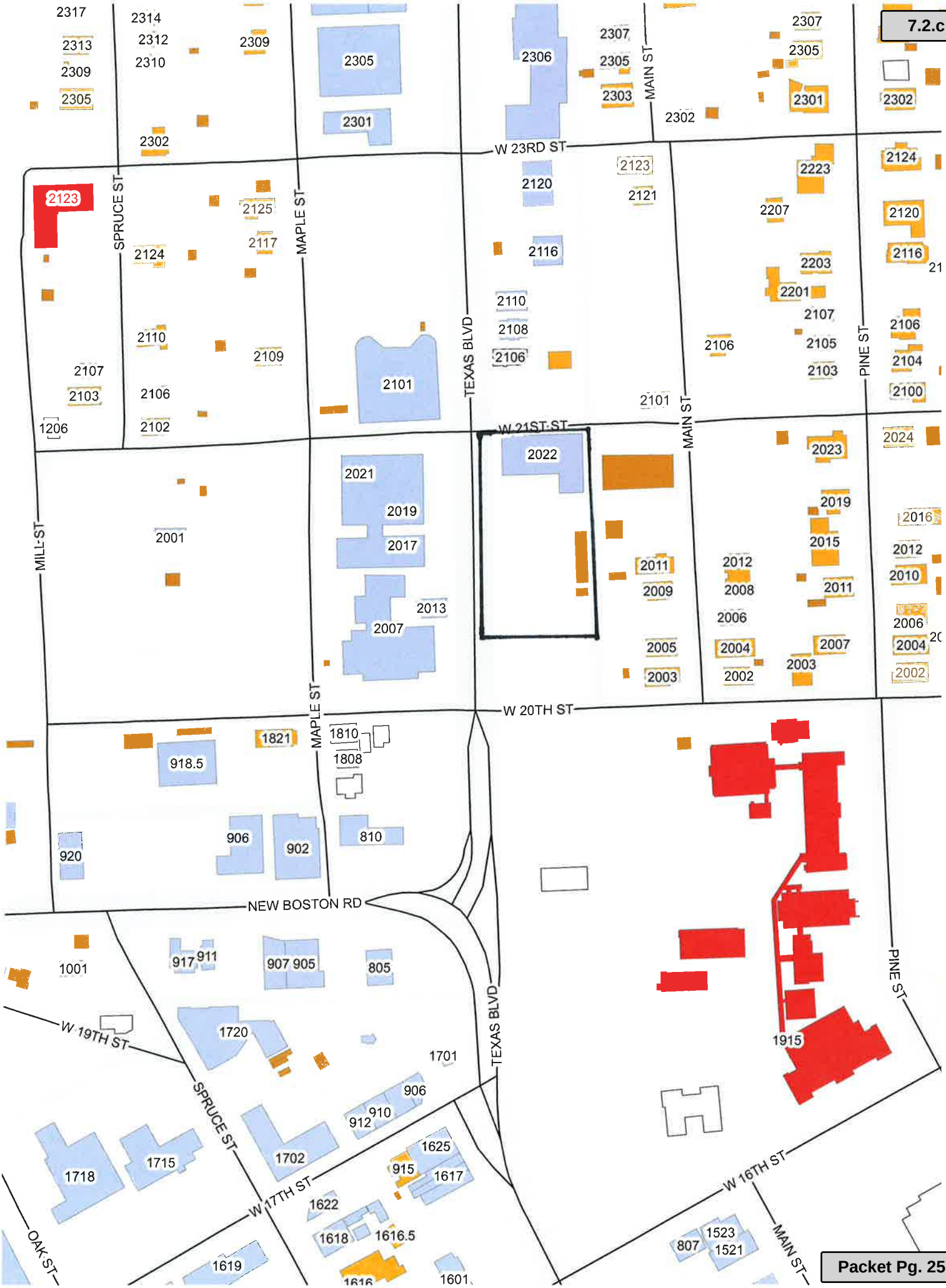

Attachment: Maps for Ord. No. 2014-081 (1137 : Ord. 2014-081 (S-655: SUP for outdoor storage at 2022 Texas Blvd.))

Attachment: Maps for Ord. No. 2014-081 (1137 : Ord. 2014-081 (S-655: SUP for outdoor storage at 2022 Texas Blvd.))

City of Texarkana, Texas

Version: A

Briefing Sheet

Update Date: 6/18/2014 10:05 AM

Lead Department: City Engineer **Action Officer:** Kyle Dooley,

Subject: Resolution No. 2014-072 changing the remaining sections of old Lake Drive to Bertha Street, north of the Union Pacific Railroad and to McShane Street, south of the Union Pacific Railroad, due to the reconfiguration of Lake Drive and the construction of the Willie J. Ray Overpass.

Briefing: 7/14/2014	**Public Hearing:** 7/14/2014	**Second Briefing:** July 28, 2014	**Council Vote:** 8/11/2014

Item Schedule

Schedule 1: Brief twice - vote once (six weeks)

Updates/History of Briefing:

NOT APPLICABLE

Executive Summary and Background Information:

The Texas Department of Transportation (TxDOT) completed the construction of the Willie J. Ray Overpass. As part of that construction project, two portions of the old Lake Drive pavement remained to serve as streets providing access to properties on the east side of the project. Neither of these street sections were named during or after the completion of the overpass project. Staff is proposing to name these remaining street sections.

One of these street sections is north and one is south of the Union Pacific Railroad. The street section north of the railroad connects at the north end to Lake Drive at the Bertha Street intersection and runs south to an intersection with North Street. The street section south of the railroad starts at McShane Street and runs south to Keel Street.

Potential Options:

- None
-

Fiscal Implications:

There will be minimal fiscal implications. The only costs will be new street name signs. These costs are currently budgeted in the Sign and Signal Division's budget.

Staff Recommendation:

Staff recommends these proposed street name changes.

Advisory Board/Committee Review:

NONE

Board/Committee Recommendation:

NOT APPLICABLE

City of Texarkana, Texas

Advisory Board/Committee Meeting Date and Minutes:

NOT APPLICABLE

Attachments

a. Goals and Perspectives (DOCX)
b. Res No 2014-72 Renaming remaining portions of old Lake Drive (DOC)
c. Exhibit "A" Map of Street Name Change of old Lake Drive (PDF)

Staff Coordination

Public Works Department	Completed	Kyle Dooley 06/10/2014 2:54 PM	Department Head Review	
Municipal Services and Public Works	Completed	Shirley Jaster 06/10/2014 5:09 PM	MS & PW Review	
Public Information Officer	06/23/2014 6:30 PM	Jennifer Evans	PIO Review	Skipped
City Manager	John Whitson	City Manager Review	Completed	07/03/2014 10:23 AM
City Council	Jennifer Evans	Meeting	Completed	06/25/2014 3:07 PM

Meeting History

06/23/14 City Council MOVED FORWARD Next: 07/14/14
Kyle Dooley briefed this item.

City of Texarkana, Texas

Developing Perspectives and Goals Pending Approval by the City Council:

Perspectives	Goals
Serve the Community	☐ Promote an Environmentally Sensitive & Livable Community ☐ Provide a Safe Community ☑ Deliver Quality Services ☐ Foster a Healthy Community
Run the Operations	☐ Enhance Community Preparedness & Responsiveness ☐ Maximize Partnership Opportunities ☐ Provide Courteous & Responsive Customer Service ☐ Model a Positive City Image ☑ Deliver Efficient Services ☐ Cultivate Community Involvement & Access
Manage the Resources	☐ Maintain Fiscal Strength ☐ Maximize Utilization & Resources ☐ Invest in Infrastructure & Transportation
Develop Personnel	☐ Develop a Skilled & Diverse Workforce ☐ Create a Positive & Rewarding Work Culture

Perspectives and Goals Additional Comments:

NONE

Resource Impact:

Staff time required if item is approved:	Low

Other Potential Impacts:

NONE APPLICABLE

Public Information Plan:

☐	Newspaper Notice (Required by Statute)	☐	Public Hearing (Required by Statute)
☑	Public Forum/Input Session	☐	Press Release
☐	E-News Distribution	☐	Website Notice
☐	Social Media (Twitter, Facebook, etc.)	☐	Special Mailing
☐	Flyers Posted	☐	Banners Posted
☐	Survey	☐	Automated Phone Call
☐	None Required	☐	

Other:

Attachment: Goals and Perspectives (1127 : Res. No. 2014-072 Renaming remaining portions of old Lake Drive)

RESOLUTION NO. 2014-072

A RESOLUTION OF THE CITY COUNCIL OF THE CITY OF TEXARKANA, TEXAS, CHANGING THE REMAINING SECTIONS OF OLD LAKE DRIVE TO BERTHA STREET, NORTH OF THE UNION PACIFIC RAILROAD, AND McSHANE STREET, SOUTH OF THE UNION PACIFIC RAILROAD, DUE TO THE RECONFIGURATION OF LAKE DRIVE AND THE CONSTRUCTION OF THE WILLIE J. RAY OVERPASS; AND ESTABLISHING AN EFFECTIVE DATE.

WHEREAS, the City of Texarkana, Texas, has received maintenance responsibility from the Texas Department of Transportation for the remaining sections of old Lake Drive due to the reconfiguration of Lake Drive and the construction of the Willie J. Ray Overpass; and

WHEREAS, these two remaining sections of old Lake Drive should be renamed to avoid confusion with the newly reconfigured portion of Lake Drive;

NOW, THEREFORE BE IT RESOLVED BY THE CITY COUNCIL OF THE CITY OF TEXARKANA, TEXAS:

SECTION 1: That the name of the remaining section of old Lake Drive, north of the Union Pacific Railroad, changed due to the reconfiguration of Lake Drive and the construction of the Willie J. Ray Overpass, be officially changed to **Bertha Street**.

SECTION 2: That the name of the remaining section of old Lake Drive, south of the Union Pacific Railroad, changed due to the reconfiguration of Lake Drive and the construction of the Willie J. Ray Overpass, be officially changed to **McShane Street**.

SECTION 3 That this change in names shall not become effective until thirty (30) days after the date of passage of this Resolution, so as to provide sufficient time for street sign changes, postal service adjustments, and business and personal address changes to be implemented by those affected by the change.

SECTION 4: That this Resolution shall be in full force and effect from and after its passage and approval.

PASSED AND APPROVED in Regular Council Session on this the 11th day of August, 2014.

ATTEST:

_____ _____

JENNIFER EVANS, CITY SECRETARY BOB BRUGGEMAN, MAYOR

Attachment: Res No 2014-72 Renaming remaining portions of old Lake Drive [Revision 1] (1127 : Res. No. 2014-072 Renaming remaining

Proposed Street Name Changes

Attachment: Exhibit "A" Map of Street Name Change of old Lake Drive (1127 : Res. No. 2014-072 Renaming remaining portions of old Lake

City of Texarkana, Texas

Version: H

Briefing Sheet

Update Date: 6/20/2014 12:40 PM

Lead Department: Finance Department **Action Officer:** Charlie Bassett, CFO

Subject: Ordinance No. 2014-073 amending the budget estimate of the revenues and expenditures for the fiscal year ending September 30, 2014, and adopting the budget and appropriating resources for the fiscal year beginning October 1, 2014 and ending September 30, 2015.

Briefing:	7/14/2014	**Public Hearing:**	7/14/2014	**Second Briefing:**	July 28, 2014	**Council Vote:**	8/11/2014

Item Schedule
Schedule 1: Brief twice - vote once (six weeks)

Updates/History of Briefing:

(Insert Date Here):
NOT APPLICABLE

Executive Summary and Background Information:

The purpose of this ordinance is to approve amendments to the original adopted budget for revenues and expenditures for the fiscal year ending September 30, 2014, based on our most current estimates, and to adopt the budget and appropriate resources for the fiscal year beginning October 1, 2014 and ending September 30, 2015. The links that follow provide access to the full draft budget documents for both the City and Texarkana Water Utilities:

Proposed FY 2015 City Budget

http://www.ci.texarkana.tx.us/DocumentCenter/View/1998

Proposed FY 2015 TWU Budget

http://twu.txkusa.org/documents/budget/FY2015%20TWU%20Draft%20Budget.pdf

Potential Options:

- Approve as presented
- Propose changes prior to approval

Fiscal Implications:

Adjustment of currently adopted budget for changes in revenues and expenditures expected through the end of the current fiscal year (09/30/14), and appropriation of necessary resources for the upcoming fiscal year (09/30/15).

City of Texarkana, Texas

Staff Recommendation:
Approval

Advisory Board/Committee Review:
NONE

Board/Committee Recommendation:
NOT APPLICABLE

Advisory Board/Committee Meeting Date and Minutes:
NOT APPLICABLE

Attachments
a. Goals and Perspectives (DOCX)
b. Budget Highlights Presentation (PDF)
c. Ordinance No 70-2014 FY 2015 Budget (DOCX)
d. FY15 TWU Budget Operating Budget 15-14 Comparison (PDF)

Staff Coordination

Finance Department	Charlie Bassett	Department Head Review	Completed	06/20/2014 12:41 PM
Public Information Officer	Lisa Thompson	PIO Review	Completed	06/20/2014 12:50 PM
City Manager	John Whitson	City Manager Review	Completed	06/20/2014 1:40 PM
City Council	Jennifer Evans	Meeting	Completed	06/25/2014 3:07 PM

Meeting History
06/23/14 City Council MOVED FORWARD Next: 07/14/14
Charlie Bassett briefed this item and thanked the finance department staff for their efforts in preparing the 2014-15 city budget. Bill King briefed the Texarkana Water Utilities (TWU) budget. Jim Cornelius briefed additional items for the TWU budget.
(Councilmember Davis left the meeting at 8:09 p.m. and returned to the meeting at 8:12 p.m.)

City of Texarkana, Texas

Developing Perspectives and Goals Pending Approval by the City Council:

Perspectives	Goals
Serve the Community	☐ Promote an Environmentally Sensitive & Livable Community ☐ Provide a Safe Community ☑ Deliver Quality Services ☐ Foster a Healthy Community
Run the Operations	☐ Enhance Community Preparedness & Responsiveness ☐ Maximize Partnership Opportunities ☐ Provide Courteous & Responsive Customer Service ☐ Model a Positive City Image ☑ Deliver Efficient Services ☐ Cultivate Community Involvement & Access
Manage the Resources	☑ Maintain Fiscal Strength ☑ Maximize Utilization & Resources ☐ Invest in Infrastructure & Transportation
Develop Personnel	☐ Develop a Skilled & Diverse Workforce ☐ Create a Positive & Rewarding Work Culture

Perspectives and Goals Additional Comments:

NONE

Resource Impact:

Staff time required if item is approved:	High

Other Potential Impacts:

NONE APPLICABLE

Public Information Plan:

☑	Newspaper Notice (Required by Statute)	☑	Public Hearing (Required by Statute)
☐	Public Forum/Input Session	☐	Press Release
☐	E-News Distribution	☑	Website Notice
☑	Social Media (Twitter, Facebook, etc.)	☐	Special Mailing
☐	Flyers Posted	☐	Banners Posted
☐	Survey	☐	Automated Phone Call
☐	None Required	☐	

Other:

Attachment: Goals and Perspectives (1126 : Ordinance No. 2014-073 Budget)

CITY OF TEXARKANA, TEXAS

BUDGET HIGHLIGHTS

FISCAL YEAR ENDING 9/30/15

Attachment: Budget Highlights Presentation (1126 : Ordinance No. 2014-073 Budget)

DRAFT

GENERAL FUND SUMMARY

	ACTUAL 12-13	ADOPTED 13-14	REVISED 13-14	PROPOSED 14-15
GEN FUND BAL OCT 1	*8,850,969*	*9,079,932*	*10,792,317*	*11,042,437*
REVENUES				
GENERAL PROPERTY TAX	10,699,854	10,351,334	10,660,532	10,616,498
TAXES - OTHER	14,445,326	14,615,500	14,747,017	15,039,812
FRANCHISE TAXES	1,639,003	1,646,650	1,733,295	1,750,624
FEES AND PERMITS	197,996	181,580	162,252	163,871
CHARGES FOR SERVICES	5,734,908	5,656,230	5,615,625	954,740
FINES AND FORFEITURES	1,625,037	1,636,687	1,592,861	1,607,171
GRANTS AND ENTITLEMENTS	165,188	1,119,905	273,246	774,699
INTERGOVERNMENTAL REVENUE	199,716	220,650	198,784	201,602
OTHER REVENUE	134,482	274,700	237,093	76,235
INTEREST INCOME	54,171	43,382	2,874	30,068
RENTAL INCOME	14,895	17,185	16,267	15,056
TRANSFERS IN	2,023,621	337,712	117,283	550,650
TOTAL REVENUE	**36,934,197**	**36,101,515**	**35,357,129**	**31,781,026**
EXPENDITURES				
GENERAL GOVERNMENT	3,303,901	2,466,491	2,469,514	2,784,867
VETERAN'S OFFICE	11,237	11,060	11,060	11,060
NON-OPERATING	5,591,115	5,606,644	5,555,146	5,391,751
REFUSE SERVICES	4,616,624	4,864,000	4,666,426	-
POLICE	9,467,714	9,228,646	9,249,489	9,448,520
FIRE AND EMERGENCY MANAGEMENT	6,061,501	5,850,000	5,850,000	5,988,999
PUBLIC WORKS	3,699,149	4,730,662	3,963,459	4,557,910
PLANNING AND COMMUNITY DEVELOPMENT	429,518	318,457	358,615	512,147
INSPECTIONS AND CODE ENFORCEMENT	1,057,758	1,159,705	1,121,517	1,170,627
PARKS AND RECREATION AND COMM HEALTH	1,606,578	1,865,849	1,861,783	1,896,925
TOTAL EXPENDITURES	**35,845,095**	**36,101,514**	**35,107,009**	**31,762,806**
INVESTMENT IN JOINT VENTURE (101)	98,990			
ASSIGNED FUND BALANCE (101,104,113)	36,022			
RESTRICTED FUND BALANCE (101,102,107,114,605)	330,049			
UNASSIGNED FUND BALANCE (103,105,109,115,704)	387,261			
OTHER	(76)			
NET CHANGE IN DESIGNATED RESERVES	**852,246**	-	-	-
GEN FUND END BAL SEPT 30	*10,792,317*	*9,079,933*	*11,042,437*	*11,060,657*
DAYS OF EXPENDITURES	110	92	115	127
PERCENT OF EXPENDITURES	30%	25%	31%	35%

Attachment: Budget Highlights Presentation (1126 : Ordinance No. 2014-073 Budget)

DRAFT

DESIGNATED RESERVE FUND BALANCES

101 GENERAL FUND	RESERVED FOR INVESTMENT IN JOINT VENTURE - BCAD	**98,990**
101 GENERAL FUND	ASSIGNED FOR POLICE DOG	1,030
101 GENERAL FUND	ASSIGNED FOR POLICE EQUIPMENT	1,885
104 WORKER'S COMPENSATION FUND	ASSIGNED FUND BALANCE	9,012
113 ENERGY CONSERVATION LOAN FUND	ASSIGNED FUND BALANCE	24,095
		36,022
101 GENERAL FUND	HOUSING FINANCE RESTRICTED FUND BALANCE	2,250
102 NARCOTICS DIVISION FUND	RESTRICTED FUND BALANCE	223,911
107 COURT SECURITY FUND	RESTRICTED FUND BALANCE	17,711
114 COURT TECHNOLOGY FUND	RESTRICTED FUND BALANCE	11,395
605 FEDERAL ASSET FORFEITURE FUND	RESTRICTED FUND BALANCE	74,782
		330,049
103 PERSONNEL POLICY FUND	UNASSIGNED FUND BALANCE	11,688
105 PAYROLL FUND	UNASSIGNED FUND BALANCE	48
109 PROPERTY & LIABILITY FUND	UNASSIGNED FUND BALANCE	49,449
115 TECHNOLOGY FUND	UNASSIGNED FUND BALANCE	374,613
704 CAPITAL REPLACEMENT FUND	UNASSIGNED FUND BALANCE	(48,537)
		387,261
OTHER		**(76)**
TOTAL		**852,246**

Attachment: Budget Highlights Presentation (1126 : Ordinance No. 2014-073 Budget)

DRAFT

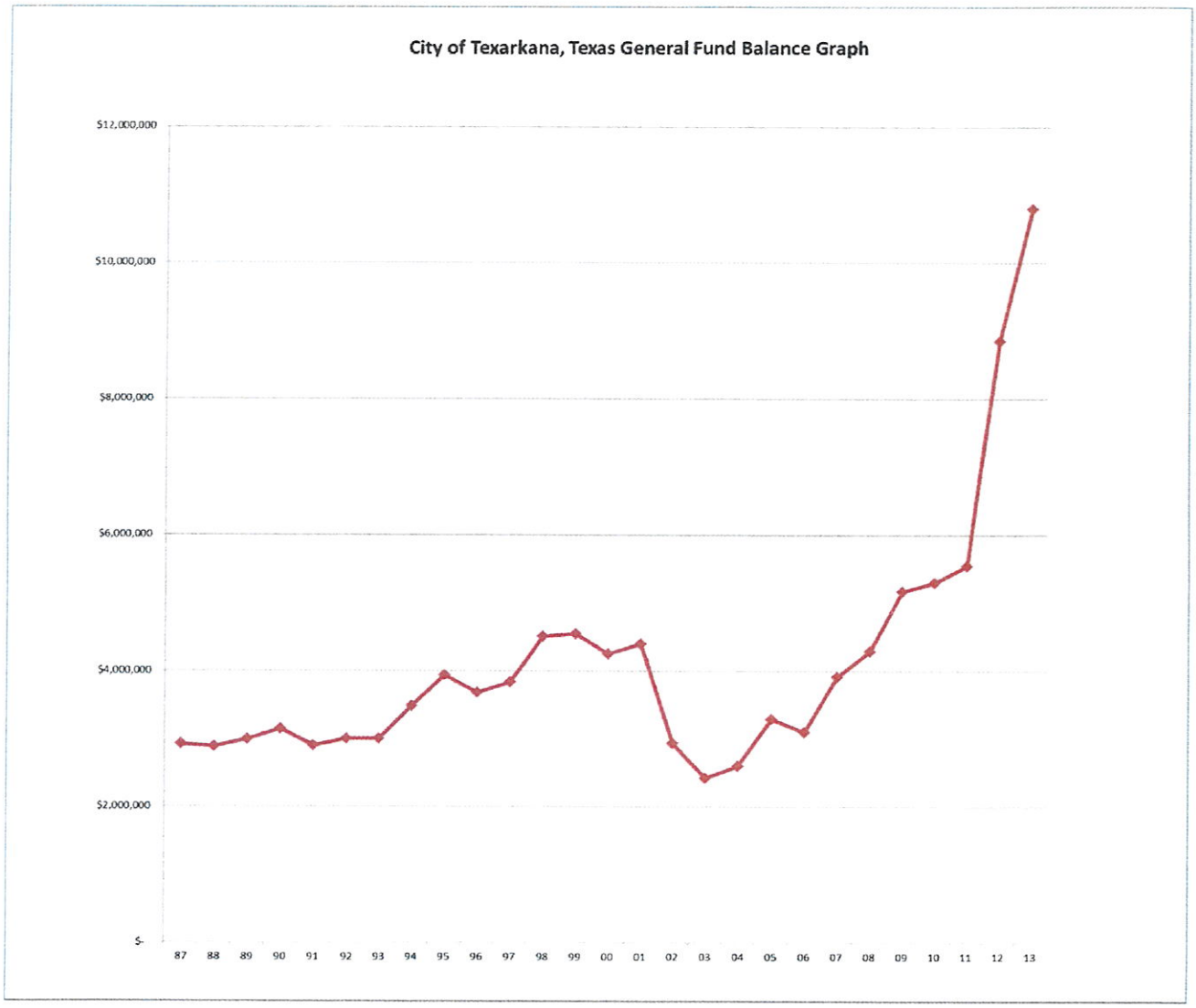

Attachment: Budget Highlights Presentation (1126 : Ordinance No. 2014-073 Budget)

DRAFT

Statement of Revenue

Description	Actual 12-13	Adopted 13-14	Revised 13-14	Proposed 14-15
Property Tax Revenue				
Current City Taxes	10,387,873	10,036,334	10,344,576	10,300,542
Delinquent City Taxes	190,779	200,000	197,103	197,103
Penalty & Interest	121,202	115,000	118,853	118,853
Property Tax Revenue	**10,699,854**	**10,351,334**	**10,660,532**	**10,616,498**
Taxes- Other				
City Sales Tax	14,326,770	14,500,000	14,620,000	14,912,000
Other Taxes	71,490	68,000	79,517	80,312
In Lieu Of Taxes	47,066	47,500	47,500	47,500
Taxes- Other	**14,445,326**	**14,615,500**	**14,747,017**	**15,039,812**
Franchise Taxes				
Electric-Sw Ark.	21,851	17,600	22,690	22,917
Electric-Bowie Cass	5,978	6,100	6,290	6,353
Electric-Swepco	826,992	850,000	855,000	863,550
Gas Franchise	272,595	269,000	320,455	323,660
Telephone Franchise	160,248	165,000	157,720	159,297
Cable Tv Franchise	350,899	338,500	370,690	374,397
Taxicab Franchise	440	450	450	450
Franchise Taxes	**1,639,003**	**1,646,650**	**1,733,295**	**1,750,624**
Fees And Permits				
Truancy Prevention Fund Fee	-	-	5,809	5,867
Building Permits	103,027	94,000	78,760	79,548
Electrical Permits	12,867	12,625	10,738	10,845
Plumbing Permits	10,067	8,100	4,848	4,896
Zoning Fees	3,330	2,910	1,646	1,662
Truancy Prevention City Fee	-	-	-	-
House Moving Permit	65	120	-	-
Permit - Row Encumbrance	100	200	-	-
St Cutting/Driveway Per	2,169	800	3,551	3,586
Wrecker Permits	650	-	-	-
Sign Permits	14,389	15,150	13,114	13,245
Garage Sale Permits	4,825	4,825	3,523	3,558
Peddler's Licenses	265	500	69	69
Electrician's Licenses	-	-	-	-
Heat/Air Cond License	1,063	540	651	658
Late Fees - ESU	-	-	-	-
Alarm Permits	44,825	41,410	39,189	39,580
Civil Justice Fee	354	400	354	357
Child Safety Seat Fee	-	-	-	-
Special Events Permits	-	-	-	-
Plans And Specs	-	-	-	-
Fees And Permits	**197,996**	**181,580**	**162,252**	**163,871**

Attachment: Budget Highlights Presentation (1126 : Ordinance No. 2014-073 Budget)

DRAFT

Statement of Revenue

Description	Actual 12-13	Adopted 13-14	Revised 13-14	Proposed 14-15
Charges For Services				
State Comp. Surcharge	161	1,000	-	-
Death Certificates	21,756	25,250	15,500	15,655
Lot Cleaning Fees	310,687	257,550	281,976	284,795
Vital Statistics	121,107	109,000	111,420	112,534
Garbage Collection Fees	5,113,630	5,200,000	5,111,699	449,726
Vital Statistics Postage/Ship	-	-	-	-
Food Permits	159,828	55,500	83,900	83,900
Swimming Pool Permits	2,100	2,400	6,000	3,000
Animal License	-	-	-	-
Amusement Devices Fees	1,730	3,030	1,500	1,500
Animal Services	-	-	-	-
Spraying Services	3,909	2,500	3,630	3,630
Charges For Services	**5,734,908**	**5,656,230**	**5,615,625**	**954,740**
Fines And Forfeitures				
Municipal Treas/Traffic	13,695	16,160	13,044	13,174
General Revenue	-	-	-	-
Cash Bonds	-	-	-	-
Child Safety Fund	3,110	4,550	1,706	1,723
Arrest Warrant/Capias	98,464	92,000	113,954	115,094
Fines & Forfeitures	695,828	806,500	726,978	734,247
Parking Meter Fines	-	-	-	-
Law Officer Ed Fund	-	-	-	-
Criminal Justice Plan Fund	-	-	-	-
Municipal Judges/Train	-	-	-	-
Comp Victims Of Crime	9,978	14,000	5,716	5,773
Special Expense & Admin	186,354	173,000	201,741	203,758
Fee-Delinquent Fines	-	-	-	-
Municipal Ct.Bldg.Secur	-	-	-	-
Time Pymt Fee(Jud Eff)	4,495	5,000	4,608	4,654
Law Enfor Stdrs & Edu	-	-	-	-
Time Pymt Fee(State)	22,488	25,250	23,066	23,296
Time Pymt Fee(No Restr)	17,991	20,200	18,452	18,637
Juv Crime & Delinquency	332	500	190	192
Fugitive Apprehen Fund	3,326	4,650	1,905	1,924
Combined Court Costs	256,312	248,877	257,026	259,596
Applied Court Bonds	74,173	-	-	-
Cor Mgmt Ins & Cjc Fund	332	450	191	192
False Alarm Fines	11,150	10,100	9,600	9,696
State Traffic Fee	132,259	117,000	127,503	128,778
Technology Fee	-	-	-	-
State Juror Fee	27,123	30,800	26,563	26,829
Judicial Salaries Fee	35,948	41,500	35,519	35,874
Indigent Defense Fee	13,273	15,150	13,109	13,240
Driver Behavior Enforce	-	-	-	-

Attachment: Budget Highlights Presentation (1126 : Ordinance No. 2014-073 Budget)

DRAFT

Statement of Revenue

Description	Actual 12-13	Adopted 13-14	Revised 13-14	Proposed 14-15
Collection Agency Fees	12,333	10,500	10,390	10,494
Fines-Commercial Vehicl	6,073	500	1,600	-
Fines And Forfeitures	**1,625,037**	**1,636,687**	**1,592,861**	**1,607,171**
Grants And Entitlements				
Contribution From State	-	-	-	-
Contri From Us Govmnt	9,433	626,770	-	598,000
Law Enforce Manage Inst	-	-	-	-
Speed Step Grant	14,083	18,796	18,400	20,640
Ojp/Police Vest Prog.	3,099	4,920	3,651	3,500
Civil Defense	22,676	150,000	80,344	100,000
Fema Disaster Relief	-	-	-	-
Fema/Fire Dept Grant	-	-	-	-
Homeland Sec/Emer Mgmt	20,638	-	42,809	32,100
Hazard Mitigation Grant	79,079	-	79,079	-
Rsvp	16,180	40,000	48,963	20,459
Contr From State CRG	-	6,501	-	-
Contribution From US Govt CRG	-	272,918	-	-
Contribution From U.S. Govt FM	-	-	-	-
Contr From U.S. Govt - SHP	-	-	-	-
Grants And Entitlements	**165,188**	**1,119,905**	**273,246**	**774,699**
Intergovernmental Revenue				
Contribution/Tutd	-	-	-	-
City Of Texarkana, Ark	21,677	33,000	16,120	16,281
Rose Hill Cemetary	5,779	10,650	1,296	1,309
Police Overtime-Schools	90,503	94,000	72,690	73,417
Police Overtime/Other	65,748	65,000	91,678	92,595
Reimb/Mpo/Tuts	15,000	18,000	17,000	18,000
PY Local Share Reimbursements	1,009	-	-	-
School Resource Officer	-	-	-	-
Foster Hm/Daycare Inspe	-	-	-	-
Intergovernmental Revenue	**199,716**	**220,650**	**198,784**	**201,602**
Contributions				
K-9 Donations	-	-	-	-
Contributions	-	-	-	-
Other				
Contribute From Others	43,760	100,000	100,105	-
Police Evidence Forfeiture	-	-	-	-
Contribution - Hatt	-	-	-	-
Parks Spec Events Don	7,519	10,000	1,500	1,500
Sale Of Surplus Propert	8,497	85,000	62,000	10,000
Recovery Damage Claims	5,849	-	20,000	5,000
Miscellaneous Income	39,752	42,700	49,300	49,793

Attachment: Budget Highlights Presentation (1126 : Ordinance No. 2014-073 Budget)

DRAFT

Statement of Revenue

Description	Actual 12-13	Adopted 13-14	Revised 13-14	Proposed 14-15
Pr Deduction Fees	749	750	750	750
Recovery Prior Yr Exp	-	-	(5,362)	-
Cash Short/Overages	78	300	(350)	-
Housing & Community Dev	-	-	-	-
Recreation League Fees	-	-	-	-
Summer Recreation Prog.	2,975	3,950	3,000	3,030
Lien Recovery / Release	1,181	1,000	1,180	1,192
W/C--Pr Reimbursement	24,122	30,000	4,970	4,970
Senior Citizens Program	-	1,000	-	-
Donations/Interest	-	-	-	-
Contrib From Citizens	-	-	-	-
Walk In Receipts	-	-	-	-
Farmer's Market Revenue	-	-	-	-
Other	**134,482**	**274,700**	**237,093**	**76,235**
Interest Income				
Interest Revenue	47,231	40,000	1,320	28,500
Dividend Revenue	3	3	5	5
Interest/Mpo	51	75	-	-
Interest/General Fund	-	-	-	-
Interest/Workmen's Comp	534	995	-	-
Bringle Lake Green Fees	6,143	2,000	1,489	1,503
Interest/Police Evidenc	86	84	60	60
Interest/Member Cities	123	225	-	-
Interest Revenue	-	-	-	-
Interest Income	**54,171**	**43,382**	**2,874**	**30,068**
Rental Income				
#12 Morris Lane Rental	9,600	9,600	10,400	9,600
Park Rent	-	-	-	-
Rental/Sw Center	3,140	3,535	2,700	2,727
Farmer's Market	-	1,950	1,950	1,500
Park Pavillon Rentals	2,155	2,100	1,217	1,229
Mobile Stage Rental	-	-	-	-
Rental Income	**14,895**	**17,185**	**16,267**	**15,056**
Transfers In				
Trf From Employee Benefit	-	-	-	-
Trf From Hotel Motel Tx	155,250	136,620	80,250	80,250
Trf From Hcd Fund	-	-	-	-
Trf From Law Enf Progrm	-	-	-	-
Trf From Law Enf Prog	-	-	-	-
Trf From Worker's Comp	-	-	-	200,000
Trf From 2008 Tax Note	-	-	-	-
Trf From Economic Dev	710,000	166,692	-	234,500
Trf From Stormwater	49,737	-	-	-

Attachment: Budget Highlights Presentation (1126 : Ordinance No. 2014-073 Budget)

DRAFT

Statement of Revenue

Description	Actual 12-13	Adopted 13-14	Revised 13-14	Proposed 14-15
Trf From Police Dog Fund	-	-	-	-
Transfer From Water Dept	1,069,178	-	-	-
Transfer From TIRZ	11,360	12,000	12,000	12,000
Trf From Police Evidence Escro	-	-	1,133	-
Transfer From Court Technology	4,791	-	-	-
Contract Svc Chg-Ipc	17,325	18,900	18,900	18,900
Expan Contr Svc Chg-Ipc	-	-	-	-
Reimb Other/Grants/Ot	5,980	3,500	5,000	5,000
Trf From 2008 Tax Note	-	-	-	-
Transfers In	**2,023,621**	**337,712**	**117,283**	**550,650**
Revenue Total	**36,934,197**	**36,101,515**	**35,357,129**	**31,781,026**

Attachment: Budget Highlights Presentation (1126 : Ordinance No. 2014-073 Budget)

DRAFT

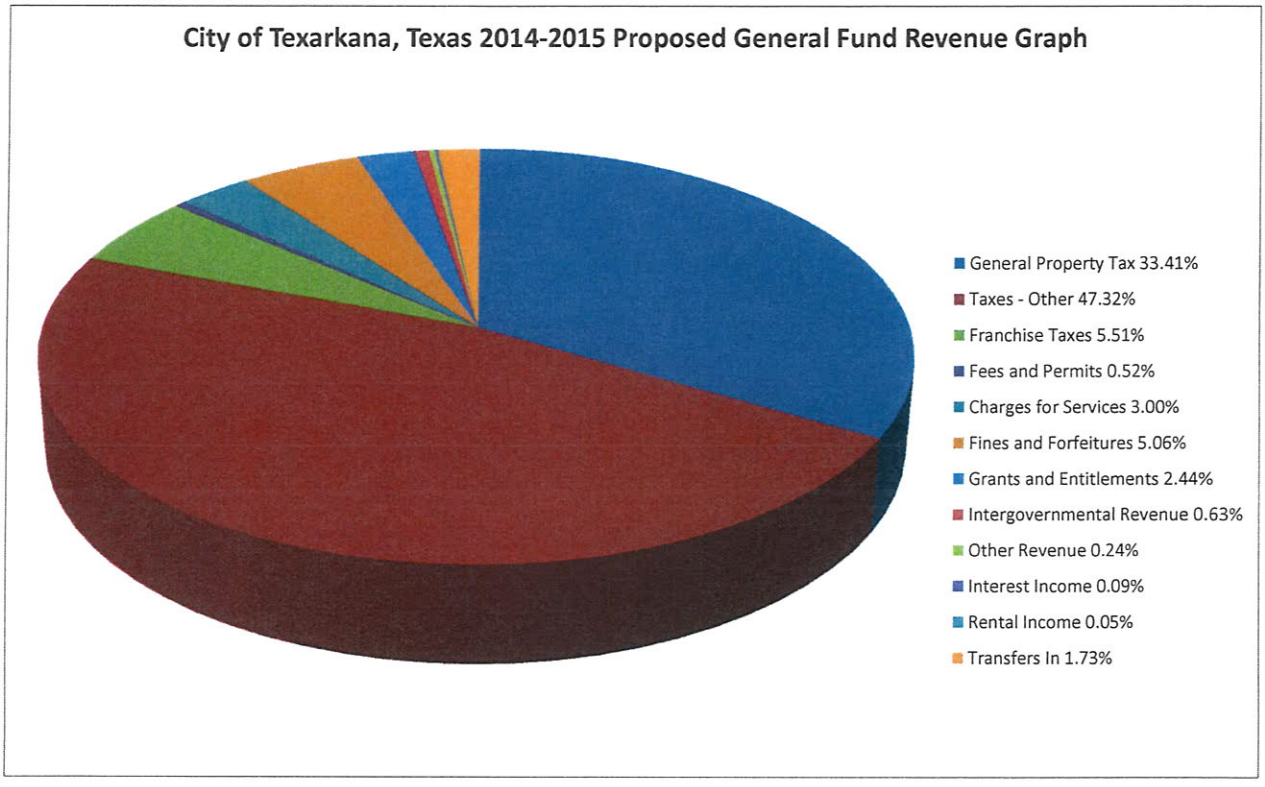

Attachment: Budget Highlights Presentation (1126 : Ordinance No. 2014-073 Budget)

DRAFT

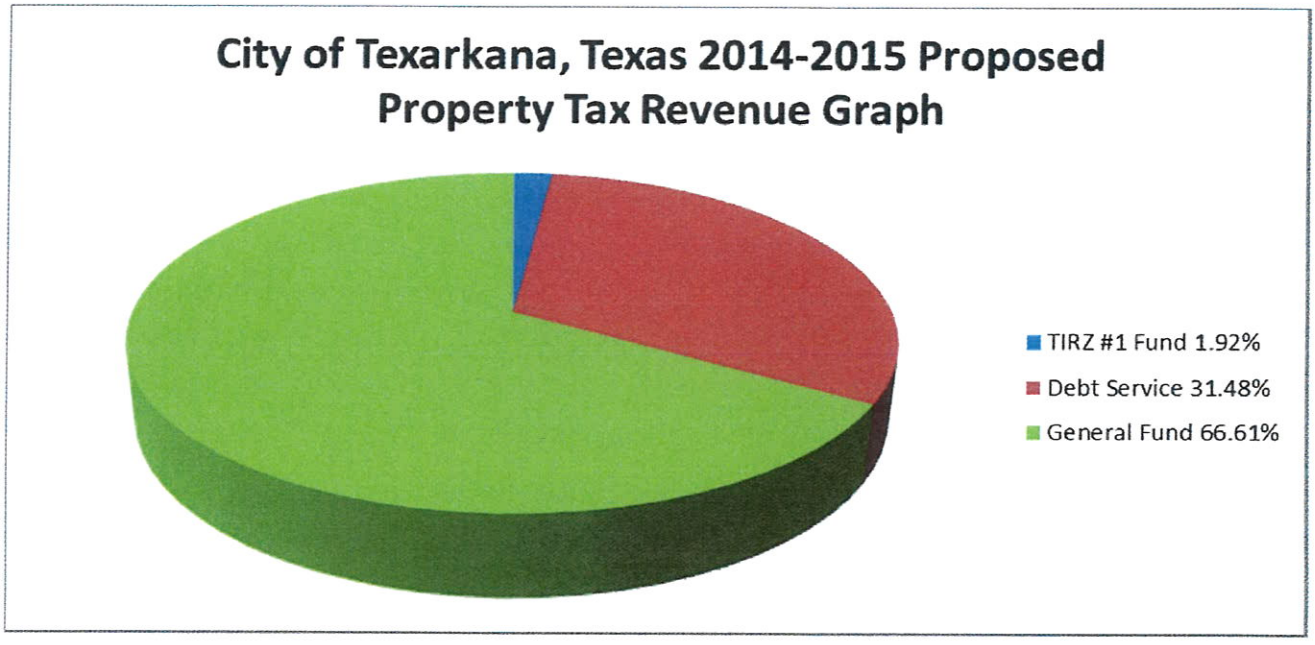

Attachment: Budget Highlights Presentation (1126 : Ordinance No. 2014-073 Budget)

DRAFT

General Fund Expenditures By Activity

Description	Actual 12-13	Adopted 13-14	Revised 13-14	Proposed 14-15
General Government				
Other	34,330	-	-	-
City Council	69,346	76,586	71,003	67,011
City Manager	184,770	202,480	200,394	868,268
Administrative Services	49,827	-	-	-
Public Information Officer	152,888	166,484	173,267	-
City Secretary	119,169	153,416	167,361	-
Human Resources	311,482	314,318	295,644	317,247
Vital Statistics	91,021	90,763	93,177	-
City Attorney	181,362	128,607	164,630	167,000
Municipal Court	919,286	616,630	603,644	631,176
Finance Administration	560,005	717,207	700,394	734,165
General Services	629,784	-	-	-
Building Maintenance	631	-	-	-
General Government	**3,303,901**	**2,466,491**	**2,469,514**	**2,784,867**
Veteran's Office				
Veterans Office	11,237	11,060	11,060	11,060
Veteran's Office	**11,237**	**11,060**	**11,060**	**11,060**
Non-Operating				
Non-Operating	5,591,115	5,606,644	5,555,146	5,391,751
Non-Operating	**5,591,115**	**5,606,644**	**5,555,146**	**5,391,751**
Refuse Services				
Refuse Services	4,616,624	4,864,000	4,666,426	-
Refuse Services	**4,616,624**	**4,864,000**	**4,666,426**	**-**
Police				
Police Administration	1,968,574	1,979,265	1,966,283	1,812,626
Patrol Division	5,005,576	4,779,248	4,856,955	5,039,605
Services Division	2,493,531	2,470,133	2,426,251	2,596,289
Criminal Investigation	16	-	-	-
Commercial Veh Enforce	17	-	-	-
Police	**9,467,714**	**9,228,646**	**9,249,489**	**9,448,520**
Fire and Emergency Management				
Fire Administration	114,567	239,912	239,912	236,326
Fire Operations	5,344,908	5,118,802	5,118,802	5,205,656
Building and Life Safety	498,649	491,286	491,286	514,017
Emergency Management	56,313	-	-	-
Homeland Security	47,064	-	-	33,000
Fire and Emergency Management	**6,061,501**	**5,850,000**	**5,850,000**	**5,988,999**
Public Works				
Engineering & Infrastructure	161,654	163,800	166,308	182,647

Attachment: Budget Highlights Presentation (1126 : Ordinance No. 2014-073 Budget)

DRAFT

General Fund Expenditures By Activity

Description	Actual 12-13	Adopted 13-14	Revised 13-14	Proposed 14-15
Engineering Design	246,136	302,716	301,167	315,582
Street Maintenance	2,274,128	2,656,106	2,649,499	2,681,480
Sign & Signal	361,237	416,453	414,389	417,248
Stormwater Management	489,710	242,751	236,835	243,453
Downtown Trans Enhance	3,782	778,774	30,000	717,500
Community & Public Works	162,502	170,062	165,261	-
Public Works	**3,699,149**	**4,730,662**	**3,963,459**	**4,557,910**
Planning and Community Development				
Community Development	429,518	317,507	356,140	510,647
Farmers Market	-	950	2,475	1,500
Planning and Community Development	**429,518**	**318,457**	**358,615**	**512,147**
Inspections and Code Enforcement				
Inspection	380,116	383,184	377,313	387,949
Environmental Services	127,629	138,642	122,969	155,426
Code Enforcement	242,225	257,370	264,964	298,985
Animal Control	239,445	311,355	289,311	267,285
Environmental Health Sv	68,343	69,154	66,960	60,982
Inspections and Code Enforcement	**1,057,758**	**1,159,705**	**1,121,517**	**1,170,627**
Parks and Recreation and Comm Health				
Building Maintenance	16,867	253,815	231,427	256,251
Parks & Rec Admin	162,735	161,418	170,025	216,300
Parks/Maintenance	1,009,538	1,066,713	1,084,858	1,035,762
Rec Programs/Activities	160,941	152,515	154,704	203,207
Senior Citizens Program	80,688	83,345	79,937	84,180
Special Events	15,372	20,975	20,808	20,975
Beverly Community Ctr	82,029	46,818	45,675	-
Sports Promotion	78,408	80,250	74,349	80,250
Parks and Recreation and Comm Health	**1,606,578**	**1,865,849**	**1,861,783**	**1,896,925**
Expense Total	**35,845,095**	**36,101,514**	**35,107,009**	**31,762,806**

Attachment: Budget Highlights Presentation (1126 : Ordinance No. 2014-073 Budget)

DRAFT

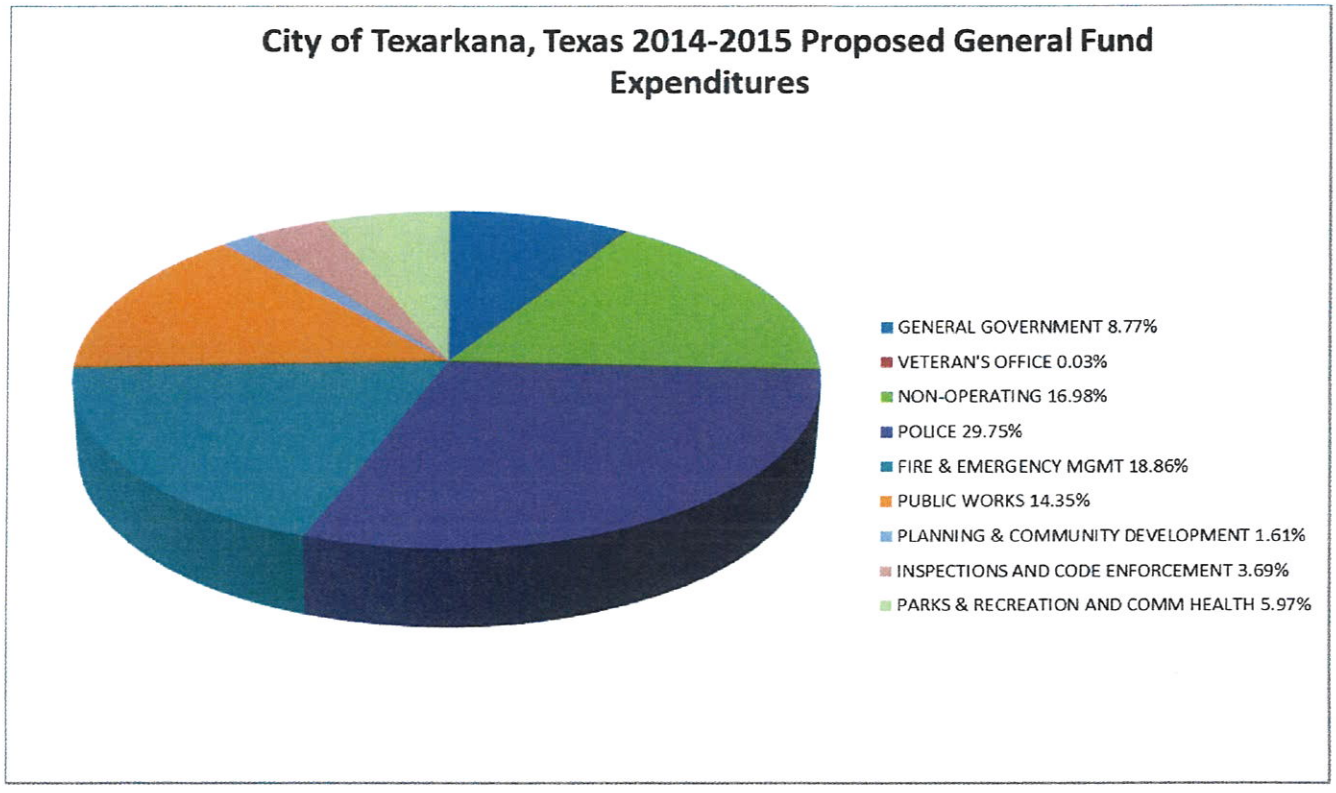

Attachment: Budget Highlights Presentation (1126 : Ordinance No. 2014-073 Budget)

DRAFT

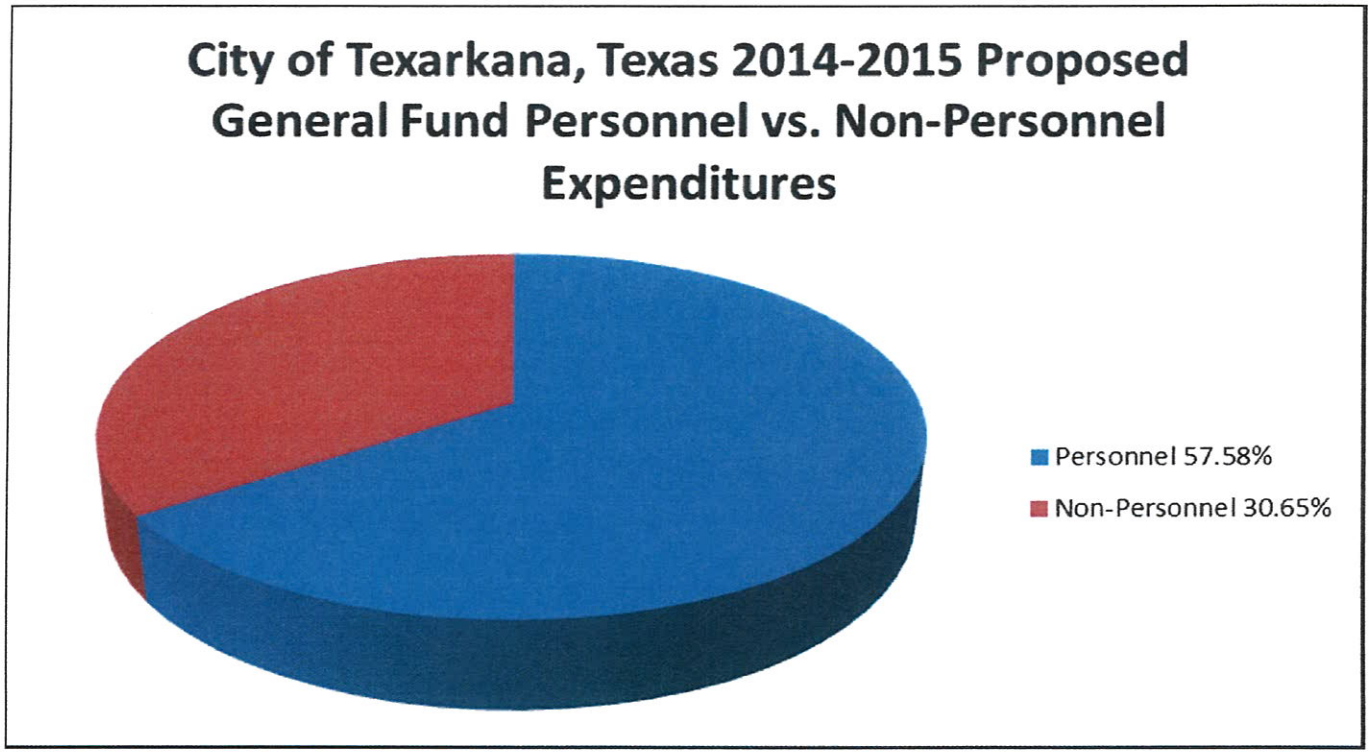

Attachment: Budget Highlights Presentation (1126 : Ordinance No. 2014-073 Budget)

DRAFT

City of Texarkana, Texas
Adjustments Made To Balance Budget
FY 09/30/2015

FY 2015 Beginning Projected Fund Balance			11,042,437
FY 2015 Projected Revenue		31,424,026	
Revenue Adjustments:			
Sales Tax Revenue Adjustment	72,000		
Transfer From Worker's Comp	200,000		
Transfer From Economic Development	85,000	357,000	
FY 2015 Adjusted Projected Revenue		31,781,026	
FY 2015 Projected Expenditures		32,237,649	
Expenditure Adjustments:			
103-Personnel Policy	(100,000)		
703-Fleet Services	(300,000)		
704-Capital Replacement	(200,000)		
Airport Budget Adjustment	39,830		
Transfer to Hotel/Motel Fund	85,327	(474,843)	
FY 2015 Adjusted Projected Expenditures		31,762,806	
Revenues Over Expenditures			18,220
FY 2015 Ending Projected Fund Balance			11,060,657

Attachment: Budget Highlights Presentation (1126 : Ordinance No. 2014-073 Budget)

DRAFT

103 Personnel Policy Fund

		Actual 12-13	Adopted 13-14	Revised 13-14	Proposed 14-15
	Fund Balance				
30000	Fund Balance	525,651	-	701,772	807,458
30108	Reserve for OPEB Trust	-	-	-	-
	Fund Balance	**525,651**	-	**701,772**	**807,458**
	Income				
40006	Employer Contribution	-	-	-	-
40031	Contribute From Others	-	-	-	-
40050	Trf From General Fund	713,461	431,461	431,461	502,000
41000	Interest Revenue	728	1,350	3,575	2,150
	Income	**714,189**	**432,811**	**435,036**	**504,150**
	Expenditures				
50006	Termination Pay	357,262	50,000	175,000	175,000
51102	Clerical	-	-	-	-
51103	Maintenance Operations	-	-	-	-
51112	Worker's Comp	8,704	5,000	4,600	5,000
51113	Pensions/Retirement	45,333	10,000	19,600	20,000
51114	Social Security	8,622	5,000	5,150	5,500
51115	Group Insurance	118,147	311,984	125,000	125,000
51134	City Contribute 401(A)	-	-	-	-
51150	OPEB Trust	-	44,086	-	-
51199	Accrued Payroll	-	-	-	-
	Expenditures	**538,068**	**426,070**	**329,350**	**330,500**
	Fund Balance	**701,772**	**6,741**	**807,458**	**981,108**

Attachment: Budget Highlights Presentation (1126 : Ordinance No. 2014-073 Budget)

DRAFT

104 Workers Compensation Fund

		Actual 12-13	Adopted 13-14	Revised 13-14	Proposed 14-15
	Fund Balance				
30000	Fund Balance	310,704	402,204	394,566	476,596
	Fund Balance	**310,704**	**402,204**	**394,566**	**476,596**
	Income				
40006	Employer Contribution	399,388	417,000	393,000	393,000
40029	Refund Of Contributions	-	-	-	-
41000	Interest Revenue	-	-	2,130	1,300
41002	Dividend Revenue	-	-	-	-
46088	Miscellaneous Income	-	-	-	-
	Income	**399,388**	**417,000**	**395,130**	**394,300**
	Expenditures				
50009	Trf To General Fund	-	-	-	200,000
54503	Insurance & Bond	315,526	314,265	313,100	344,500
54523	Bank Service Charges	-	-	-	-
	Expenditures	**315,526**	**314,265**	**313,100**	**544,500**
	Fund Balance	**394,566**	**504,939**	**476,596**	**326,396**

Attachment: Budget Highlights Presentation (1126 : Ordinance No. 2014-073 Budget)

DRAFT

116 TIRZ Fund

		Actual 12-13	Adopted 13-14	Revised 13-14	Proposed 14-15
	Fund Balance				
30000	Fund Balance	11,864	99,307	103,963	250,558
	Fund Balance	**11,864**	**99,307**	**103,963**	**250,558**
	Income				
40031	Contribute From Others	77,170	236,150	77,000	78,500
41000	Interest Revenue	423	450	750	800
46001	Current City Taxes	185,254	433,026	289,883	296,295
	Income	**262,847**	**669,626**	**367,633**	**375,595**
	Expenditures				
50009	Trf To General Fund	11,360	12,000	12,000	12,000
50052	Trf To I & S	159,263	208,837	208,838	252,450
52204	Food Supplies	125	400	200	300
	Expenditures	**170,748**	**221,237**	**221,038**	**264,750**
	Fund Balance	**103,963**	**547,696**	**250,558**	**361,403**

Attachment: Budget Highlights Presentation (1126 : Ordinance No. 2014-073 Budget)

DRAFT

211 Perot Theatre Operations Fund

		Actual 12-13	Adopted 13-14	Revised 13-14	Proposed 14-15
	Fund Balance				
30000	Fund Balance	74,965	77,287	77,691	54,870
	Fund Balance	**74,965**	**77,287**	**77,691**	**54,870**
	Income				
40015	Trf From Hotel Motel Tx	305,000	268,400	268,400	268,400
41000	Interest Revenue	155	300	540	375
46086	Recovery Damage Claims	3,611	-	-	-
46239	Perot Theatre Rental	32,491	29,967	32,000	32,000
46243	Merchandise Revenue	-	735	-	-
46244	Ticketing Revenue	-	3,000	-	-
46248	Digital Advertising	-	1,000	-	-
	Income	**341,257**	**303,402**	**300,940**	**300,775**
	Expenditures				
50017	Trf To Building Maint	50,000	50,000	40,000	40,000
50069	Trf to Technology Fund	1,861	1,861	1,861	1,256
54502	Rental	10,665	2,967	4,800	5,000
54503	Insurance & Bond	4,154	3,978	3,978	4,375
54504	Special Services	271,207	272,397	272,397	272,397
54524	Other Services	644	1,000	725	750
	Expenditures	**338,531**	**332,203**	**323,761**	**323,778**
	Fund Balance	**77,691**	**48,486**	**54,870**	**31,867**

Attachment: Budget Highlights Presentation (1126 : Ordinance No. 2014-073 Budget)

DRAFT

213 Perot Theatre Building Maintenance

		Actual 12-13	Adopted 13-14	Revised 13-14	Proposed 14-15
	Fund Balance				
30000	Fund Balance	698,824	668,023	681,271	558,721
	Fund Balance	**698,824**	**668,023**	**681,271**	**558,721**
	Income				
40052	Trf From Theatre Fund	50,000	50,000	40,000	40,000
41000	Interest Revenue	2,039	2,200	2,750	2,500
41002	Dividend Revenue	-	-	-	-
46135	Theatre Enhancement Fee	57,714	58,000	50,000	50,000
	Income	**109,753**	**110,200**	**92,750**	**92,500**
	Expenditures				
53301	Buildings	66,705	174,930	7,500	10,000
53302	Improvement-Enhanc Fees	711	39,800	39,800	50,000
55801	Building & Facilities	59,890	-	168,000	60,000
	Expenditures	**127,306**	**214,730**	**215,300**	**120,000**
	Fund Balance	**681,271**	**563,493**	**558,721**	**531,221**

Attachment: Budget Highlights Presentation (1126 : Ordinance No. 2014-073 Budget)

DRAFT

212 Hotel Occupancy Tax Fund

		Actual 12-13	Adopted 13-14	Revised 13-14	Proposed 14-15
	Fund Balance				
30000	Fund Balance	1,205,482	170,623	213,627	55,976
30012	Resv - Convention Ctr	-	-	-	-
	Fund Balance	**1,205,482**	**170,623**	**213,627**	**55,976**
	Income				
40001	Contribution From State	-	-	-	-
40031	Contribute From Others	-	-	-	-
40050	Trf From General Fund	364,240	-	-	85,327
40091	Trf Fr Hotel Motel	-	-	-	-
41000	Interest Revenue	1,251	2,400	1,600	751
41002	Dividend Revenue	-	-	-	-
46084	Sale Of Surplus Propert	-	-	-	-
46092	Cash Short/Overages	-	-	-	-
46237	Convention Ctr.Revenue	449,116	424,000	348,000	348,000
46238	Hotel/Motel Taxes	769,406	727,000	870,000	870,000
	Income	**1,584,013**	**1,153,400**	**1,219,600**	**1,304,078**
	Expenditures				
50009	Trf To General Fund	155,250	136,620	80,250	80,250
50033	Trf To Theatre Fund	305,000	268,400	268,400	268,400
50052	Trf To I & S	562,043	493,808	493,808	493,808
50054	Trf To Conv Ctr	-	-	(28)	-
50064	Trf to Conv Ctr Bond	1,056,052	-	-	-
51101	Supervision	60,000	61,600	61,600	52,800
51103	Maintenance Operations	41,800	41,184	41,184	41,184
53301	Buildings	42,230	39,600	39,600	39,600
54502	Rental	-	-	-	-
54504	Special Services	500	15,000	15,000	15,000
54518	Conv Ctr Management	173,073	125,000	235,000	235,000
54520	Miscellaneous Expense	-	-	-	-
54523	Bank Service Charges	-	75	75	75
54525	Advertising	179,920	137,204	137,205	128,405
54541	Administrative Fees	-	-	(375)	-
54648	Downtown Enhancement	-	-	-	-
54650	Chamber of Commerce	-	-	-	-
54651	T.R.A.H.C.	-	-	-	-
54652	Historical Museum	-	-	-	-
54654	Four States Fair	-	-	-	-
54667	Leadership Texarkana	-	-	-	-
54673	TC Rising Star Open	-	-	-	-
54675	Sports Promotion	-	-	-	-
54678	Txk Symphony Orchestra	-	-	-	-
54680	Convention Ctr Promotio	-	-	-	-
54681	Arts & Historic District	-	5,532	5,532	5,532
55801	Building & Facilities	-	-	-	-

Attachment: Budget Highlights Presentation (1126 : Ordinance No. 2014-073 Budget)

DRAFT

212 Hotel Occupancy Tax Fund

		Actual 12-13	Adopted 13-14	Revised 13-14	Proposed 14-15
57039	Conv Ctr Construction	-	-	-	-
	Expenditures	2,575,868	1,324,023	1,377,251	1,360,054
	Fund Balance	213,627	-	55,976	-

Attachment: Budget Highlights Presentation (1126 : Ordinance No. 2014-073 Budget)

DRAFT

Four States Fair and Rodeo 21.50

		Actual 12-13	Adopted 13-14	Revised 13-14	Proposed 14-15
	Personnel Services				
51101	Supervision	-	8,800	8,800	-
	Personnel Services	**-**	**8,800**	**8,800**	**-**
	Maintenance				
53301	Buildings	-	-	-	-
	Maintenance	**-**	**-**	**-**	**-**
	Contractual Services				
54525	Advertising	20,000	8,800	8,800	-
	Contractual Services	**20,000**	**8,800**	**8,800**	**-**
	Capital Outlay				
55801	Building & Facilities	-	-	-	-
	Capital Outlay	**-**	**-**	**-**	**-**
	Grand Total	**20,000**	**17,600**	**17,600**	**-**

Attachment: Budget Highlights Presentation (1126 : Ordinance No. 2014-073 Budget)

DRAFT

Main Street Texarkana 21.51

		Actual 12-13	Adopted 13-14	Revised 13-14	Proposed 14-15
	Personnel Services				
51101	Supervision	15,000	13,200	13,200	13,200
	Personnel Services	**15,000**	**13,200**	**13,200**	**13,200**
	Contractual Services				
54525	Advertising	15,000	12,408	12,408	12,408
	Contractual Services	**15,000**	**12,408**	**12,408**	**12,408**
	Grand Total	**30,000**	**25,608**	**25,608**	**25,608**

Attachment: Budget Highlights Presentation (1126 : Ordinance No. 2014-073 Budget)

DRAFT

Texarkana Museums System 21.53

		Actual 12-13	Adopted 13-14	Revised 13-14	Proposed 14-15
	Personnel Services				
51101	Supervision	15,000	13,200	13,200	13,200
51103	Maintenance Operations	25,800	22,704	22,704	22,704
	Personnel Services	**40,800**	**35,904**	**35,904**	**35,904**
	Maintenance				
53301	Buildings	37,230	35,200	35,200	35,200
	Maintenance	**37,230**	**35,200**	**35,200**	**35,200**
	Contractual Services				
54525	Advertising	48,200	39,113	39,113	39,113
	Contractual Services	**48,200**	**39,113**	**39,113**	**39,113**
	Grand Total	**126,230**	**110,217**	**110,217**	**110,217**

Attachment: Budget Highlights Presentation (1126 : Ordinance No. 2014-073 Budget)

DRAFT

TRAHC 21.54

		Actual 12-13	Adopted 13-14	Revised 13-14	Proposed 14-15
	Personnel Services				
51101	Supervision	15,000	13,200	13,200	13,200
51103	Maintenance Operations	16,000	14,080	14,080	14,080
	Personnel Services	**31,000**	**27,280**	**27,280**	**27,280**
	Maintenance				
53301	Buildings	5,000	4,400	4,400	4,400
	Maintenance	**5,000**	**4,400**	**4,400**	**4,400**
	Contractual Services				
54502	Rental	-	-	-	-
54504	Special Services	-	-	-	-
54525	Advertising	44,000	38,180	38,180	38,180
	Contractual Services	**44,000**	**38,180**	**38,180**	**38,180**
	Grand Total	**80,000**	**69,860**	**69,860**	**69,860**

Attachment: Budget Highlights Presentation (1126 : Ordinance No. 2014-073 Budget)

DRAFT

Texarkana Symphony Orchestra 21.55

		Actual 12-13	Adopted 13-14	Revised 13-14	Proposed 14-15
	Personnel Services				
51101	Supervision	15,000	13,200	13,200	13,200
51103	Maintenance Operations	-	4,400	4,400	4,400
	Personnel Services	**15,000**	**17,600**	**17,600**	**17,600**
	Contractual Services				
54525	Advertising	20,000	12,304	12,304	12,304
	Contractual Services	**20,000**	**12,304**	**12,304**	**12,304**
	Grand Total	**35,000**	**29,904**	**29,904**	**29,904**

Attachment: Budget Highlights Presentation (1126 : Ordinance No. 2014-073 Budget)

DRAFT

Texarkana Chamber of Commerce 21.56

		Actual 12-13	Adopted 13-14	Revised 13-14	Proposed 14-15
	Contractual Services				
54525	Advertising	30,000	26,400	26,400	26,400
	Contractual Services	**30,000**	**26,400**	**26,400**	**26,400**
	Grand Total	**30,000**	**26,400**	**26,400**	**26,400**

Attachment: Budget Highlights Presentation (1126 : Ordinance No. 2014-073 Budget)

DRAFT

Hotel Motel 22.07

		Actual 12-13	Adopted 13-14	Revised 13-14	Proposed 14-15
	Transfers				
50009	Trf To General Fund	155,250	136,620	80,250	80,250
50033	Trf To Theatre Fund	305,000	268,400	268,400	268,400
50052	Trf To I & S	-	493,808	493,808	493,808
	Transfers	**460,250**	**898,828**	**842,458**	**842,458**
	Contractual Services				
54504	Special Services	500	15,000	15,000	15,000
54523	Bank Service Charges	-	75	75	75
54525	Advertising	2,720	-	-	-
54541	Administrative Fees	-	-	(375)	-
54681	Arts & Historic District	-	5,532	5,532	5,532
	Contractual Services	**3,220**	**20,607**	**20,232**	**20,607**
	Capital Outlay				
55801	Building & Facilities	-	-	-	-
57039	Conv Ctr Construction	-	-	-	-
	Capital Outlay	-	-	-	-
	Grand Total	**463,470**	**919,435**	**862,690**	**863,065**

Attachment: Budget Highlights Presentation (1126 : Ordinance No. 2014-073 Budget)

DRAFT

Convention Center 22.12

		Actual 12-13	Adopted 13-14	Revised 13-14	Proposed 14-15
	Transfers				
50054	Trf To Conv Ctr	-	-	(28)	-
	Transfers	-	-	**(28)**	-
	Contractual Services				
54518	Conv Ctr Management	173,073	125,000	235,000	235,000
	Contractual Services	**173,073**	**125,000**	**235,000**	**235,000**
	Grand Total	**173,073**	**125,000**	**234,972**	**235,000**

Attachment: Budget Highlights Presentation (1126 : Ordinance No. 2014-073 Budget)

DRAFT

223 Economic Development Fund

		Actual 12-13	Adopted 13-14	Revised 13-14	Proposed 14-15
	Fund Balance				
30000	Fund Balance	1,626,538	996,183	1,049,317	1,056,592
30106	Reserve for Military Affairs	75,000	75,000	100,000	100,000
	Fund Balance	**1,701,538**	**1,071,183**	**1,149,317**	**1,156,592**
	Income				
40031	Contribute From Others	-	1,000	-	-
41000	Interest Revenue	4,042	8,500	5,475	4,200
41002	Dividend Revenue	-	-	-	-
46011	Electric-Swepco	275,821	261,000	281,000	295,000
46012	Gas Franchise	90,865	91,000	100,000	105,000
46088	Miscellaneous Income	-	-	-	-
	Income	**370,728**	**361,500**	**386,475**	**404,200**
	Expenditures				
50009	Trf To General Fund	710,000	166,692	-	234,500
50069	Trf to Technology Fund	-	171	171	328
52201	Office Supplies	-	100	100	100
52205	Postage/Shipping	-	100	100	100
52213	Computer Supplies	882	-	-	-
54500	Communications-In House	60	144	144	132
54501	Communications-Cellular	98	60	60	60
54504	Special Services	102,860	118,000	118,000	118,000
54506	Travel	6,037	9,000	9,000	11,000
54519	Meals/Local Expense	1,142	3,000	3,000	2,750
54524	Other Services	-	500	500	459
54525	Advertising	-	-	-	-
54529	Trade Shows	8,525	10,000	10,000	15,000
54608	Dues And Memberships	(722)	1,500	1,500	1,500
54609	Other Sundry Items	-	1,625	1,625	1,650
54679	Econ Incentive Payments	89,948	100,000	100,000	100,000
54682	Coopertire Training Inc	-	10,000	10,000	-
54683	Military Affairs	-	25,000	25,000	25,000
54684	Humco Skills Development	-	-	-	-
54685	Matching TAMUT	4,119	-	-	-
54686	Grant/Loan Matching Funds	-	100,000	100,000	50,000
55702	Major Tools & Equipment	-	-	-	-
55813	Land Acquisition	-	-	-	-
	Expenditures	**922,949**	**545,892**	**379,200**	**560,579**
	Fund Balance	**1,149,317**	**886,791**	**1,156,592**	**1,000,213**

Attachment: Budget Highlights Presentation (1126 : Ordinance No. 2014-073 Budget)

DRAFT

301 Debt Service Fund

		Actual 12-13	Adopted 13-14	Revised 13-14	Proposed 14-15
	Fund Balance				
30000	Fund Balance	318,395	8,191	(104,605)	4,725
	Fund Balance	**318,395**	**8,191**	**(104,605)**	**4,725**
	Income				
40022	Proceeds From Go Bonds	14,550,000	-	-	-
40062	Bond Premium	1,270,367	-	-	-
40082	Bi-State CO Payment	-	211,671	211,671	211,090
41000	Interest Revenue	3,562	4,000	3,225	3,500
41001	Accrued Interest	32,500	-	-	-
41032	Transfer From Convention Ctr	562,043	493,808	493,808	493,808
41035	Trf Fr TIRZ District	159,263	208,838	208,838	252,450
41036	Trf Fr 1998 Bond Fund	3	-	-	-
46001	Current City Taxes	4,731,849	4,915,538	4,993,646	4,868,022
46002	Delinquent City Taxes	87,339	100,000	97,533	97,533
46003	Penalty & Interest	58,296	54,689	67,160	68,000
46092	Cash Short/Overages	-	-	-	-
	Income	**21,455,222**	**5,988,544**	**6,075,881**	**5,994,403**
	Expenditures				
50005	Bonds Redeemed	3,720,000	3,860,000	3,860,000	3,750,000
50012	Bond Interest Expense	2,174,451	2,103,051	2,103,051	1,988,883
50019	Agent Fees	2,754	4,000	3,500	4,000
56918	Issuance Expense	193,000	-	-	-
56919	Heritage Manor Drainage	15,788,017	-	-	-
	Expenditures	**21,878,222**	**5,967,051**	**5,966,551**	**5,742,883**
	Fund Balance	**(104,605)**	**29,684**	**4,725**	**256,245**

Attachment: Budget Highlights Presentation (1126 : Ordinance No. 2014-073 Budget)

DRAFT

SUMMARY OF OUTSTANDING DEBT

Date	*Principal*	*Interest*	*Debt Service*	*Balance of Principal Outstanding*
				$ 52,540,000
9/30/2015	$ 3,750,000	$ 1,988,883	$ 5,738,883	$ 48,790,000
9/30/2016	$ 3,630,000	$ 1,877,416	$ 5,507,416	$ 45,160,000
9/30/2017	$ 3,580,000	$ 1,762,067	$ 5,342,067	$ 41,580,000
9/30/2018	$ 3,715,000	$ 1,637,441	$ 5,352,441	$ 37,865,000
9/30/2019	$ 3,650,000	$ 1,509,820	$ 5,159,820	$ 34,215,000
9/30/2020	$ 3,810,000	$ 1,370,724	$ 5,180,724	$ 30,405,000
9/30/2021	$ 3,690,000	$ 1,212,584	$ 4,902,584	$ 26,715,000
9/30/2022	$ 3,910,000	$ 1,041,306	$ 4,951,306	$ 22,805,000
9/30/2023	$ 3,890,000	$ 863,490	$ 4,753,490	$ 18,915,000
9/30/2024	$ 2,795,000	$ 710,940	$ 3,505,940	$ 16,120,000
9/30/2025	$ 2,930,000	$ 594,679	$ 3,524,679	$ 13,190,000
9/30/2026	$ 3,060,000	$ 483,787	$ 3,543,787	$ 10,130,000
9/30/2027	$ 3,195,000	$ 364,680	$ 3,559,680	$ 6,935,000
9/30/2028	$ 1,835,000	$ 262,040	$ 2,097,040	$ 5,100,000
9/30/2029	$ 1,920,000	$ 176,637	$ 2,096,637	$ 3,180,000
9/30/2030	$ 2,010,000	$ 86,063	$ 2,096,063	$ 1,170,000
9/30/2031	$ 220,000	$ 36,125	$ 256,125	$ 950,000
9/30/2032	$ 225,000	$ 29,031	$ 254,031	$ 725,000
9/30/2033	$ 235,000	$ 21,263	$ 256,263	$ 490,000
9/30/2034	$ 240,000	$ 12,950	$ 252,950	$ 250,000
9/30/2035	$ 250,000	$ 4,375	$ 254,375	$ -
9/30/2036	$ -	$ -	$ -	
TOTALS	**$ 52,540,000**	**$ 16,046,299**	**$ 68,586,299**	**$ -**

Attachment: Budget Highlights Presentation (1126 : Ordinance No. 2014-073 Budget)

DRAFT

701 and 702 Employee Benefits Fund

		Actual 12-13	Adopted 13-14	Revised 13-14	Proposed 14-15
	Fund Balance				
30000	Fund Balance	1,359,338	2,024,698	1,538,896	1,480,276
	Fund Balance	**1,359,338**	**2,024,698**	**1,538,896**	**1,480,276**
	Income				
40006	Employer Contribution	2,614,153	2,400,000	2,594,000	2,999,669
40007	Employee Contributions	954,246	905,000	905,000	1,046,721
40008	Trf From Emp Bene Trust	4,763,277	-	-	-
40018	Water Co Contribution	1,382,457	990,000	1,441,000	1,666,483
40020	Perot Theatre Contribut	102,779	87,000	87,500	100,962
40023	Airport Auth Contributi	75,206	58,000	69,000	79,675
40025	Employee Contrib/Flex	-	400	-	-
40027	Empl Cont/Flex/Water Co	-	325,000	-	-
40029	Refund Of Contributions	88,727	40,000	75,000	86,973
40030	Cobra Premiums	20,798	20,000	29,500	34,060
40035	Msfcu Contribution	11,122	9,500	11,700	13,381
40040	Stop Loss Reimbursements	-	-	28,080	32,235
40080	Txk Symphony Contributi	10,263	12,000	11,000	12,772
41000	Interest Revenue	3,086	4,500	8,100	9,123
	Income	**10,026,114**	**4,851,400**	**5,259,880**	**6,082,054**
	Expenditures				
50001	Expend/Employee Claims	3,433,310	2,650,000	3,830,000	3,941,995
50007	Trf To Benefit Payment	4,763,276	-	-	-
50008	Expend/Empl Claims/Flex	646,303	591,000	591,000	-
50014	Expenditures/Group Life	221,191	490,068	189,000	625,118
50031	Stop Loss/Admin Costs	670,482	578,932	594,500	794,496
50034	HRA Funding	-	-	-	623,400
50058	Vision Premiums	64,553	66,000	62,000	45,045
51151	Extended Sick Leave	-	50,000	-	-
54504	Special Services	47,000	52,000	52,000	52,000
54521	Excise Fees	371	-	-	-
54523	Bank Service Charges	70	100	-	-
	Expenditures	**9,846,556**	**4,478,100**	**5,318,500**	**6,082,054**
	Fund Balance	**1,538,896**	**2,397,998**	**1,480,276**	**1,480,276**

Attachment: Budget Highlights Presentation (1126 : Ordinance No. 2014-073 Budget)

DRAFT

703 Fleet Services Fund

		Actual 12-13	Adopted 13-14	Revised 13-14	Proposed 14-15
	Fund Balance				
30000	Fund Balance	132,730	160,664	268,447	397,312
30900	Net Invested/Cap Assets	185,965	-	-	-
	Fund Balance	**318,695**	**160,664**	**268,447**	**397,312**
	Income				
40036	City Contribution	27,350	-	-	-
40050	Trf From General Fund	1,236,979	1,412,500	1,412,500	1,112,500
40055	Transfer Fr Capital Repl	10,000	5,000	5,000	5,000
40074	Contribution-Tutd-Fuel	43,241	-	263,500	266,000
40075	Contribution From TWU	551	2,500	425	450
40078	Contribute-Library-Fuel	693	550	385	390
40079	Contribute-Library-Mant	67	30	600	605
41000	Interest Revenue	71	130	545	325
46062	City Of Texarkana, Ark	-	-	121	-
46086	Recovery Damage Claims	4,155	5,000	12,000	10,000
46088	Miscellaneous Income	1,494	-	500	500
46090	Recovery Prior Yr Exp	-	-	-	-
	Income	**1,324,601**	**1,425,710**	**1,695,576**	**1,395,770**
	Expenditures				
50069	Trf to Technology Fund	1,664	1,664	1,664	1,777
50501	Depreciation Expense	19,982	-	-	-
51101	Supervision	108,541	112,610	112,610	66,464
51103	Maintenance Operations	134,648	143,359	143,359	182,606
51105	Overtime	8,867	8,332	8,332	8,023
51106	Longevity Pay	2,976	3,264	3,264	3,600
51107	Incentive Pay	2,165	2,165	2,165	2,165
51109	Standby Pay	6,927	7,180	7,180	-
51112	Worker's Comp	3,691	3,771	3,771	5,310
51113	Pensions/Retirement	42,328	43,391	43,391	41,532
51114	Social Security	19,907	19,934	19,934	20,109
51115	Group Insurance	38,073	39,390	39,390	48,685
51120	Auto Allowance	3,000	3,000	3,000	3,000
51122	Tool Allowance	1,600	1,600	1,600	1,600
51199	Accrued Payroll	1,204	-	-	-
52201	Office Supplies	935	1,300	1,300	1,300
52202	Wearing Apparel	1,682	3,000	3,000	3,000
52204	Food Supplies	270	250	250	250
52205	Postage/Shipping	-	50	50	50
52206	Fuels And Lubricants	636,902	798,563	798,563	760,000
52207	Minor Tools And Equip	8,629	15,355	15,355	15,355
52208	Janitorial Supplies	1,449	2,500	2,500	2,500
52209	Chemical Supplies	1,004	1,500	1,500	1,500
52213	Computer Supplies	5,050	-	-	-
52220	Safety Related Supplies	13	600	600	600

Attachment: Budget Highlights Presentation (1126 : Ordinance No. 2014-073 Budget)

DRAFT

703 Fleet Services Fund

		Actual 12-13	Adopted 13-14	Revised 13-14	Proposed 14-15
53301	Buildings	8,978	9,965	9,965	7,000
53400	Computer Hard &Software	156	5,100	5,100	5,100
53403	Motor Vehicles-Dept.Use	-	3,291	3,291	-
53404	Motor Vehicles-Fleet	294,891	305,464	305,464	310,000
53405	Security & Surveillance	-	1,500	1,500	1,500
54500	Communications-In House	1,126	1,400	1,400	1,200
54501	Communications-Cellular	1,386	2,200	2,200	1,500
54502	Rental	828	1,200	1,200	600
54503	Insurance & Bond	4,317	4,800	4,800	4,800
54504	Special Services	868	300	300	300
54506	Travel	524	5,000	5,000	5,000
54507	Utilties-Electricity	5,226	5,900	5,900	5,900
54508	Utilities-Water & Sewer	2,369	2,150	2,150	2,150
54509	Utilities-Gas	2,126	4,850	4,850	4,850
54525	Advertising	-	-	813	900
54608	Dues And Memberships	547	813	-	-
	Expenditures	**1,374,849**	**1,566,711**	**1,566,711**	**1,520,226**
	Fund Balance	**268,447**	**19,663**	**397,312**	**272,856**

Attachment: Budget Highlights Presentation (1126 : Ordinance No. 2014-073 Budget)

DRAFT

704 Capital Replacement Fund

		Actual 12-13	Adopted 13-14	Revised 13-14	Proposed 14-15
	Fund Balance				
30000	Fund Balance	791,784	846,887	848,537	269,067
	Fund Balance	**791,784**	**846,887**	**848,537**	**269,067**
	Income				
40050	Trf From General Fund	800,000	1,200,000	1,200,000	1,000,000
41000	Interest Revenue	1,537	2,800	2,000	245
46084	Sale Of Surplus Propert	52,043	15,000	49,677	35,000
46086	Recovery Damage Claims	-	-	-	-
46704	Trf from 2008 Tax Note	-	-	-	-
	Income	**853,580**	**1,217,800**	**1,251,677**	**1,035,245**
	Expenditures				
50059	Trf To Fleet	10,000	5,000	5,000	5,000
55704	Motor Vehicles	786,827	1,776,588	1,765,507	1,294,930
55706	Heavy Equipment	-	60,640	60,640	-
	Expenditures	**796,827**	**1,842,228**	**1,831,147**	**1,299,930**
	Fund Balance	**848,537**	**222,459**	**269,067**	**4,382**

Attachment: Budget Highlights Presentation (1126 : Ordinance No. 2014-073 Budget)

DRAFT

City of Texarkana, Texas
Analysis of Property Tax Revenues

	Actual 2012-13	Adopted 2013-14	Revised 2013-14	Proposed 2014-15
Valuation				
General Fund	1,686,000,980	1,624,941,660	1,624,941,660	1,579,614,466
TIRZ 1	30,067,601	66,665,688	66,665,688	45,437,526
TIRZ 2	-	-	-	-
Debt Service Fund	768,001,501	756,761,859	756,761,859	746,523,609
Total Valuation	2,484,070,082	2,448,369,207	2,448,369,207	2,371,575,601
Property Tax Revenues				
Levy to General Fund	10,280,076	10,341,406	10,664,511	10,572,249
Levy to TIRZ#1	173,155	446,189	298,848	304,110
Levy to TIRZ#2	-	-	-	-
Debt Service Fund	5,146,278	5,064,954	5,148,088	4,996,430
Deduct Delinquencies	294,533	467,651	483,342	407,931
Total Current Collections	15,304,976	15,384,898	15,628,104	15,464,859
Total Delinquent Collections	278,118	300,000	294,636	294,636
Total of Collections	15,583,094	15,684,898	15,922,740	15,759,495
Tax Rate Distributions				
General Fund	0.454266	0.436613	0.443019	0.445789
TIRZ #1	0.008101	0.018838	0.012415	0.012823
Debt Service	0.206926	0.213842	0.213859	0.210680
Total of Tax Rates	0.669293	0.669293	0.669293	0.669293
Fund Distribution				
Current Tax:				
General Fund	10,387,873	10,036,334	10,344,576	10,300,542
TIRZ #1	185,254	433,026	289,883	296,295
Debt Service	4,731,849	4,915,538	4,993,646	4,868,022
Total Current Tax	15,304,976	15,384,898	15,628,104	15,464,859
Delinquent Tax:				
General Fund	190,779	200,000	197,103	197,103
TIRZ #1	-	-	-	-
Debt Service	87,339	100,000	97,533	97,533
Total Delinquent Tax	278,118	300,000	294,636	294,636
Percentage Distribution:				
General Fund	0.6787	0.6524	0.6620	0.6661
TIRZ #1	0.0121	0.0281	0.0185	0.0192
Debt Service	0.3092	0.3195	0.3195	0.3148
Total Distribution	1.0000	1.0000	1.0000	1.0000

Attachment: Budget Highlights Presentation (1126 : Ordinance No. 2014-073 Budget)

ORDINANCE NO. 2014-073

AN ORDINANCE OF THE CITY COUNCIL OF THE CITY OF TEXARKANA, TEXAS, AMENDING THE BUDGET ESTIMATE OF THE REVENUES AND EXPENDITURES FOR THE FISCAL YEAR ENDING SEPTEMBER 30, 2014; ADOPTING THE BUDGET AND APPROPRIATING RESOURCES FOR THE BUDGET BEGINNING OCTOBER 1, 2014; REPEALING ALL ORDINANCES OR PARTS OF ORDINANCES IN CONFLICT HEREWITH TO THE EXTENT OF SUCH CONFLICT; CONTAINING A SEVERABILITY CLAUSE; PROVIDING FOR PUBLICATION; AND ESTABLISHING AN EFFECTIVE DATE.

BE IT ORDAINED BY THE CITY COUNCIL OF THE CITY OF TEXARKANA, TEXAS:

SECTION 1: That the budget estimate of the revenues and expenditures of the City of Texarkana, Texas, as prepared by the City Manager and appropriated by the City Council for the fiscal year beginning October 1, 2013, and ending September 30, 2014, be amended as shown in the City Budget for the fiscal year beginning October 1, 2014, and ending September 30, 2015.

SECTION 2: That the budget estimate of the revenues and expenditures of the City of Texarkana, Texas, as prepared by the City Manager and appropriated by the City Council for the fiscal year beginning October 1, 2014 and ending September 30, 2015, be and is hereby adopted and approved as the budget for such fiscal year.

SECTION 3: That a copy of said final adopted budget shall be filed with the City Secretary, the Texarkana Public Library, and placed on the City's website.

SECTION 4: GENERAL FUND

ANTICIPATED REVENUES/TRANSFERS IN

General Property Taxes	$10,616,498
Taxes – Other	15,039,812
Franchise Taxes	1,750,624
Fees and Permits	163,871
Charges for Services	954,740
Fines and Forfeitures	1,607,171
Grants and Entitlements	774,699
Intergovernmental Revenue	201,602
Other Revenue	76,235
Interest Income	30,068
Rental Income	15,056
Transfers In	550,650
Fund Balance Appropriated	0
Total General Fund Revenues	**$31,781,026**

AUTHORIZED EXPENDITURES/TRANSFERS OUT

Attachment: Ordinance No 70-2014 FY 2015 Budget [Revision 1] (1126 : Ordinance No. 2014-073 Budget)

General Government	
City Council	$67,011
City Manager	868,268
Administrative Services	0
Public Information Officer	0
City Secretary	0
Human Resources	317,247
Vital Statistics	0
City Attorney	167,000
Municipal Court	631,176
Finance	734,165
Total General Government	**$2,784,867**
Veterans Office	**$11,060**
Non-Operating	**$5,391,751**
Public Safety	
Police Administration	$1,812,626
Patrol Division	5,039,605
Services Division	2,596,289
Total Public Safety	**$9,448,520**
Fire and Emergency Management	
Fire Administration	$236,326
Fire Operations	5,205,656
Building and Life Safety	514,027
Homeland Security	33,000
Total Fire Department	**$5,988,999**
Public Works	
Engineering & Infrastructure	$182,647
Engineering Design	315,582
Street Maintenance	2,681,480
Sign & Signal	417,248
Storm water Management	243,453
Downtown Trans Enhancement	717,500
Community & Public Works	0
Total Community & Public Works	**$4,557,910**
Planning and Community Development	
Community Development	$510,647
Farmers Market	1,500
Total Planning and Community Development	**$512,147**
Inspections and Code Enforcement	
Inspection	$ 387,949
Environmental Services	155,426
Code Enforcement	298,985
Animal Control	267,285

Attachment: Ordinance No 70-2014 FY 2015 Budget [Revision 1] (1126 : Ordinance No. 2014-073 Budget)

Environmental Health Service	60,982
Total Inspections and Code Enforcement	**$1,170,627**
Parks & Recreation and Community Health	
Building Maintenance	$ 256,251
Parks & Recreation Administration	216,300
Parks Maintenance	1,035,762
Recreational Programs/Activities	203,207
Senior Citizens Program	84180
Special Events	20,975
Beverly Community Center	0
Sports Promotion	80,250
Total Parks & Recreation and Community Health	**$1,896,925**
Total Expenditures	**$31,762,806**

SECTION 5: NARCOTICS DIVISION OPERATIONS FUND

ANTICIPATED REVENUES

Forfeitures	$30,000
Investment Earnings	600
Receivable Interest	80
Fund Balance Appropriated	74,058
Total Anticipated Revenues	**$104,738**

AUTHORIZED EXPENDITURES

Operations	$104,738
Total Anticipated Expenditures	**$104,738**

SECTION 6: PERSONNEL POLICY FUND

ANTICIPATED REVENUES

Transfer from General Fund	$502,000
Investment Earnings	2,150
Total Anticipated Revenues	**$504,150**

AUTHORIZED EXPENDITURES

Termination Pay	$175,000
Operations	315,500
Total Anticipated Expenditures	**$330,500**

Attachment: Ordinance No 70-2014 FY 2015 Budget [Revision 1] (1126 : Ordinance No. 2014-073 Budget)

SECTION 7: WORKERS' COMPENSATION FUND

ANTICIPATED REVENUES

Transfers from Other Funds	$393,000
Interest Revenue	1,300
Anticipated Fund Balance Appropriated	150,200
Total Anticipated Revenues	**$544,500**

AUTHORIZED EXPENDITURES

Transfer to General Fund	$200,000
Insurance Premiums	344,500
Total Expenditures	**$544,500**

SECTION 8: COURT SECURITY FUND

ANTICIPATED REVENUES

Court Security Fees	$21,000
Fund Balance Appropriated	1,578
Total Anticipated Revenues	**$22,578**

AUTHORIZED EXPENDITURES

Operations	$22,578
Total Expenditures	**$22,578**

SECTION 9: GENERAL PROPERTY & LIABLITY FUND

ANTICIPATED REVENUES

Transfers from Other Funds	$214,205
Investment Earnings	260
Fund Balance Appropriated	16,480
Total Anticipated Revenues	**$230,945**

AUTHORIZED EXPENDITURES

Insurance Premiums	$230,945
Total Anticipated Expenditures	**$230,945**

SECTION 10: BI-STATE CENTRAL RECORDS AND COMMUNICATIONS

ANTICIPATED REVENUES

Transfer from City of Texarkana, Arkansas	$2,239,748
Total Anticipated Revenues	**$2,239,748**

Attachment: Ordinance No 70-2014 FY 2015 Budget [Revision 1] (1126 : Ordinance No. 2014-073 Budget)

AUTHORIZED EXPENDITURES

Operations	$2,239,748
Total Anticipated Expenditures	**$2,239,748**

SECTION 11: CONSERVATION REVOLVING LOAN FUND

ANTICIPATED REVENUES

Fund Balance Appropriated	$10,340
Transfers from Other Funds	3,085
Investment & Advertising Revenue	75
Total Anticipated Revenues	**$13,500**

AUTHORIZED EXPENDITURES

Operations	$13,500
Total Expenditures	**$13,500**

SECTION 12: COURT TECHNOLOGY FUND

ANTICIPATED REVENUES

Interest Revenue	$2
Court Technology Fees	27,500
Total Anticipated Revenues	**$27,502**

AUTHORIZED EXPENDITURES

Operations	$22,668
Total Expenditures	**$22,668**

SECTION 13: TECHNOLOGY FUND

ANTICIPATED REVENUES

Transfers from Other Funds	$202,974
Total Anticipated Revenues	**$202,974**

AUTHORIZED EXPENDITURES

Operations	$189,541
Total Anticipated Expenditures	**$189,541**

Attachment: Ordinance No 70-2014 FY 2015 Budget [Revision 1] (1126 : Ordinance No. 2014-073 Budget)

SECTION 14: TIRZ FUND

ANTICIPATED REVENUES

City Property Taxes	$296,295
Bowie County Property Taxes	78,500
Investment Earnings	800
Total Anticipated Revenues	**$375,595**

AUTHORIZED EXPENDITURES

Transfer to General Fund	$ 12,000
Transfer to Debt Service Fund	252,450
Operations	300
Total Authorized Expenditures	**$264,750**

SECTION 15: SUPPORTIVE HOUSING GRANT FUND

ANTICIPATED REVENUES

Grant Revenue	$314,450
Total Anticipated Revenues	**$314,450**

AUTHORIZED EXPENDITURES

Operations	$314,449
Total Authorized Expenditures	**$314,449**

SECTION 16: CDBG REVOLVING LOAN FUND

ANTICIPATED REVENUES

Grant Revenue	$100,000
Total Anticipated Revenue	**$100,000**

AUTHORIZED EXPENDITURES

Operations	$100,000
Total Authorized Expenditures	**$100,000**

SECTION 17: COMMUNITY DEVELOPMENT BLOCK GRANT FUND

ANTICIPATED REVENUES

Grant Revenue	$1,161,608
Total Anticipated Revenues	**$1,161,608**

Attachment: Ordinance No 70-2014 FY 2015 Budget [Revision 1] (1126 : Ordinance No. 2014-073 Budget)

AUTHORIZED EXPENDITURES

Operations	$1,161,608
Total Authorized Expenditures	**$1,161,608**

SECTION 18: EPA PETROLEUM GRANT FUND

ANTICIPATED REVENUES

Grant Revenue	$162,765
Total Anticipated Revenues	**$162,765**

AUTHORIZED EXPENDITURES

Operations	$162,765
Total Authorized Expenditures	**$162,765**

SECTION 19: EPA REVOLVING LOAN GRANT FUND

ANTICIPATED REVENUES

Grant Revenue	$837,333
Total Anticipated Revenues	**$837,333**

AUTHORIZED EXPENDITURES

Sub-Grants	$390,000
Project Loans	390,000
Operations	57,333
Total Authorized Expenditures	**$837,333**

SECTION 20: EPA MULTI-PURPOSE GRANT FUND

ANTICIPATED REVENUES

Grant Revenue	$188,236
Total Anticipated Revenue	**$188,236**

AUTHORIZED EXPENDITURES

Operations	$188,236
Total Authorized Expenditures	**$188,236**

SECTION 21: TDHCA HOME PROGRAM GRANT FUND

ANTICIPATED REVENUES

Grant Revenue	$411,625
Total Anticipated Revenues	**$411,625**

Attachment: Ordinance No 70-2014 FY 2015 Budget [Revision 1] (1126 : Ordinance No. 2014-073 Budget)

AUTHORIZED EXPENDITURES

Reconstruction Expenditures	$338,930
Operations	72,695
Total Authorized Expenditures	**$411,625**

SECTION 22: PEROT THEATRE OPERATIONS FUND

ANTICIPATED REVENUES

Transfer from Other Funds	$268,400
Revenue from Operations	32,000
Investment Earnings	375
Fund Balance Appropriated	23,003
Total Anticipated Revenues	**$323,778**

AUTHORIZED EXPENDITURES

Transfer to Building Maintenance Fund	$40,000
Operations	283,778
Total Authorized Expenditures	**$323,778**

SECTION 23: HOTEL OCCUPANCY TAX FUND

ANTICIPATED REVENUES

Transfer from Other Funds	$85,327
Fund Balance Appropriated	55,976
Hotel Occupancy Tax Revenue	1,218,000
Investment Earnings	751
Total Anticipated Revenues	**$1,360,054**

AUTHORIZED EXPENDITURES

Transfer to Other Funds	$842,458
Paid to Sub-Recipients	261,989
Operations	255,607
Total Authorized Expenditures	**$1,360,054**

SECTION 24: PEROT THEATRE BUILDING MAINTENANCE FUND

ANTICIPATED REVENUES

Fund Balance Appropriated	$27,500
Theatre Enhancement Fees	50,000
Transfers from Other Funds	40,000
Interest	2,500
Total Anticipated Revenues	**$120,000**

Attachment: Ordinance No 70-2014 FY 2015 Budget [Revision 1] (1126 : Ordinance No. 2014-073 Budget)

AUTHORIZED EXPENDITURES

Building Repairs and Enhancements	$120,000
Total Authorized Expenditures	**$120,000**

SECTION 25: HOUSING FUND

ANTICIPATED REVENUES

Fund Balance Appropriated	$90,000
Investment Earnings	10,000
Total Anticipated Revenues	**$100,000**

AUTHORIZED EXPENDITURES

Housing Match	$100,000
Total Authorized Expenditures	**$100,000**

SECTION 26: LAW ENFORCEMENT BLOCK GRANT FUND

ANTICIPATED REVENUES

Grant Revenue	$39,228
Investment Earnings	5
Total Anticipated Revenues	**$39,233**

AUTHORIZED EXPENDITURES

Tools and Equipment	$19,614
County ½ Share of Grant	19,614
Total Authorized Expenditures	**$39,228**

SECTION 27: LAW ENFORCEMENT STATE GRANT FUND

ANTICIPATED REVENUES

Fund Balance Appropriated	$6,534
Grant Revenue	6,500
Investment Earnings	35
Total Anticipated Revenues	**$13,069**

AUTHORIZED EXPENDITURES

Operations	$13,069
Total Authorized Expenditures	**$13,069**

Attachment: Ordinance No 70-2014 FY 2015 Budget [Revision 1] (1126 : Ordinance No. 2014-073 Budget)

SECTION 28: METROPOLITAN PLANNING ORGANIZATION

ANTICIPATED REVENUES

Grant Revenue	$228,757
City Contribution	12,243
Total Anticipated Revenues	**$241,000**

AUTHORIZED EXPENDITURES

Operations	$241,000
Total Authorized Expenditures	**$241,000**

SECTION 29: ECONOMIC DEVELOPMENT FUND

ANTICIPATED REVENUES

Fund Balance Appropriated	$156,379
Franchise Fees	400,000
Investment Earnings	4,200
Total Anticipated Revenues	**$560,579**

AUTHORIZED EXPENDITURES

Transfer to General Fund	$234,500
Economic Incentive Programs	100,000
Operations	151,079
Military Affairs	25,000
Grant/Loan Matching Funds	50,000
Total Authorized Expenditures	**$560,579**

SECTION 30: EPA BROWNFIELD GRANT FUND

ANTICIPATED REVENUES

Grant Revenue	$79,375
Total Anticipated Revenues	**$79,375**

AUTHORIZED EXPENDITURES

Operations	$79,375
Total Authorized Expenditures	**$79,375**

SECTION 31: ROTARY SPLASH PAD FUND

ANTICIPATED REVENUES

Interest Revenue	$ 40
Contributions	$37,624
Total Anticipated Revenues	**$37,664**

Attachment: Ordinance No 70-2014 FY 2015 Budget [Revision 1] (1126 : Ordinance No. 2014-073 Budget)

AUTHORIZED EXPENDITURES

Improvements	$0
Total Authorized Expenditures	**$0**

SECTION 32: DEBT SERVICE FUND

ANTICIPATED REVENUES

General Property Taxes	$4,965,555
Penalty and Interest	68,000
Transfers from Other Funds	957,348
Investment Earnings	3,500
Total Anticipated Revenues	**$5,994,403**

AUTHORIZED EXPENDITURES

Bond Payments	$5,738,883
Agent Fees	4,000
Total Authorized Expenditures	**$5,742,883**

SECTION 33: PUBLIC HEALTH FUND

ANTICIPATED REVENUES

Grant Revenue	$979,467
City Contribution	75,000
County Contribution	75,000
Investment Earnings	4,000
Clinic Fees	8,000
Total Anticipated Revenues	**$1,141,467**

AUTHORIZED EXPENDITURES

Health Administration	$171,852
Community and Rural Health Services	95,519
WIC	352,638
Public Health Services	104,238
Diabetes	80,802
Family Planning	203,516
Total Authorized Expenditures	**$1,008,565**

SECTION 34: TEXARKANA PUBLIC LIBRARY

ANTICIPATED REVENUES

City Contribution	$460,239
Other Revenue	451,174
Total Anticipated Revenues	**$911,413**

Attachment: Ordinance No 70-2014 FY 2015 Budget [Revision 1] (1126 : Ordinance No. 2014-073 Budget)

AUTHORIZED EXPENDITURES

Operations	$911,413
Total Authorized Expenditures	**$911,413**

SECTION 35: FEDERAL ASSET FORFEITURE FUND

ANTICIPATED REVENUES

Forfeitures	$35,000
Investment Earnings	250
Total Anticipated Revenues	**$35,250**

AUTHORIZED EXPENDITURES

Tools and Equipment	$30,000
Total Authorized Expenditures	**$30,000**

SECTION 36: EMPLOYEE BENEFITS FUND

ANTICIPATED REVENUES

Employer Contributions	$2,999,669
Employee Contributions	1,046,721
Investment Earnings	9,123
Contributions from Other Agencies	1,905,508
Other Revenue	121,033
Total Anticipated Revenues	**$6,082,054**

AUTHORIZED EXPENDITURES

Health Claims	$3,941,995
Insurance Premiums	625,118
HRA Funding	623,400
Administrative Expenses	891,541
Total Authorized Expenditures	**$6,082,054**

SECTION 37: FLEET SERVICES FUND

ANTICIPATED REVENUES

Fund Balance Appropriated	$124,456
Transfers from Other Funds	1,384,945
Investment Earnings	325
Other Revenue	10,500
Total Anticipated Revenues	**$1,520,226**

Attachment: Ordinance No 70-2014 FY 2015 Budget [Revision 1] (1126 : Ordinance No. 2014-073 Budget)

AUTHORIZED EXPENDITURES

Operations	$1,520,226
Total Authorized Expenditures	**$1,520,226**

SECTION 38: CAPITAL REPLACEMENT FUND

ANTICIPATED REVENUES

Fund Balance Appropriated	$264,685
Transfer from General Fund	1,000,000
Investment Earnings	245
Other Revenue	35,000
Total Anticipated Revenues	**$1,299,930**

AUTHORIZED EXPENDITURES

Transfer to Fleet Fund	$5,000
Vehicles and Equipment	1,294,930
Total Authorized Expenditures	**$1,299,930**

SECTION 39: FIREMEN'S FUND

ANTICIPATED REVENUES

Employer Contributions	$788,000
Employee Contributions	545,700
Investment Earnings	3,142,300
Total Anticipated Revenues	**$4,476,000**

AUTHORIZED EXPENDITURES

Retirement Payments	$2,184,000
Agent Fees	253,000
Operations	35,875
Total Authorized Expenditures	**$2,472,875**

SECTION 40: MEMBER CITY WATER REVENUE

ANTICIPATED REVENUES

Member City Water Revenue	$956,798
Total Anticipated Revenues	**$956,798**

AUTHORIZED EXPENDITURES

Operations	$956,798
Total Authorized Expenditures	**$956,798**

Attachment: Ordinance No 70-2014 FY 2015 Budget [Revision 1] (1126 : Ordinance No. 2014-073 Budget)

SECTION 41: BOND FUNDS COMBINED

ANTICIPATED REVENUES

Fund Balance Appropriated	$2,374,432
Investment Earnings	8,000
Total Anticipated Revenues	**$2,382,432**

AUTHORIZED EXPENDITURES

Project Expenditures	$2,382,432
Total Authorized Expenditures	**$2,382,432**

SECTION 42: TEXARKANA WATER UTILITIES – TEXAS REVENUE FUND

ANTICIPATED REVENUES

Water and Sewer Revenue	$15,805,626
Other Revenue	1,812,830
Investment Earnings	7,709
Total Anticipated Revenues	**$17,626,165**

AUTHORIZED EXPENDITURES

Transfers to Bond Funds	$561,481
Operations	12,899,492
Transfers Out	526,355
Other Expenditures	3,028,616
Total Authorized Expenditures	**$17,015,944**

SECTION 43: TEXARKANA WATER UTILITIES – TEXAS BOND RESERVE FUND

ANTICIPATED REVENUES

Investment Earnings	$2,999
Total Anticipated Revenues	**$2,999**

AUTHORIZED EXPENDITURES

Previously scheduled release of portion of reserve to 2005 Bond Fund that pays off in 2007	$1,025
Total Authorized Expenditures	**$1,025**

SECTION 44: TEXARKANA WATER UTILITIES – TEXAS 2004 BOND FUND

ANTICIPATED REVENUES

Fund Balance Appropriated	$120
Transfers from Other Funds	191,732

Attachment: Ordinance No 70-2014 FY 2015 Budget [Revision 1] (1126 : Ordinance No. 2014-073 Budget)

Investment Earnings	228
Total Anticipated Revenues	**$192,080**

AUTHORIZED EXPENDITURES

Bond Payments	$191,757
Agent Fees	323
Total Anticipated Expenditures	**$192,080**

SECTION 45: TEXARKANA WATER UTILITIES – 2005 BOND FUND

ANTICIPATED REVENUES

Transfers from Other Funds	$206,405
Investment Earnings	273
Total Anticipated Revenues	**$206,678**

AUTHORIZED EXPENDITURES

Bond Payments	$206,678
Total Anticipated Expenditures	**$206,678**

SECTION 46: TEXARKANA WATER UTILITIES – 2013 BOND FUND

ANTICIPATED REVENUES

Appropriated Fund Balance	$3,553
Transfers from Other Funds	162,361
Investment Earnings	130
Total Anticipated Revenues	**$166,044**

AUTHORIZED EXPENDITURES

Bond Payments	$166,044
Total Authorized Expenditures	**$166,044**

SECTION 47: TEXARKANA WATER UTILITIES – TEXAS CAPITAL IMPROVEMENT FUND

ANTICIPATED REVENUES

Transfers from Other Funds	$888,350
Investment Earnings	3,000
Other Fees	300
Fund Balance Appropriated	1,344,628
Total Anticipated Revenues	**$2,236,278**

AUTHORIZED EXPENDITURES

Project Expenditures	$2,236,278
Total Authorized Expenditures	**$2,236,278**

Attachment: Ordinance No 70-2014 FY 2015 Budget [Revision 1] (1126 : Ordinance No. 2014-073 Budget)

SECTION 48: TEXARKANA WATER UTILITIES – TEXAS INFRASTRUCTURE FUND

ANTICIPATED REVENUES

Transfers to Other Funds	$560,000
Investment Earnings	5,759
Fund Balance Appropriated	754,241
Total Anticipated Revenues	**$1,320,000**

AUTHORIZED EXPENDITURES

Project Expenditures	$1,320,000
Total Authorized Expenditures	**$1,320,000**

SECTION 49: TEXARKANA WATER UTILITIES – TEXAS CUSTOMER LOAN FUND

ANTICIPATED REVENUES

Investment Earnings	$113
Total Anticipated Revenues	**$113**

AUTHORIZED EXPENDITURES

	$0
Total Authorized Expenditures	**$0**

SECTION 50: TEXARKANA WATER UTILITIES – 2013 BOND CONSTRUCTION FUND

ANTICIPATED REVENUES

Investment Earnings	$720
Total Anticipated Revenues	**$720**

AUTHORIZED EXPENDITURES

	$0
Total Authorized Expenditures	**$0**

SECTION 51: TEXARKANA WATER UTILITIES – PERSONNEL POLICY FUND

ANTICIPATED REVENUES

Transfers from Other Funds	$70,000
Investment Earnings	472
Fund Balance Appropriated	7,588
Total Anticipated Revenues	**$78,060**

Attachment: Ordinance No 70-2014 FY 2015 Budget [Revision 1] (1126 : Ordinance No. 2014-073 Budget)

AUTHORIZED EXPENDITURES

Termination Pay	$40,000
Social Security	3,060
Post-Retirement Benefits	$35,000
Total Authorized Expenditures	**$78,060**

SECTION 52: TEXARKANA WATER UTILITIES – WAGGONER CREEK CAPITAL IMPROVEMENT FUND

ANTICIPATED REVENUES

Transfers from Other Funds	$250,000
Investment Earnings	11,994
Fund Balance Appropriated	2,518,897
Total Anticipated Revenues	**$2,780,891**

AUTHORIZED EXPENDITURES

Project Expenditures	$2,780,891
Total Authorized Expenditures	**$2,780,891**

SECTION 53: TEXARKANA WATER UTILITIES – LTWSC CAPITAL IMPROVEMENT FUND

ANTICIPATED REVENUES

Contributions from Other Agencies	$44,219
Transfers from Other Funds	355,782
Investment Earnings	4,400
Fund Balance Appropriated	509,448
Total Anticipated Revenues	**$913,849**

AUTHORIZED EXPENDITURES

Project Expenditures	$913,849
Total Authorized Expenditures	**$913,849**

SECTION 54: TEXARKANA WATER UTILITIES – MILLWOOD WTP DEPRECIATION FUND

ANTICIPATED REVENUES

		Texas
Transfers from Other Funds	$103,000	$60,711
Investment Earnings	359	222
Fund Balance Appropriated	1,247,354	357,045
Total Anticipated Revenues	**$1,350,713**	**$417,978**

Attachment: Ordinance No 70-2014 FY 2015 Budget [Revision 1] (1126 : Ordinance No. 2014-073 Budget)

AUTHORIZED EXPENDITURES

		Texas
Project Expenditures	$1,350,713	$417,978
Total Authorized Expenditures	**$1,350,713**	**$417,978**

SECTION 55: TEXARKANA WATER UTILITES – NORTH TEXARKANA WWTP DEPRECIATION FUND

ANTICIPATED REVENUES

		Texas
Transfers from Other Funds	$20,000	$7,800
Investment Earnings	22	7
Fund Balance Appropriated	32,978	12,863
Total Anticipated Revenues	**$53,000**	**$20,670**

AUTHORIZED EXPENDITURES

		Texas
Project Expenditures	$53,000	$20,670
Total Authorized Expenditures	**$53,000**	**$20,670**

SECTION 56: TEXARKANA WATER UTILITIES – SOUTH REGIONAL WWTP DEPRECIATION FUND

ANTICIPATED REVENUES

		Texas
Transfers from Other Funds	$150,000	$92,745
Investment Earnings	2,420	1,496
Fund Balance Appropriated	353,080	218,310
Total Anticipated Revenues	**$505,500**	**$312,551**

AUTHORIZED EXPENDITURES

		Texas
Project Expenditures	$505,500	$312,551
Total Authorized Expenditures	**$505,500**	**$312,551**

SECTION 57: TEXARKANA WATER UTILITIES – COMPOSTING FUND

ANTICIPATED REVENUES

		Texas
Transfers from Other Funds	$200,000	$123,660
Investment Earnings	1,220	754
Fund Balance Appropriated	154,780	95,701
Total Anticipated Revenues	**$356,000**	**$220,115**

AUTHORIZED EXPENDITURES

		Texas
Operations	$356,000	$220,115
Total Authorized Expenditures	**$356,000**	**$220,115**

Attachment: Ordinance No 70-2014 FY 2015 Budget [Revision 1] (1126 : Ordinance No. 2014-073 Budget)

SECTION 58: TEXARKANA WATER UTILITIES – EQUIPMENT ACQUISITION FUND

ANTICIPATED REVENUES

		Texas
Transfers from Other Funds	$300,000	$185,490
Investment Earnings	3,700	2,288
Fund Balance Appropriated	385,196	244,516
Total Anticipated Revenues	**$688,896**	**$432,294**

AUTHORIZED EXPENDITURES

		Texas
Equipment Expenditures	$688,896	$432,294
Total Authorized Expenditures	**$688,896**	**$432,294**

SECTION 59: TEXARKANA WATER UTILITIES – TECHNOLOGY FUND

ANTICIPATED REVENUES

		Texas
Transfers from Other Funds	$600,000	$370,980
Investment Earnings	1,697	1,049
Contributions from Other Agencies	263,314	0
Fund Balance Appropriated	481,705	350,707
Total Anticipated Revenues	**$1,346,716**	**$722,736**

AUTHORIZED EXPENDITURES

		Texas
Technology Expenditures	$1,346,716	$722,736
Total Authorized Expenditures	**$1,346,716**	**$722,736**

SECTION 60: That the City Council hereby approves the funding and purchases that are made pursuant to interlocal agreements as provided by Chapter 271, Subchapter (D) and (F) of the Texas Local Government Code, in this budget and authorizes the City Manager/Chief Executive Officer and his designated employees, at his discretion, to purchase, sign contracts and documents authorizing the payment of funds, and to expend public funds that have been expressly designated, approved, and appropriated in this budget, as set out in the 2014-2015 fiscal year Capital Replacement Fund.

SECTION 61: Operating funds encumbered on the financial records as of September 30, 2014, are hereby re-appropriated to Fiscal Year 2015.

SECTION 62: It is further provided that in case a section, clause, sentence or part of this Ordinance shall be deemed or adjudged by a Court of competent jurisdiction to be invalid, then such invalidity shall not affect, impair or invalidate the remainder of this Ordinance.

SECTION 63: All ordinances or parts of ordinances in conflict herewith are specifically repealed to the extent of such conflict.

SECTION 64: This Ordinance shall be in full force and effect from and after its passage and approval, and after the adoption of this budget or budget amendment, the budget officer shall provide for the filing

Attachment: Ordinance No 70-2014 FY 2015 Budget [Revision 1] (1126 : Ordinance No. 2014-073 Budget)

of a true copy of the approved budget or amendment in the Office of the City Secretary.

PASSED AND APPROVED and ordered published by the City Council of the City of Texarkana, Texas, in Regular Council Session on this the 11th day of August, 2014.

_____
BOB BRUGGEMAN, MAYOR

ATTEST:

_____
JENNIFER EVANS, CITY SECRETARY

Attachment: Ordinance No 70-2014 FY 2015 Budget [Revision 1] (1126 : Ordinance No. 2014-073 Budget)

TEXARKANA WATER UTILITIES
OPERATING BUDGET TOTALS
FISCAL YEAR 2015 TO FISCAL YEAR 2014 COMPARISON

		FY 2015						FY 2014						
Division		**Arkansas**	**Texas**	**Mandeville**	**Union**	**Totals**		**Arkansas**	**Texas**	**Mandeville**	**Union**	**Totals**		**Change**
110	Admin	152,598.00	236,790.00			389,388.00		126,686.00	208,373.00			335,059.00		54,329.00
120	Safety/Security	36,972.00	59,891.00			96,863.00		36,867.00	60,635.00			97,502.00		(639.00)
210	Acctg/Personnel	161,664.00	261,873.00	1,730.00	6,919.00	432,186.00		162,962.00	268,041.00	1,646.00	6,586.00	439,235.00		(7,049.00)
230	CIS	349,045.00	712,713.00			1,061,758.00		323,501.00	676,551.00			1,000,052.00		61,706.00
310	Customer Service	328,925.00	532,825.00	9,071.00	36,284.00	907,105.00		310,286.00	510,355.00	8,639.00	34,552.00	863,832.00		43,273.00
330	Field Services	242,129.00	393,091.00	6,687.00	26,746.00	668,653.00		241,036.00	396,456.00	6,711.00	26,842.00	671,045.00		(2,392.00)
410	Water Prod-WP		2,908,312.00			2,908,312.00			3,077,659.00			3,077,659.00		(169,347.00)
420	Water Prod-MW	1,075,339.00				1,075,339.00		1,017,290.00				1,017,290.00		58,049.00
490	IP Water		958,153.00			958,153.00			872,025.00			872,025.00		86,128.00
520	Wagner Cr		368,630.00			368,630.00			370,478.00			370,478.00		(1,848.00)
530	SRWWTP	1,416,417.00	2,279,616.00			3,696,033.00		1,375,480.00	2,250,313.00			3,625,793.00		70,240.00
540	NTWWTP	194,355.00	800.00			195,155.00		205,786.00	800.00			206,586.00		(11,431.00)
580	Composting	121,842.00	197,366.00			319,208.00		123,061.00	202,412.00			325,473.00		(6,265.00)
610	Ops Admin	93,438.00	151,356.00			244,794.00		92,816.00	152,662.00			245,478.00		(684.00)
612	Utility Constr	334,266.00	541,464.00			875,730.00		332,936.00	547,614.00			880,550.00		(4,820.00)
620	Water Distr	498,427.00	807,404.00	4,291.00	17,163.00	1,327,285.00		491,094.00	807,750.00	4,540.00	18,161.00	1,321,545.00		5,740.00
622	Water Distr-RR		28,556.00			28,556.00			30,359.00			30,359.00		(1,803.00)
630	Sewer Collection	399,615.00	647,318.00			1,046,933.00		391,018.00	644,646.00			1,035,664.00		11,269.00
640	Fleet Services	173,690.00	237,119.00			410,809.00		173,471.00	240,362.00			413,833.00		(3,024.00)
643	AR Police Veh	26,400.00				26,400.00		23,750.00				23,750.00		2,650.00
644	AR Fire Veh	35,850.00				35,850.00		36,200.00				36,200.00		(350.00)
645	AR PW Veh	119,150.00				119,150.00		120,150.00				120,150.00		(1,000.00)
646	AR Other Veh	11,950.00				11,950.00		11,850.00				11,850.00		100.00
710	Engineering	274,703.00	444,981.00			719,684.00		263,320.00	433,111.00			696,431.00		23,253.00
720	Engineering I&I	69,488.00	112,562.00			182,050.00		87,438.00	143,816.00			231,254.00		(49,204.00)
740	GIS Development	131,798.00	277,009.00			408,807.00		131,441.00	280,096.00			411,537.00		(2,730.00)
750	Environmental Svc	140,032.00	226,829.00			366,861.00		107,940.00	177,538.00			285,478.00		81,383.00
830/831	Leary		20,610.00			20,610.00			21,181.00			21,181.00		(571.00)
Total		**6,388,093.00**	**12,405,268.00**	**21,779.00**	**87,112.00**	**18,902,252.00**		**6,186,379.00**	**12,373,233.00**	**21,536.00**	**86,141.00**	**18,667,289.00**		**234,963.00**
														1.26%

TEXARKANA WATER UTILITIES
OPERATING BUDGET TOTALS
FISCAL YEAR 2014 REVISED TO FISCAL YEAR 2014 BUDGETED COMPARISON

		FY 2014 REVISED (PROJECTED)						FY 2014						
Division		**Arkansas**	**Texas**	**Mandeville**	**Union**	**Totals**		**Arkansas**	**Texas**	**Mandeville**	**Union**	**Totals**		**Change**
110	Admin	134,624.00	221,433.00			356,057.00		126,686.00	208,373.00			335,059.00		20,998.00
120	Safety/Security	32,706.00	53,793.00			86,499.00		36,867.00	60,635.00			97,502.00		(11,003.00)
210	Acctg/Personnel	141,333.00	246,683.00	2,656.00	10,622.00	401,294.00		162,962.00	268,041.00	1,646.00	6,586.00	439,235.00		(37,941.00)
230	CIS	381,782.00	647,865.00			1,029,647.00		323,501.00	676,551.00			1,000,052.00		29,595.00
310	Customer Service	298,365.00	490,739.00	8,306.00	33,225.00	830,635.00		310,286.00	510,355.00	8,639.00	34,552.00	863,832.00		(33,197.00)
330	Field Services	227,252.00	357,497.00	6,156.00	24,621.00	615,526.00		241,036.00	396,456.00	6,711.00	26,842.00	671,045.00		(55,519.00)
410	Water Prod-WP		2,576,989.00			2,576,989.00			3,077,659.00			3,077,659.00		(500,670.00)
420	Water Prod-MW	1,080,255.00				1,080,255.00		1,017,290.00				1,017,290.00		62,965.00
490	IP Water		932,383.00			932,383.00			872,025.00			872,025.00		60,358.00
520	Wagner Cr		340,265.00			340,265.00			370,478.00			370,478.00		(30,213.00)
530	SRWWTP	1,301,788.00	2,130,291.00			3,432,079.00		1,375,480.00	2,250,313.00			3,625,793.00		(193,714.00)
540	NTWWTP	215,172.00	800.00			215,972.00		205,786.00	800.00			206,586.00		9,386.00
580	Composting	121,156.00	199,277.00			320,433.00		123,061.00	202,412.00			325,473.00		(5,040.00)
610	Ops Admin	92,405.00	151,988.00			244,393.00		92,816.00	152,662.00			245,478.00		(1,085.00)
612	Utility Constr	269,835.00	443,825.00			713,660.00		332,936.00	547,614.00			880,550.00		(166,890.00)
620	Water Distr	424,989.00	699,023.00			1,124,012.00		491,094.00	807,750.00	4,540.00	18,161.00	1,321,545.00		(197,533.00)
622	Water Distr-RR		27,371.00			27,371.00			30,359.00			30,359.00		(2,988.00)
630	Sewer Collection	350,053.00	577,264.00			927,317.00		391,018.00	644,646.00			1,035,664.00		(108,347.00)
640	Fleet Services	170,553.00	235,874.00			406,427.00		173,471.00	240,362.00			413,833.00		(7,406.00)
643	AR Police Veh	26,400.00				26,400.00		23,750.00				23,750.00		2,650.00
644	AR Fire Veh	35,850.00				35,850.00		36,200.00				36,200.00		(350.00)
645	AR PW Veh	119,150.00				119,150.00		120,150.00				120,150.00		(1,000.00)
646	AR Other Veh	11,950.00				11,950.00		11,850.00				11,850.00		100.00
710	Engineering	267,366.00	439,765.00			707,131.00		263,320.00	433,111.00			696,431.00		10,700.00
720	Engineering I&I	79,247.00	130,348.00			209,595.00		87,438.00	143,816.00			231,254.00		(21,659.00)
740	GIS Development	152,215.00	250,366.00			402,581.00		131,441.00	280,096.00			411,537.00		(8,956.00)
750	Environmental Svc	108,848.00	179,032.00			287,880.00		107,940.00	177,538.00			285,478.00		2,402.00
830/831	Leary		18,344.00			18,344.00			21,181.00			21,181.00		(2,837.00)
Total		**6,043,294.00**	**11,351,215.00**	**17,118.00**	**68,468.00**	**17,480,095.00**		**6,186,379.00**	**12,373,233.00**	**21,536.00**	**86,141.00**	**18,667,289.00**		(1,187,194.00)
														-6.36%

City of Texarkana, Texas

Version: E

Briefing Sheet

Update Date: 7/7/2014 3:12 PM

Lead Department: Police **Action Officer:** Michael Henry, Captain

Subject: Resolution No. 2014-075 approving the application for the Edward Byrne Justice Assistance Grant providing a total grant in the amount of Forty-Eight Thousand Eight Hundred Twenty-Nine and No/100 Dollars ($48,829.00), where the City of Texarkana, Texas will receive Twenty-Four Thousand Four Hundred Fifteen and No/100 Dollars ($24,415.00) and Bowie County, Texas will receive Twenty-Four Thousand Four Hundred Fourteen and No/100 Dollars ($24,414.00).

Briefing:	7/14/2014	**Public Hearing:**	7/14/2014	**Second Briefing:**	July 28, 2014	**Council Vote:**	8/11/2014

Item Schedule
Schedule 1: Brief twice - vote once (six weeks)

Updates/History of Briefing:

NOT APPLICABLE

Executive Summary and Background Information:

For consideration is the 2014 Regular Local Solicitation for the Edward Byrne Justice Assistance Grant (JAG). The JAG is a pre-determined allocation, which based upon the amount, is shared with the Bowie County Sheriff's Office as a result of the city's federal designation as a disparate jurisdiction. The total funding for this round is $48,829.00, which will be shared with BCSO. TTPD plans to utilize their portion of the funds ($24,415.00) to procure two electronic whiteboards and training room tables and chairs. This equipment is needed to facilitate more interactive lectures and presentations as well as provide a more productive environment at the Department's training facilities. This will allow the Department to conduct higher quality training in-house and reduce the need for out-of-town travel.

Potential Options:

- None
-

Fiscal Implications:

The City of Texarkana, Texas, will not be required to furnish additional match funding to receive funds under the grant program

Staff Recommendation:

Approval of the grant application is recommended.

Advisory Board/Committee Review:

NONE

Board/Committee Recommendation:

City of Texarkana, Texas

NOT APPLICABLE

Advisory Board/Committee Meeting Date and Minutes:

NOT APPLICABLE

Attachments

a. Goals and Perspectives (DOCX)
b. RES 2014-075 Police JAG Grant (DOCX)
c. 2014 JAG Program Narrative (PDF)
d. 2014 JAG Budget Narrative (PDF)

Staff Coordination

Police	Jennifer Evans	Department Head Review	Skipped	06/23/2014 6:30 PM
Public Information Officer		Jennifer Evans	PIO Review	Skipped 06/23/2014 6:30 PM
City Manager	John Whitson	City Manager Review	Completed	07/03/2014 10:23 AM
City Council	Jennifer Evans	Meeting	Completed	06/25/2014 3:07 PM

Meeting History

06/23/14 City Council MOVED FORWARD Next: 07/14/14

Michael Henry briefed this item.

(Councilmember Miller left the meeting at 8:13 p.m. and returned to the meeting at 8:18 p.m.)

City of Texarkana, Texas

Developing Perspectives and Goals Pending Approval by the City Council:

Perspectives	Goals
Serve the Community	☐ Promote an Environmentally Sensitive & Livable Community ☑ Provide a Safe Community ☐ Deliver Quality Services ☐ Foster a Healthy Community
Run the Operations	☑ Enhance Community Preparedness & Responsiveness ☐ Maximize Partnership Opportunities ☐ Provide Courteous & Responsive Customer Service ☐ Model a Positive City Image ☐ Deliver Efficient Services ☐ Cultivate Community Involvement & Access
Manage the Resources	☐ Maintain Fiscal Strength ☑ Maximize Utilization & Resources ☐ Invest in Infrastructure & Transportation
Develop Personnel	☑ Develop a Skilled & Diverse Workforce ☐ Create a Positive & Rewarding Work Culture

Perspectives and Goals Additional Comments:

NONE

Resource Impact:

Staff time required if item is approved:	Medium

Other Potential Impacts:

NONE APPLICABLE

Public Information Plan:

☐	Newspaper Notice (Required by Statute)	☑	Public Hearing (Required by Statute)
☐	Public Forum/Input Session	☐	Press Release
☐	E-News Distribution	☐	Website Notice
☐	Social Media (Twitter, Facebook, etc.)	☐	Special Mailing
☐	Flyers Posted	☐	Banners Posted
☐	Survey	☐	Automated Phone Call
☐	None Required	☐	

Other:

Attachment: Goals and Perspectives (1131 : Res. 2014 ? 075 Police JAG Grant Application)

RESOLUTION NO. 2014-075

A RESOLUTION OF THE CITY COUNCIL OF THE CITY OF TEXARKANA, TEXAS, APPROVING THE APPLICATION FOR THE EDWARD BYRNE JUSTICE ASSISTANCE GRANT PROVIDING A TOTAL GRANT IN THE AMOUNT OF FORTY-EIGHT THOUSAND EIGHT HUNDRED TWENTY-NINE AND NO/100 DOLLARS ($48,829.00), WHERE THE CITY OF TEXARKANA, TEXAS WILL RECEIVE TWENTY-FOUR THOUSAND FOUR HUNDRED FIFTEEN AND NO/100 DOLLARS ($24,415.00) AND BOWIE COUNTY, TEXAS WILL RECEIVE TWENTY-FOUR THOUSAND FOUR HUNDRED FOURTEEN AND NO/100 DOLLARS ($24,414.00); AND ESTABLISHING AN EFFECTIVE DATE.

WHEREAS, the Office of Justice Programs of the United States Department of Justice has notified the City of Texarkana, Texas, as applicant and fiscal agent for available grant funds, that the City's application on behalf of the City and Bowie County, Texas, for funding under the FY2014 Edward Byrne Memorial Justice Assistance Grant in the amount of FORTY-EIGHT THOUSAND EIGHT HUNDRED TWENTY-NINE AND NO/100 DOLLARS ($48,829.00) to be shared with Bowie County, Texas, has been approved for the program and budget period ending September 30, 2016, subject to compliance with those conditions and limitations set out in the grant document attachments; and

WHEREAS, the Texarkana, Texas Police Department's share of the funding will be used to enhance the Department's training facilities and thereby improve the Department's ability to provide local training for its officers; and

WHEREAS, the City of Texarkana, Texas, will not be required to furnish additional match funding to receive funds under the grant program; and

WHEREAS, the City Council of the City of Texarkana, Texas, being informed of the nature and proposed use of said grant, does consider and find that the above-recommended uses and grant expenditures therefore are in the best interest of and will promote the health, safety and general welfare of the community;

NOW, THEREFORE, BE IT RESOLVED BY THE CITY COUNCIL OF THE CITY OF TEXARKANA, TEXAS:

SECTION 1: That the above-described Edward Byrne Memorial Justice Assistance Grant in the amount of **FORTY-EIGHT THOUSAND EIGHT HUNDRED TWENTY-NINE AND NO/100 DOLLARS ($48,829.00)** to be shared by and between the City of Texarkana, Texas, and Bowie County, Texas, be and is hereby accepted.

SECTION 2: That the City Manager be and is hereby authorized to undertake the necessary steps and execute the necessary documents including the Grant Acceptance document required for formal acceptance of the Edward Byrne Memorial Justice Assistant Grant from the United

Attachment: RES 2014-075 Police JAG Grant [Revision 1] (1131 : Res. 2014 ? 075 Police JAG Grant Application)

States Department of Justice, Office of Justice Programs, providing a total grant in the amount of **FORTY-EIGHT THOUSAND EIGHT HUNDRED TWENTY-NINE AND NO/100 DOLLARS ($48,829.00)** to be divided between the City of Texarkana, Texas, and Bowie County, Texas, where the City of Texarkana, Texas will receive **TWENTY-FOUR THOUSAND FOUR HUNDRED FIFTEEN AND NO/100 DOLLARS ($24,415.00)** and Bowie County, Texas will receive **TWENTY-FOUR THOUSAND FOUR HUNDRED FOURTEEN AND NO/100 DOLLARS ($24,414.00).**

SECTION 3: That this Resolution shall be in full force and effect from and after its passage and approval.

PASSED AND APPROVED in Regular Council Session on this the 11th day of August, 2014.

ATTEST:

_____ _____

JENNIFER EVANS, CITY SECRETARY BOB BRUGGEMAN, MAYOR

Attachment: RES 2014-075 Police JAG Grant [Revision 1] (1131 : Res. 2014 ? 075 Police JAG Grant Application)

2014 Justice Assistance Grant
City of Texarkana, Texas
Bowie County, Texas
2014-H3238-TX-DJ

Attachment: 2014 JAG Program Narrative (1131 : Res. 2014 ? 075 Police JAG Grant Application)

PROGRAM NARRATIVE

The City of Texarkana, Texas Police Department is submitting an application for the FY2014 Edward Byrne Memorial Justice Assistance Grant (JAG) program to be used for the following purpose:

The **Texarkana, Texas Police Department** plans to upgrade its training capabilities. The need for fuel, lodging, meals as well as the time lost while attending out-of-town training costs the Department training dollars that have begun to be stretched. Training in-house saves the Department money by eliminating these expenses. Often times travel expenses can be more than double the tuition costs of the training itself. The Department was able to obtain a location for a training and special operations center a few years ago. This allows more of our officers to receive training without the travel expenses. While some improvements have been made that have allowed training classes to be conducted at the training center, the audio-visual capabilities of the training room are limited. This has resulted in a less than satisfactory classroom experience and detracted from the impact of the instruction received there. The Department also has a smaller classroom/conference room on-site at the Department's main location. This room is used for smaller training sessions for sworn officers, civilian personnel and dispatchers. This room also lacks proper audio-visual equipment. The Department plans to purchase two interactive whiteboards to be placed into these rooms. These boards are state-of-the-art educational equipment and are used in countless classrooms today from elementary up to the university level. They will allow for more interactive lectures and presentations. The Department has a desktop computer to be connected to the electronic whiteboard at the training center. A laptop computer is needed to connect to the one at the Department headquarters. Training tables and chairs have already been purchased for the classroom at the training facility, but are needed at the secondary training location. There is no local funding neither budgeted nor anticipated for this acquisition. The two interactive whiteboards have a total estimated cost of $18,275.00. The laptop computer is estimated at $700.00 and the training tables and chairs $5440.00. The Department estimates the total cost of this project to be $24,415.00.

The **Bowie County Sheriff's Office** plans to continue upgrading its mobile information systems. Deputies from the Bowie County Sheriff's Office respond to calls for service as part of their regular duty assignments. The Bowie County Dispatch Center currently has the capability to use Computer Aided Dispatch software to notify deputies of calls, and give them the detailed information of the call they are being sent on. However, deputies do not have computers in their vehicles to receive the information. Giving deputies this technology would greatly assist them in their response to calls on a daily basis. This would allow them to be able to see the address, reporting person, suspect information, and call information while responding to a call for service. Patrol deputies will also be able to access our records management system, type reports and

access the Bowie County server all from the field. This will save deputies valuable time as they will be able to complete reports, upload pictures to the server and even book a prisoner into the jail while waiting for an impound wrecker. This will allow deputies to return to service quicker than in past giving them more time to serve the citizens of our county.

Last year the Bowie County Sheriff's Office requested funding to purchase computers to initiate this project. Due to current budget cuts and constraints, the Sheriff's Office will not be able to support funding to continue this project. Therefore they are requesting to purchase mobile hot spots, software and the three additional computers with this grant. The Bowie County Sheriff's Office currently has 22 deputies in its patrol division. If approved for this grant, this Office will be able to finish equipping the patrol division with this technology. There is no county funding neither budgeted nor anticipated for any of the aforementioned equipment. The sheriff's office anticipates the cost to obtain three mobile data computers to be approximately $3,000.00. Twenty-two mobile hot spots with one year of service will be $9,624.00. Twenty-two licenses for Microsoft Office are $9,490.00. Twenty-two Terminal Server licenses are $2300.00. The anticipated total for this project is $24,414.00.

Each agency and its respective governing bodies have agreed to disperse the $48,829.00 in JAG funding based on a percentage formula for their project needs. The money spent will be for law enforcement purposes only. It is anticipated that the projects will commence upon receipt of the funding, beginning in October, 2014 and project that the funds will be spent within a two-year period after they are received. However, the equipment purchased with the funding will continue to be utilized for the four-year grant reporting period (and longer) for this allocation. Each agency believes the acquisition of the equipment will benefit each of our local governments and citizenry by helping stabilize budgets, minimize and/or avoid reduction in essential services and counterproductive local tax increases, improve communication inoperability with public safety entities, reduce or prevent interruption of emergency public safety services in times of emergencies, improve crime detection and apprehension of criminals, as well as increase officer safety.

PERFORMANCE MEASURES:

The Texarkana Police Department expects the training equipment to improve its ability to provide quality in-house training to its officers, which will increase their operational efficiency and effectiveness, as well as stretch the local funding for continuing education. The Bowie County Sheriff's Office expects that the acquisition of the mobile computers, the hot spots and the software will improve its ability to provide it's deputies on patrol with critical information that will increase efficiency and improve officer safety.

Attachment: 2014 JAG Program Narrative (1131 : Res. 2014 ? 075 Police JAG Grant Application)

Performance Indicator	Performance Measures	Target
Amount of funds expended on equipment and/or supplies	Amount of funds expended to purchase equipment and/or supplies during the reporting period	**100 %**
Types of equipment and/or supplies purchased with JAG funds	Indicate the types of equipment and/or supplies purchased with JAG funds during the reporting period	• **Interactive Whiteboards and Computer** • **Training Room Tables and Chairs** • **Mobile Data Computers** • **Mobile Hot Spots and Software**
Performance Indicator	**Performance Measures**	**Target**
Number of units to directly benefit from equipment and/or supplies purchased with JAG funds	A. Number of organizational units to directly benefit from equipment purchased during the reporting period. Divided by B. Number of organizational units that requested award to purchase equipment during reporting period For percentage	**100 %**
Percentage of criminal justice staff who reported improved efficiency in their job performance or supplies purchased by JAG funds.	A. Number of staff who reported improved efficiency in their job performance during the reporting period. Divided by B. Number of staff receiving equipment For percentage	**100 %**
Percentage of criminal justice staff who reported increase in program quality as a result in the purchase of equipment or supplies by JAG funds.	A. Number of staff who reported an increase in program quality during the reporting period. Divided by B. Number of staff receiving equipment For percentage	**100 %**

Attachment: 2014 JAG Program Narrative (1131 : Res. 2014 ? 075 Police JAG Grant Application)

2014 Justice Assistance Grant
City of Texarkana, Texas
2014-H3238-TX-DJ

BUDGET NARRATIVE

City of Texarkana, Texas

Under the Focus on Training project, the JAG funds will be used to purchase two interactive whiteboards, one laptop computer, eight training tables and sixteen chairs. The cost to purchase the interactive whiteboards is estimated to be $18,275.00. The estimated cost of the tables and chairs is $5,440.00. The laptop computer is estimated $700.00.

The total cost of the project will be $24,415.00.

Bowie County, Texas

Under the Bowie County Sheriff's Office Continuing to Move Forward with Technology project, the JAG funds will be used to purchase three mobile data computers to go with several previously purchased. The use of the computers requires mobile hot spots for each vehicle the computers are installed in as well as Office software and terminal server licenses. It is estimated the cost of three mobile data computers is $3,000.00. The 22 mobile hotspots and one year of service is estimated to be $9,624.00. The 22 terminal server licenses are estimated to be $2,300.00. Twenty-two Microsoft Office licenses are estimated to be $9,490.00.

The total cost of the project will be $24,414.00.

Attachment: 2014 JAG Budget Narrative (1131 : Res. 2014 ? 075 Police JAG Grant Application)

City of Texarkana, Texas

Version: C

Briefing Sheet

Update Date: 6/18/2014 10:40 AM

Lead Department: Public Works **Action Officer:** Debbie Burk,

Subject: Ordinance No. 2014-079 amending Section 8-700(A) of the Zoning Ordinance by adding the definition of "donation bins".

Briefing:	7/14/2014	**Public Hearing:**	7/14/2014	**Second Briefing:**	July 28, 2014	**Council Vote:**	8/11/2014

Item Schedule
Schedule 1: Brief twice - vote once (six weeks)

Updates/History of Briefing:

Not applicable

Executive Summary and Background Information:

Local charity and service organizations have expressed concerns to the City of Texarkana, Texas and Texarkana, Arkansas about the need to control donation drop-off collection bins. Bins were being placed off-premise on commercial properties by for-profit or out of town non-profit organizations. In a cooperative effort with Texarkana, Arkansas, staff mailed out surveys to Texas side non-profit organizations. After reviewing concerns of these organizations, staff drafted a definition and regulations for “donation bin” that would restrict outside interests and conversely benefit local collections.

This item was discussed by the Planning and Zoning Commission at several meetings. At the Commission’s recommendation, staff prepared the following definition and regulations which specifically excludes for-profit bins on commercial properties. The bins shall follow accessory building regulations and setback requirements.

Following is the recommendation definition and regulations for “donation bin”:

8-700 SPECIAL DEFINITIONS AND EXPLAINATIONS NOTED IN USE REGULATIONS

84. Donation Bin – A publicly accessible bin or container designated as an accessory use (see definition) placed on the property of a non-profit organization by said non-profit (i.e. churches, Salvation Army, Goodwill) for the purpose of collecting donations of items such as textiles, shoes, toys, and/or small goods in order to recycle or resale these items. PLEASE NOTE THAT A DONATION BIN IS NOT ALLOWED TO BE PLACED ON PRIVATE COMMERCIAL PROPERTY BY A PRIVATE FOR-PROFIT COMPANY.

The following regulations shall apply to donation bins:

(1) Donation bins shall not be placed on any property without the express written permission from the property owner and the City of Texarkana, Texas.
(2) There shall be no more than one (1) donation bin per address where a non-profit existing business structure is located.
(3) Access to donation bins must be from a paved driveable surface.

(4) Donation bins shall follow accessory building setback requirements.
(5) Donation bins shall be of the type that are enclosed by use of a receiving door and locked so that the contents of the bin may not be assessed by anyone other than those responsible for the retrieval of the contents.
(6) Donation bins shall be emptied regularly and refuse around them collected and removed promptly so as not to create a public nuisance.
(7) Donation bins shall at all times be maintained and in good repair and clean condition, and shall remain free of graffiti or other markings.

(8) Standards pertaining to donation bins are as follows:

a. Donation bins shall not exceed six (6) feet in height or width.
b. Donation bins shall be durable, UV-resistant metal, molded hard plastic, or fiberglass material that is painted or constructed to match the façade of adjacent buildings.
c. Donation bins shall prominently display the name, address, and telephone number of the owner/operator of the bin in characters no less than four (4) inches in height and no greater than six (6) inches height.
d. Donation bins shall not be utilized for any advertising, signage, or promotional materials other than the display of the information of the owner/operator as stated in Section (c) above.

(9) The owner of the property shall be responsible for any above violations.

All donation bins profit or non-profit in existence at the time of adoption of this Ordinance must be in compliance with new regulations within ninety (90) days of the date of adoption.

Potential Options:

Fiscal Implications:

Staff Recommendation:

Staff recommends for approval of this new definition and regulations.

Advisory Board/Committee Review:

Planning and Zoning Commission

Board/Committee Recommendation:

The Planning and Zoning Commission unanimously recommended for approval of this proposed Amendment to the Zoning Ordinance to add a new definition and regulations for a "donation bin".

City of Texarkana, Texas

In cooperation with the City of Texarkana, Arkansas, their Planning Commission's recommendation will
be provided at later date.

Advisory Board/Committee Meeting Date and Minutes:

May 5, 2014.

Excerpt from approved Minutes:

Discussion and consider Amendment to Section 8-700(A) of the Zoning Ordinance adding the definition of "donation bins".

Ms. Jaster stated that this item had been discussed for several months by the Commission members and staff. She stated that the Commission had asked staff to prepare the definition of "donation bins" that would exclude for-profit bins on commercial properties. Following are the regulations and the definition adding "donation bins" to the definition list prepared by staff:

84. Donation Bin – A publicly accessible bin or container designated as an accessory use (see definition) placed on the property of a non-profit organization by said non-profit (i.e. churches, Salvation Army, Goodwill) for the purpose of collecting donations of items such as textiles, shoes, toys, and/or small goods in order to recycle or resale these items. PLEASE NOTE THAT A DONATION BIN IS NOT ALLOWED TO BE PLACED ON PRIVATE COMMERCIAL PROPERTY BY A PRIVATE FOR-PROFIT COMPANY.

The following regulations shall apply to donation bins:

(10) Donation bins shall not be placed on any property without the express written permission from the property owner and the City of Texarkana, Texas.

(11) There shall be no more than one (1) donation bin per address where a non- profit existing business structure is located. A shopping or strip center shall count as one address.

(12) Access to donation bins must be from a paved driveable surface.

(13) Donation bins shall follow accessory building setback requirements.

(14) Donation bins shall be of the type that are enclosed by use of a receiving door and locked so that the contents of the bin may not be assessed by anyone other than those responsible for the retrieval of the contents.

(15) Donation bins shall be emptied regularly and refuse around them collected and removed promptly so as not to create a public nuisance.

(16) Donation bins shall at all times be maintained and in good repair and clean condition, and shall remain free of graffiti or other markings.

(17) Standards pertaining to donation bins are as follows:

e. Donation bins shall not exceed six (6) feet in height or width.

f. Donation bins shall be durable, UV-resistant metal, molded hard plastic, or fiberglass material that is painted or constructed to match the façade of adjacent buildings.

g. Donation bins shall prominently display the name, address, and telephone number of the owner/operator of the bin in characters no less than four (4) inches in height and no greater than six (6) inches height.

h. Donation bins shall not be utilized for any advertising, signage, or promotional materials other than the display of the information of the owner/operator as stated in Section (c) above.

(18) The owner of the property shall be responsible for any above violations.

All donation bins profit or non-profit in existence at the time of adoption of this Ordinance must be in compliance with new regulations within ninety (90) days of the date of adoption.

Ms. Kinsey made a motion to approve the definition and regulations. Mr. Larkins seconded the motion. Members voted unanimously for approval of the motion.

RECOMMENDED FOR APPROVAL

Attachments

a. Goals and Perspectives (DOCX)
b. Ordinance No. 2014-079 (DOCX)
c. Letter from law firm concerning donation bin ordinances (PDF)

Staff Coordination

Assistant City Manager	Completed	Shirley Jaster	Department Head Review	06/18/2014 3:46 PM
Public Information Officer	06/18/2014 3:47 PM	Lisa Thompson	PIO Review	Completed
City Manager	John Whitson	City Manager Review	Completed	06/19/2014 7:26 AM
Municipal Prosecutor	Deborah Jones	Review	Completed	06/19/2014 10:41 AM
City Council	Jennifer Evans	Meeting	Completed	06/25/2014 3:07 PM

Meeting History

06/23/14 City Council MOVED FORWARD Next: 07/14/14

Shirley Jaster briefed this item.

(Councilmember Casteel left the meeting at 8:29 p.m. and returned to the meeting at 8:43 p.m.)

City of Texarkana, Texas

Developing Perspectives and Goals Pending Approval by the City Council:

Perspectives	Goals
Serve the Community	☐ Promote an Environmentally Sensitive & Livable Community ☑ Provide a Safe Community ☑ Deliver Quality Services ☑ Foster a Healthy Community
Run the Operations	☐ Enhance Community Preparedness & Responsiveness ☑ Maximize Partnership Opportunities ☐ Provide Courteous & Responsive Customer Service ☑ Model a Positive City Image ☐ Deliver Efficient Services ☐ Cultivate Community Involvement & Access
Manage the Resources	☐ Maintain Fiscal Strength ☐ Maximize Utilization & Resources ☐ Invest in Infrastructure & Transportation
Develop Personnel	☐ Develop a Skilled & Diverse Workforce ☐ Create a Positive & Rewarding Work Culture

Perspectives and Goals Additional Comments:

Community and citizen support to regulate the location and whether to allow for-profit donation bins has been a topic of local concern. Various newspaper articles have been written concerning this issue.

Resource Impact:

Staff time required if item is approved:	Select One By Clicking Here

Other Potential Impacts:

Regulation of unsightly bins or other containers in our city.

Public Information Plan:

☑	Newspaper Notice (Required by Statute)	☑	Public Hearing (Required by Statute)
☐	Public Forum/Input Session	☐	Press Release
☐	E-News Distribution	☑	Website Notice
☐	Social Media (Twitter, Facebook, etc.)	☑	Special Mailing
☐	Flyers Posted	☐	Banners Posted
☑	Survey	☐	Automated Phone Call
☐	None Required	☐	

Other:

Attachment: Goals and Perspectives (1135 : Ord. No. 2014-079 - Amendment to ZO to add definition for donation bins)

Publish

ORDINANCE NO. 2014-079

AN ORDINANCE OF THE CITY COUNCIL OF THE CITY OF TEXARKANA, TEXAS, AUTHORIZING THE AMENDMENT OF THE ZONING ORDINANCE SECTION 8-700 "*SPECIAL DEFINITIONS AND EXPLANATIONS NOTED IN USE REGULATIONS*" BY ADDING A DEFINITION OF "DONATION BIN" PROVIDING A SEVERABILITY CLAUSE; PROVIDING FOR PUBLICATION; AND ESTABLISHING AN EFFECTIVE DATE.

WHEREAS, the City Council of the City of Texarkana, Texas, after consideration of the findings and recommendations of the Planning and Zoning Commission of the City of Texarkana, Texas, determined that Section 8-700 "*Special Definitions and Explanations Noted In Use Regulations*" be amended by adding a definition of "Donation Bin" to read as follows:

8-700 SPECIAL DEFINITIONS AND EXPLANATIONS NOTED IN USE REGULATIONS

84. Donation Bin - A publicly accessible bin or container designated as an accessory use (see definition) placed on the property of a non-profit organization by said non-profit (i.e. churches, Salvation Army, Goodwill) for the purpose of collecting donations of items such as textiles, shoes, toys, and/or small goods in order to recycle or resale these items. PLEASE NOTE THAT A DONATION BIN IS NOT ALLOWED TO BE PLACED ON PRIVATE COMMERCIAL PROPERTY BY A PRIVATE FOR-PROFIT COMPANY.

The following regulations shall apply to donation bins:

(1) Donation bins shall not be placed on any property without the express written permission from the property owner and the City of Texarkana, Texas.
(2) There shall be no more than one (1) donation bin per address where a non-profit existing business structure is located.
(3) Access to donation bins must be from a paved driveable surface.
(4) Donation bins shall follow accessory building setback requirements.
(5) Donation bins shall be of the type that are enclosed by use of a receiving door and locked so that the contents of the bin may not be assessed by anyone other than those responsible for the retrieval of the contents.
(6) Donation bins shall be emptied regularly and refuse around them collected and removed promptly so as not to create a public nuisance.
(7) Donation bins shall at all times be maintained and in good repair and clean condition, and shall remain free of graffiti or other markings.

Attachment: Ordinance No. 2014-079 [Revision 2] (1135 : Ord. No. 2014-079 - Amendment to ZO to add definition for donation bins)

(8) Standards pertaining to donation bins are as follows:

a. Donation bins shall not exceed six (6) feet in height or width.

b. Donation bins shall be durable, UV-resistant metal, molded hard plastic, or fiberglass material that is painted or constructed to match the façade of adjacent buildings.

c. Donation bins shall prominently display the name, address, and telephone number of the owner/operator of the bin in characters no less than four (4) inches in height and no greater than six (6) inches height.

d. Donation bins shall not be utilized for any advertising, signage, or promotional materials other than the display of the information of the owner/operator as stated in Section (c) above.

(9) The owner of the property shall be responsible for any above violations.

All donation bins, profit or non-profit, in existence at the time of adoption of this Ordinance must be in compliance with new regulations within ninety (90) of the date of adoption.

WHEREAS, subsequent to the public hearing before the Planning and Zoning Commission, notice was given of another public hearing to be held by the City Council of the City of Texarkana, Texas, to consider the advisability of amending the Zoning Ordinance (Ordinance No. 127-70), as recommended by the Planning and Zoning Commission, and all citizens and parties of interest were notified that they would have an opportunity to be heard, said notice of time and place of such hearing by publication in the Texarkana Gazette, a newspaper of general circulation in such municipality; and

WHEREAS, all citizens and parties at interest have been given an opportunity to be heard in the matter of the proposed zoning amendment, and the City Council of the City of Texarkana, Texas, being informed as to the nature of the amendment of the Zoning Ordinance, have found and determined that the amendment shall be enacted as said amendment is in the best interest and will promote the health, safety and welfare of the community;

NOW, THEREFORE, BE IT ORDAINED BY THE CITY COUNCIL OF THE CITY OF TEXARKANA, TEXAS:

SECTION 1: That the City Manager or his designee is hereby authorized to amend the Zoning Ordinance (Ordinance No. 127-70) of the City of Texarkana, Texas, adopted on September 14, 1970, and made a part of the Code of Ordinances of said City by Section 30-1 of said code, by amending the Zoning Ordinance Section 8-700 "Special Definitions and Explanations Noted In The Use Regulations" by adding a new definition "Donation Bin" as aforementioned.

SECTION 2: That all ordinances or parts of ordinances in conflict herewith are specifically repealed to the extent of such conflict.

SECTION 3: That in case a section, clause, sentence or part of this Ordinance shall be deemed

Attachment: Ordinance No. 2014-079 [Revision 2] (1135 : Ord. No. 2014-079 - Amendment to ZO to add definition for donation bins)

Publish

or adjudged by a Court of competent jurisdiction to be invalid, then such invalidity shall not affect, impair or invalidate the remainder of this Ordinance.

SECTION 4: That a copy of the Zoning Ordinance No. 127-70, as amended herein, shall be filed and made available to interested citizens in accordance with Sec. 30-1. "Zoning Ordinance adopted" of the Code of Ordinances of the City of Texarkana, Texas.

SECTION 5: That the City Secretary be and is hereby directed to publish the caption of this Ordinance for three (3) consecutive days in the Texarkana Gazette within ten (10) days of the passage of this Ordinance, as provided in Article XI, Section 3 of the Charter of the City of Texarkana, Texas.

SECTION 6: That this Ordinance shall be in full force and effect from and after its passage, approval and publication.

PASSED AND APPROVED in regular Council Session on this the 11th day of August, 2014.

ATTEST:

JENNIFER EVANS, CITY SECRETARY	BOB BRUGGEMAN, MAYOR

Attachment: Ordinance No. 2014-079 [Revision 2] (1135 : Ord. No. 2014-079 - Amendment to ZO to add definition for donation bins)

COPILEVITZ & CANTER, LLC

ATTORNEYS AT LAW

310 W. 20TH STREET
SUITE 300
KANSAS CITY, MISSOURI 64108
(816) 472-9000 • FAX (816) 472-5000

Via Overnight Mail & E-mail

March 7, 2014

George Matteson, Esq.
Moore, Giles & Matteson, LLP
1206 N. State Line Avenue
Texarkana, AR 71854

Ms. Mary Beck
Planning Secretary
P.O. Box 2711
Texarkana, TX 75504

Re: Proposed Ordinance Pertaining to Charitable Donation Drop-Off Bins

Dear Mr. Matteson and Ms. Beck:

This firm represents The National Children's Cancer Society and Merchandise Pickup Services as partners in an unattended drop-off bin program, which they are currently operating in your city. We have been asked to contact you to offer our assistance in creating the best possible ordinance that will benefit both the city and the proper participants. It is our hope and expectation to have representatives at the hearing on March 11, 2014, to make a presentation and answer questions.

As an introduction to the issues, we thought it might be helpful to share with you our preliminary observations concerning the drafted ordinance. We appreciate the time and consideration that has gone into this process, and again, hope to be a part of it.

Before addressing the specifics of the ordinance, we would like to explain the benefit of these kinds of programs. First and foremost, they create an opportunity for citizens of your community to participate in a philanthropic movement, by taking items that they might otherwise discard and recycle them for the ultimate use of those who may be in a lesser economic position. The opportunity to recycle can help your community by removing items from being placed at the curbside for indefinite periods or filling the city's landfill. In addition, through the program offered by our clients there is an opportunity for those items to be sold in bulk with a significant portion of the proceeds benefitting The National Children's Cancer Society to support its programs that affect children in your community.

The drafted ordinance goes a long way to addressing some of the excesses communities have witnessed from these programs. Set forth are our suggestions for consideration and/or revision in the proposed ordinance.

Attachment: Letter from law firm concerning donation bin ordinances (1135 : Ord. No. 2014-079 - Amendment to ZO to add definition for

Unattended clothing bins operated by for-profit companies without a charitable beneficiary should be required to provide additional signage. The signage should state, in effect, that the bin is owned and operated by a for-profit entity, and that no charity will be benefitted from the donation. We would ask for your consideration to make a requirement that such language be placed on the front of the bins in letters no less than six inches in height. This will alert the citizens of your community to the difference between the bins operated in conjunction with charitable organizations and those that are simply there for profit. We believe that this is a very important point.

We also think the ordinance itself should be limited to those drop-off bins that are unattended. In some instances programs are run where there is actually a person at the location who interacts with the prospective donor. The considerations there are materially different; thus the ordinance should be limited to those bins that are unattended.

We are particularly curious regarding the determination of the size of the bin. We believe the industry size for these bins is six feet six inches in height, and not six feet. By having the additional six inches there is also the added benefit of having a slope, which keeps rainwater from accumulating. We would greatly appreciate your consideration in changing the height maximum to six feet six inches. The parties should not be put to unnecessary expense. Requiring charitable organizations to remove all existing bins that are six inches too tall and replace them with new bins six inches shorter would create unnecessary waste and redirect charitable assets that otherwise could have been directed to charitable programs in your community.

We would suggest that there be more detail placed in the permit process, whereby it becomes an administrative function in which no discretion is vested in the individual who oversees the process. The issuance of the permit should be automatic if certain basic requirements are met. A form should be developed for the applicants where they certify under oath that they meet the requirements, including the consent of the landowner for placement of the bin(s). Giving discretionary authority can lead to costly litigation.

We would also ask for consideration for extending the "grandfather" period from two years to three years, particularly if the size of the bin is not changed to the height of six feet six inches.

We hope you find our suggestions meaningful and useful. We remain available to you throughout this process, not as an adversary, but as a partner to work together to create best circumstance that is in everyone's interest.

Very truly yours,

Errol Copilevitz
For the Firm

EC:nas

City of Texarkana, Texas

Briefing Sheet

Version:
Update Date: 6/18/2014 9:53 AM

Lead Department: Public Works **Action Officer:** Debbie Burk,

Subject: Ordinance No. 2014-080 granting a Specific Use Permit to allow the one additional use of a tattoo studio on Lots 7 & 8, Block 29, Ghio-Fish Boulevard Addition, located in the tenant space at 3218 1/2 Texas Boulevard. Jeff Kelly, owner. David Williams, agent. (Due to Planning and Zoning Commission denial, a 3/4 vote by the City Council is required to approve this request).

Briefing:	7/14/2014	**Public Hearing:**	7/14/2014	**Second Briefing:**	July 28, 2014	**Council Vote:**	8/11/2014

Item Schedule
Schedule 1: Brief twice - vote once (six weeks)

Updates/History of Briefing:

Not applicable.

Executive Summary and Background Information:

S-654: This is a request by Jeff Kelly, owner, and David Williams, agent, for a Specific Use Permit, SUP, to allow the one additional use of a tattoo studio in the tenant space at 3218 ½ Texas Boulevard. This property is currently located in a small strip center that has recently been remodeled.

The adjacent zoning is General Retail to the north, south and west and General Retail and Single Family-2 to the east. The adjacent land usage is a closed gas station to the north and business uses to the south and west and a business use and residence to the east. The Comprehensive Plan has designated this as a retail area.

This property is zoned General Retail. A Specific Use Permit is required to allow the one additional use of a tattoo studio in this zoning district. The application of permanent cosmetics is also considered a tattoo as well as any inked body art. The State of Texas will regulate this business as to licensing and other health related issues.

The applicant did not indicate the hours of operation. If approved, this will need to be discussed at the meeting. There appears to be adequate parking at the location for this type business. If this request is approved, staff would suggest the following stipulations be placed in the Ordinance:

1. That the owner/or any employee performing the application of tattooing procedures be currently licensed by the State and meet all Federal, State and City licensing laws and health regulations. (A copy of the current license must be provided to the City prior to the opening of the business).
2. That if any complaints concerning minors or any violations of the regulations listed above occur, the City has the right to revoke the Specific Use Permit.
3. That if this use ever ceases at this location, the City may revoke the Specific Use Permit that allows a tattoo studio.
4. That the sale of tobacco products, nicotine products or e-cigarettes and drug paraphernalia is prohibited.
5. Any remodeling of the current building must meet all city codes and requires licensed

contractors.

6. No painting of the windows or the building with advertisement or graphic art.

All notification and applicant requirements have been met to consider this request.

Potential Options:

1. Approve or deny Ordinance No. 2014-080 to allow a tattoo studio at 3218 ½ Texas Boulevard.
2. If this request is approved, the above stipulations should be added to the Ordinance.

Fiscal Implications:

None.

Staff Recommendation:

In November, 2007 a request for a tattoo studio across Texas Boulevard at 3301 Texas Boulevard was denied by the City Council. There was citizen concern about the tattoo studio being in close proximity to the City's Historic district. See attached map of the historic district. Therefore, staff recommends for denial of this request.

Advisory Board/Committee Review:

Planning and Zoning Commission.

Board/Committee Recommendation:

The applicant(s) were not present at the meeting. The Planning and Zoning Commission unanimously recommended for denial of this request. Therefore, a ¾ vote by the City Council is required to approve this request. The Planning and Zoning Commission referenced a previous denial for a tattoo studio by the City Council in this area.

Several citizens (Cody Peek, Amanda Horton and Jim Peek) who are local business owners in the area spoke in opposition to this request. Written comments are attached.

Advisory Board/Committee Meeting Date and Minutes:

June 2, 2014.

Attachments

a. Goals and Perspectives (DOCX)
b. Ordinance No. 2014-080 (DOCX)
c. maps for Ord. 2014-080 (PDF)
d. Opposition letters for Ord. 2014-080 (PDF)
e. Historic District Map (PDF)

City of Texarkana, Texas

Staff Coordination

Assistant City Manager	Shirley Jaster	Department Head Review	Completed	06/18/2014 3:43 PM
Public Information Officer	Lisa Thompson	PIO Review	Completed	06/18/2014 3:44 PM
City Manager	John Whitson	City Manager Review	Completed	06/19/2014 7:14 AM
City Council	Jennifer Evans	Meeting	Completed	06/25/2014 3:07 PM

Meeting History

06/23/14 City Council MOVED FORWARD Next: 07/14/14

Shirley Jaster briefed this item.

City of Texarkana, Texas

Developing Perspectives and Goals Pending Approval by the City Council:

Perspectives	Goals
Serve the Community	☐ Promote an Environmentally Sensitive & Livable Community ☐ Provide a Safe Community ☐ Deliver Quality Services ☐ Foster a Healthy Community
Run the Operations	☐ Enhance Community Preparedness & Responsiveness ☐ Maximize Partnership Opportunities ☐ Provide Courteous & Responsive Customer Service ☑ Model a Positive City Image ☐ Deliver Efficient Services ☐ Cultivate Community Involvement & Access
Manage the Resources	☐ Maintain Fiscal Strength ☐ Maximize Utilization & Resources ☐ Invest in Infrastructure & Transportation
Develop Personnel	☐ Develop a Skilled & Diverse Workforce ☐ Create a Positive & Rewarding Work Culture

Perspectives and Goals Additional Comments:

None.

Resource Impact:

Staff time required if item is approved:	Select One By Clicking Here

Other Potential Impacts:

Staff feels approval of this request to allow a tattoo studio at this location would have an adverse impact on this area. This property is in close proximity to the City's Historic District.

Public Information Plan:

☑	Newspaper Notice (Required by Statute)	☑	Public Hearing (Required by Statute)
☐	Public Forum/Input Session	☐	Press Release
☐	E-News Distribution	☑	Website Notice
☐	Social Media (Twitter, Facebook, etc.)	☑	Special Mailing
☐	Flyers Posted	☐	Banners Posted
☐	Survey	☐	Automated Phone Call
☐	None Required	☑	Sign posted

Other:

Attachment: Goals and Perspectives (1136 : Ord. # 2014-080 (S-654: SUP to allow tattoo studio at 32181/2 Texas Blvd))

S-654

ORDINANCE NO. 2014-080

AN ORDINANCE OF THE CITY COUNCIL OF THE CITY OF TEXARKANA, TEXAS, AMENDING THE ZONING MAP SHOWING THE LOCATION, BOUNDARY AND USE OF CERTAIN PROPERTY BY THE GRANTING OF SPECIFIC USE PERMIT NO. S-654 TO ALLOW THE ONE ADDITIONAL USE OF A TATTOO STUDIO ON 7 AND 8, BLOCK 29, GHIO-FISH BOULEVARD ADDITION, LOCATED IN THE TENANT SPACE AT 3218 ½ TEXAS BOULEVARD IN THE CITY OF TEXARKANA, BOWIE COUNTY, TEXAS; CONTAINING A REPEALER CLAUSE; CONTAINING A SEVERABILITY CLAUSE; AND ESTABLISHING AN EFFECTIVE DATE.

WHEREAS, an application has been filed with the City of Texarkana, Texas, requesting an Amendment to the Zoning Ordinance so as to grant a **Specific Use Permit** to allow the **one additional use of a tattoo studio** on Lots 7 & 8, Block 29, Ghio-Fish Boulevard Addition, located in the tenant space at 3218 ½ Texas Boulevard in the City of Texarkana, Bowie County, Texas; and

WHEREAS, the Planning and Zoning Commission of the City of Texarkana, Texas and the City Council of the City of Texarkana, Texas, in compliance with the laws of the State of Texas with reference to the granting of zoning classifications and changes, have given the requisite notices by publication and otherwise, and after holding hearings and affording a full and fair hearing to all property owners generally and to all persons interested and situated in the affected area and in the vicinity thereof; and

WHEREAS, after consideration of said application, the Planning and Zoning Commission of the City of Texarkana, Texas, voted **unanimously Six (6) to Zero (0) to recommend denial of the application for the request to grant a Specific Use Permit to allow the one additional use of a tattoo studio** on said property; and

WHEREAS, after consideration of said application and the recommendation of the Planning and Zoning Commission, the City Council of the City of Texarkana, Texas, does hereby find that granting the **Specific Use Permit** is in the best interest of the public health, safety, morals and general welfare of the City;

NOW, THEREFORE, BE IT ORDAINED BY THE CITY COUNCIL OF THE CITY OF TEXARKANA, TEXAS:

SECTION 1: That the Zoning Ordinance of the City of Texarkana, Texas, Ordinance No. 127-70, passed and approved on September 14, 1970, be further amended so as to grant a **Specific Use Permit numbered S-654 for the purpose of allowing the one additional use of a tattoo studio** on the following described property, to-wit: **Lots 7 and 8, Block 29, Ghio-Fish Boulevard Addition, located at 1002 Westlawn Drive in the City of Texarkana, Bowie County, Texas.**

SECTION 2: That the following special terms and conditions are hereby imposed and made part of this Ordinance:

1. That the owner/or any employee performing the application of tattooing procedures be currently licensed by the State and meet all Federal, State and City licensing laws and health regulations. (A copy of the current license must be provided to the City prior to the opening of the business).
2. That if any complaints concerning minors or any violations of the regulations listed above occur, the City has the right to revoke the Specific Use Permit.

Attachment: Ordinance No. 2014-080 [Revision 2] (1136 : Ord. # 2014-080 (S-654: SUP to allow tattoo studio at 32181/2 Texas Blvd))

3. That if this use ever ceases at this location, the City may revoke the Specific Use Permit that allows a tattoo studio.
4. That the sale of tobacco products, nicotine products, e-cigarettes and drug paraphernalia is prohibited.
5. Any remodeling of the current building must meet all city codes and requires licensed contractors.
6. No painting of the windows or the building with advertisement or graphic art.

SECTION 2: All ordinances or parts of ordinances in conflict herewith are specifically repealed to the extent of such conflict.

SECTION 3: It is further provided that in case a section, clause, sentence or part of this Ordinance shall be deemed or adjudged by a court of competent jurisdiction to be invalid, then such invalidity shall not affect, impair, or invalidate the remainder of this Ordinance.

SECTION 4: That this Ordinance shall be in full force and effect from and after its passage and approval.

PASSED AND APPROVED in regular Council Session on this the 11th day of August, 2014.

ATTEST:

_____ _____

JENNIFER EVANS, CITY SECRETARY BOB BRUGGEMAN, MAYOR

Attachment: Ordinance No. 2014-080 [Revision 2] (1136 : Ord. # 2014-080 (S-654: SUP to allow tattoo studio at 32181/2 Texas Blvd))

Attachment: maps for Ord. 2014-080 (1136 : Ord. # 2014-080 (S-654: SUP to allow tattoo studio at 32181/2 Texas Blvd))

Attachment: maps for Ord. 2014-080 (1136 : Ord. # 2014-080 (S-654: SUP to allow tattoo studio at 32181/2 Texas Blvd))

TEX-Jaster, Shirley

From: Cody Peek <cody@reliancetxk.com>
Sent: Monday, June 02, 2014 4:43 PM
To: TEX-Jaster, Shirley
Subject: Tattoo Parlor Rezoning - Strip Center at 3218 Texas Blvd.

Shirley,

I purchased the shopping center at 3303 – 3307 Texas Boulevard approximately 3 months ago. I purchased this building with previous knowledge that a tattoo parlor had been denied re-zoning on the corner of College Drive and Texas boulevard.
It was under that pretense that I purchased and remodeled my shopping center to attract new businesses. We now have a full shopping center with tenants that prefer that their businesses not be adjacent to a tattoo parlor.

I am not only an owner of a business and real estate across the street from the proposed zoning change, but also a resident of the Highland Park neighborhood at 3510 Wood Street. I have two small children that we frequently take to the park that is directly south of the proposed zoning change.

My wife and I ask that you please deny the request to rezone the property at 3218 Texas Boulevard.
Thanks,

Cody Peek
Vice President

RELIANCE
MECHANICAL CONTRACTORS

P O Box 6561
Texarkana, TX 75505
cody@reliancetxk.com
903-223-0946 Phone
903-949-1550 Mobile
903-223-1754 Fax
www.RelianceTXK.com

CONFIDENTIALITY NOTICE: This e-mail, including any attachments, contains information from Reliance Plumbing Group, Inc., which may be confidential or privileged. The information is intended to be for the use of the individual or entity named above. If you are not the intended recipient, be aware that any disclosure, copying, distribution or use of the contents of this information is prohibited. If you have received this email in error, please notify the sender immediately by "reply to sender only" message and destroy all electronic and hard copies of the communication, including attachments.

Attachment: Opposition letters for Ord. 2014-080 (1136 : Ord. # 2014-080 (S-654: SUP to allow tattoo studio at 3218 1/2 Texas Blvd))

June 2, 2014

RE: 3218 Texas Blvd Specific Use Rezoning

To Whom It Concerns:

I own the property at 3223 Main St, directly behind the proposed Tattoo Parlor. I purchased and have completely renovated this residential property. I oppose the specific use rezoning of 3218 Texas Blvd. I am trying to attract families who wish to relocate to the Highland Park Neighborhood.

Respectfully,

Jimmy W Peek

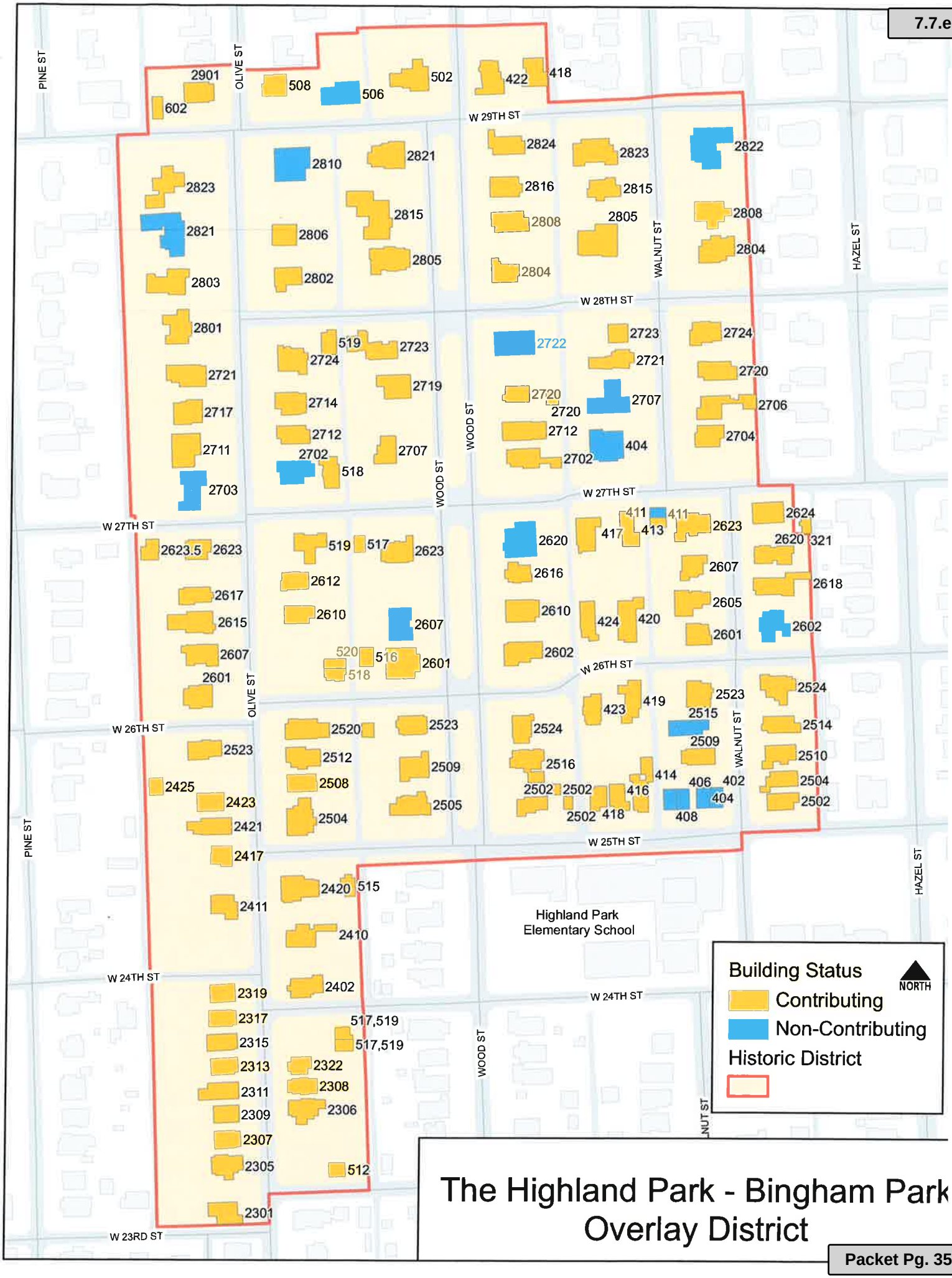

The Highland Park - Bingham Park Overlay District

Attachment: Historic District Map (1136 : Ord. # 2014-080 (S-654: SUP to allow tattoo studio at 32181/2 Texas Blvd))

City of Texarkana, Texas

Version: B

Briefing Sheet

Update Date: 6/18/2014 10:06 AM

Lead Department: Public Works **Action Officer:** Debbie Burk,

Subject: Ordinance No. 2014-082 rezoning Lot 1 and west part of Lot 2, Block 7, Western Hills 2nd Addition, located at 22 Meadow Lane. Single Family-2 to Office. Jim and Rhonda Richey, owners. Shaun Dierkson, agent. (Due to Planning and Zoning Commission denial, a 3/4 vote by the City Council is required to approve this request).

Briefing:	Public Hearing:	Second Briefing:	Council Vote:
7/14/2014	7/14/2014	July 28, 2014	8/11/2014

Item Schedule
Schedule 1: Brief twice - vote once (six weeks)

Updates/History of Briefing:

Not applicable

Executive Summary and Background Information:

Z-14-6: This is a request by Jim and Rhonda Richey, owners, and Shaun Dierkson, Dierkson Hospice, agent, to rezone Lot 1 and the west part of Lot 2, Block 7, Western Hills 2nd Addition, located at 22 Meadow Lane from Single Family-2 to Office. The proposed use of the property is an office building for Dierksen Hospice. The current use is a single family residence. The applicant has indicated that there is adequate room for office parking at this location.

The adjacent zoning is SF-2 to the east and south, and General Retail across Summerhill Road to the west. The adjacent land use is I-30 right-of-way/Mall Drive to the north, residences to the south and east and a Shell Convenience Store to the west.

Should this request be approved, a screening device will be required along the east property line. Staff would also suggest that additional stipulations to extra paved parking and commercial code upgrades be made as stipulations of the ordinance if the request is approved.

The Comprehensive Plan has designated this as a low density residential area.

All notification and application requirements have been met to consider this request.

Potential Options:

1. Approve or deny Ordinance No. 2014-082 allowing Office zoning at 22 Meadow Lane.
2. If this request is approved, staff would recommend a Planned Development (PD) designation be placed on the property with the following stipulations:
   - The existing structure must be remodeled and upgraded to commercial codes for any business use including any required parking.
   - A 7' screening device is required along the east property line.
   - The following uses are prohibited: any non-single family residential use (i.e. duplexes, triplexes, townhouses, apartments), fraternity or sorority houses, hotel or motel, emergency health care or medical clinic, financial institution (title or cash store), day care facility.

Fiscal Implications:

None

Staff Recommendation:

This existing residence has its driveway access fronting on Meadow Lane which is the entry street to a large residential neighborhood located to the east of Summerhill Road. No additional driveway access would be granted to the property from Summerhill Road. Therefore, all traffic associated with this business would be on Meadow Lane. Staff has concerns that an increase in traffic would result from this office use and bring business traffic into a quiet residential area. Approval of this request to Office zoning could set a precedent for similar office requests that could lead to the decline of this strong residential neighborhood. Staff recommends for denial of this request.

Advisory Board/Committee Review:

Planning and Zoning Commission

Board/Committee Recommendation:

The Planning and Zoning Commission unanimously recommended for denial of this request. Therefore,
a ¾ vote by the City Council is required to approve this request. The reason for denial is to maintain the existing single family residential neighborhood and follow the city land use comprehensive plan. In addition, rezoning to Office would set a precedent for similar requests in this residential area.

At the Planning and Zoning meeting, the applicant provided an email letter from residents in favor of allowing his office for Dierksen Hospice at this location. See attached copy.

Staff reported that several calls and emails had been received in opposition to this request. See attached copies.

Advisory Board/Committee Meeting Date and Minutes:

June 2, 2014

Attachments

a. Ordinance No. 2014-082 (DOCX)
b. Goals and Perspectives (DOCX)
c. Maps for Ord. No. 2014-082 (PDF)
d. Opposition emails for Ord. 2014-082 (PDF)
e. Email in favor of Ord. 2014-082 (PDF)

City of Texarkana, Texas

Staff Coordination

Assistant City Manager	Completed	Shirley Jaster 06/18/2014 3:45 PM	Department Head Review	
Public Information Officer	06/18/2014 3:46 PM	Lisa Thompson	PIO Review	Completed
City Manager	John Whitson	City Manager Review	Completed	06/19/2014 7:21 AM
City Council	Jennifer Evans	Meeting	Completed	06/25/2014 3:07 PM

Meeting History

06/23/14 City Council MOVED FORWARD Next: 07/14/14

Shaun Dierkson briefed this item. Mr. Dierkson submitted documents for council review. Shirley Jaster added additional comments for this item in regards to Planning and Zoning Commission denial.

Z-14-6

ORDINANCE NO. 2014-082

AN ORDINANCE OF THE CITY COUNCIL OF THE CITY OF TEXARKANA, TEXAS, AMENDING THE ZONING ORDINANCE OF THE CITY OF TEXARKANA, TEXAS, BY REZONING LOT 1 AND WEST PART OF LOT 2, BLOCK 7, WESTERN HILLS 2ND ADDITION, LOCATED AT 22 MEADOW LANE IN THE CITY OF TEXARKANA, BOWIE COUNTY, TEXAS FROM SINGLE FAMILY-2 TO OFFICE; CONTAINING A REPEALER CLAUSE; CONTAINING A SEVERABILITY CLAUSE; AND ESTABLISHING AN EFFECTIVE DATE.

WHEREAS, an application has been filed requesting an amendment to the Zoning Ordinance of the City of Texarkana, Texas, to rezone Lot 1 and west part of Lot 2, Block 7, Western Hills 2nd Addition, located at 22 Meadow Lane in the City of Texarkana, Bowie County, Texas, from **Single Family-2 to Office;** and

WHEREAS, the Planning and Zoning Commission of the City of Texarkana, Texas and the City Council of the City of Texarkana, Texas, in compliance with the laws of the State of Texas with reference to the granting of zoning classifications and changes, have given the requisite notices by publication and otherwise, and after holding hearings and affording a full and fair hearing to all property owners generally and to all persons interested and situated in the affected area and in the vicinity thereof; and

WHEREAS, after consideration of said application, the Planning and Zoning Commission of the City of Texarkana, Texas **voted six (6) to zero (0) to recommend denial of the application for rezoning** from **Single Family-2 to Office** to the City Council of Texarkana, Texas; and

WHEREAS, after consideration of said application and the recommendation of the Planning and Zoning Commission, the City Council of the City of Texarkana, Texas, does hereby find that rezoning the property from **Single Family-2 to Office** is in the best interest of the public health, safety, morals and general welfare of the City;

NOW, THEREFORE, BE IT ORDAINED BY THE CITY COUNCIL OF THE CITY OF TEXARKANA, TEXAS:

SECTION 1: That the Zoning Ordinance of the City of Texarkana, Texas, Ordinance No. 127-70, passed and approved on September 14, 1970, be and is hereby further amended to rezone Lot 1 and west part of Lot 2, Block 7, Western Hills 2nd Addition, located at 22 Meadow Lane in the City of Texarkana, Bowie County, Texas, from **Single Family-2 to Office.**

SECTION 2: It is further provided that in case a section, clause, sentence or part of this Ordinance shall be deemed or adjudged by a court of competent jurisdiction to be invalid, then such invalidity shall not affect, impair, or invalidate the remainder of this Ordinance.

Attachment: Ordinance No. 2014-082 [Revision 1] (1138 : Ord. # 2014-082 (Z-14-6: SF-2 to O at 22 Meadow Ln.))

SECTION 3: All Ordinances or parts of Ordinances in conflict herewith are specifically repealed to the extent of such conflict.

SECTION 4: That this Ordinance shall be in full force and effect from and after its passage and approval.

PASSED AND APPROVED in Regular Council Session on this the 11th day of August, 2014.

ATTEST:

_____ _____

JENNIFER EVANS, CITY SECRETARY BOB BRUGGEMAN, MAYOR

Attachment: Ordinance No. 2014-082 [Revision 1] (1138 : Ord. # 2014-082 (Z-14-6: SF-2 to O at 22 Meadow Ln.))

City of Texarkana, Texas

Developing Perspectives and Goals Pending Approval by the City Council:

Perspectives	Goals
Serve the Community	☐ Promote an Environmentally Sensitive & Livable Community ☐ Provide a Safe Community ☐ Deliver Quality Services ☐ Foster a Healthy Community
Run the Operations	☐ Enhance Community Preparedness & Responsiveness ☐ Maximize Partnership Opportunities ☐ Provide Courteous & Responsive Customer Service ☑ Model a Positive City Image ☐ Deliver Efficient Services ☐ Cultivate Community Involvement & Access
Manage the Resources	☐ Maintain Fiscal Strength ☐ Maximize Utilization & Resources ☐ Invest in Infrastructure & Transportation
Develop Personnel	☐ Develop a Skilled & Diverse Workforce ☐ Create a Positive & Rewarding Work Culture

Perspectives and Goals Additional Comments:

The Planning and Zoning Commission and staff's responsibility is to create a positive city image and follow the city land use comprehensive plan. It is in the best interest of the city to deny this request and maintain this established single family residential neighborhood.

Resource Impact:

Staff time required if item is approved:	Select One By Clicking Here

Other Potential Impacts:

None

Public Information Plan:

☑	Newspaper Notice (Required by Statute)	☑	Public Hearing (Required by Statute)
☐	Public Forum/Input Session	☐	Press Release
☐	E-News Distribution	☑	Website Notice
☐	Social Media (Twitter, Facebook, etc.)	☑	Special Mailing
☐	Flyers Posted	☐	Banners Posted
☐	Survey	☐	Automated Phone Call
☐	None Required	☑	Sign posted

Other:

Attachment: Goals and Perspectives (1138 : Ord. # 2014-082 (Z-14-6: SF-2 to O at 22 Meadow Ln.))

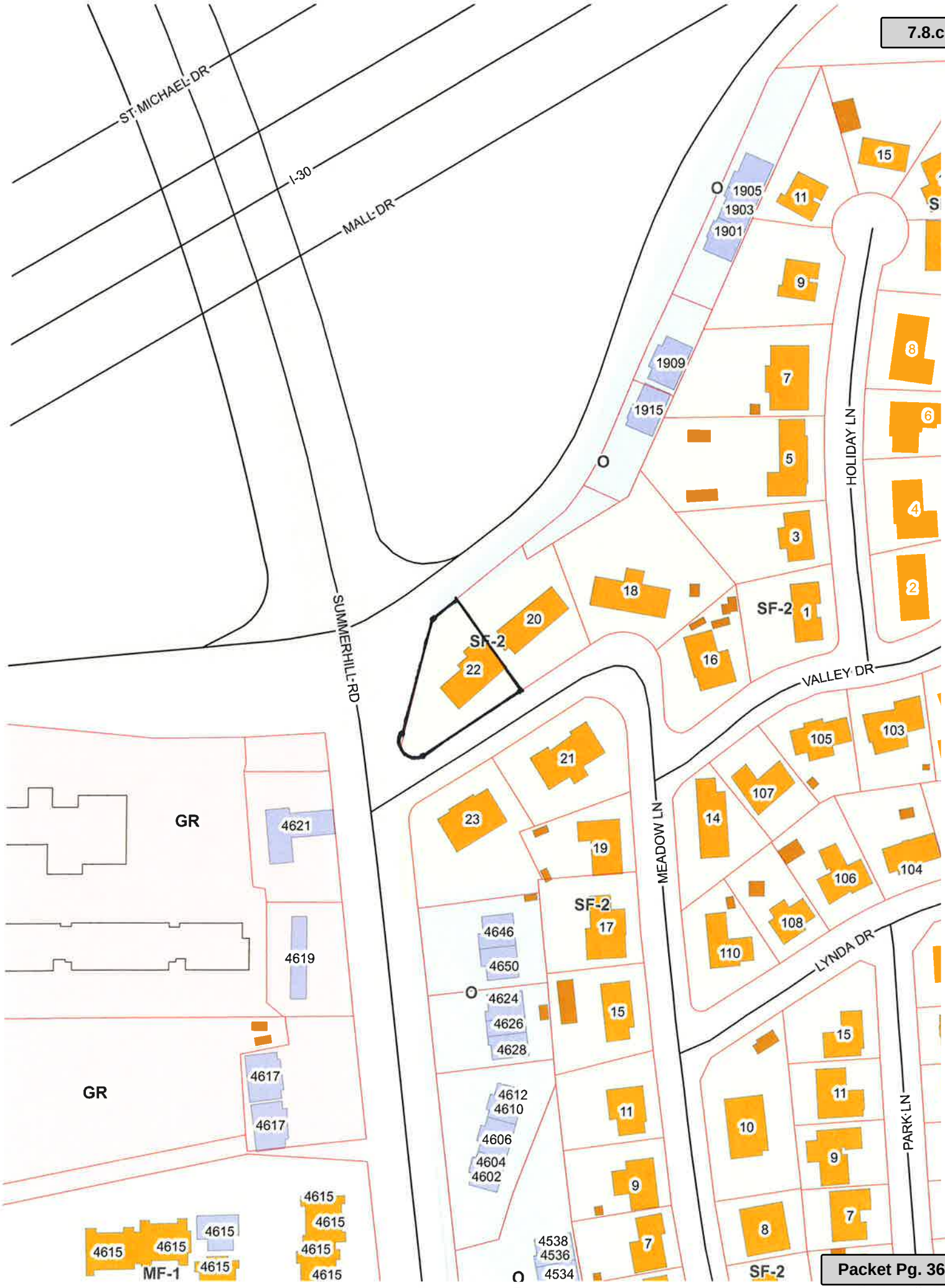

Attachment: Maps for Ord. No. 2014-082 (1138 : Ord. # 2014-082 (Z-14-6: SF-2 to O at 22 Meadow Ln.))

Attachment: Maps for Ord. No. 2014-082 (1138 : Ord. # 2014-082 (Z-14-6: SF-2 to O at 22 Meadow Ln.))

Attachment: Maps for Ord. No. 2014-082 (1138 : Ord. # 2014-082 (Z-14-6: SF-2 to O at 22 Meadow Ln.))

TEX-Burk, Debbie

To: TEX-Jaster, Shirley (Jaster@txkusa.org)
Subject: Meadow Lane zoning case

A Mr. J.B. Elder called about the zoning case. Said he had no objection to an office at the location but was concerned about increased traffic. Cited the many cars that are already at the group home. Said it is hard getting onto Summerhill Road at this intersection. Will make copy of this for file.

Debbie Burk
Administrative Specialist
Planning and Zoning Department
CITY OF TEXARKANA, TEXAS
Office – (903) 798-3945
Fax – (903) 794-1257
Email: burk@txkusa.org

Email communications through this office may be subject to Texas Public Records laws and may be shared with others.

Attachment: Opposition emails for Ord. 2014-082 (1138 : Ord. # 2014-082 (Z-14-6: SF-2 to O at 22 Meadow Ln.))

TEX-Jaster, Shirley

From: Scott Turner (LTR) <turners@mscdirect.com>
Sent: Thursday, June 12, 2014 2:11 PM
To: TEX-Jaster, Shirley
Subject: RE: test email

I've lived in this area since 1985 and I just wanted to throw my 2 cents in, my wife and I both would not like to see any residential houses turned into a business. We both love this area and have raised 2 kids here, if I need to sign or attend a meeting just let me know. Thanks

---

From: TEX-Jaster, Shirley [mailto:Jaster@txkusa.org]
Sent: Wednesday, June 11, 2014 5:20 PM
To: Scott Turner (LTR)
Subject: test email

Shirley Jaster
Assistant City Manager
Director of Planning and Zoning
City of Texarkana Texas
Office: 903-798-3949
Cell: 903-244-8728
Fax: 903-794-1257

Email: jaster@txkusa.org

Emai communications through this office may be subject to Texas Public Records laws and may be shared with others

DISCLAIMER:
This e-mail is intended for the use of the addressee(s) only and may contain privileged, confidential, or proprietary information that is exempt from disclosure under law. If you are not the intended recipient, please do not read, copy, use or disclose the contents of this communication to others. Please notify the sender that you have received this e-mail in error by replying to the e-mail. Please then delete the e-mail and destroy any copies of it. Thank you.

Attachment: Opposition emails for Ord. 2014-082 (1138 : Ord. # 2014-082 (Z-14-6: SF-2 to O at 22 Meadow Ln.))

TEX-Burk, Debbie

From: shaun dierksen <sdierksen@dierksenhospice.com>
Sent: Tuesday, June 03, 2014 2:41 PM
To: TEX-Burk, Debbie
Subject: FW: Property at 22 Meadow lane

From: mary lou thornton [mailto:lou62963@gmail.com]
Sent: Wednesday, May 28, 2014 3:38 PM
To: sdierksen@dierksenhospice.com
Subject: Property at 22 Meadow lane

Royce and I talked at length after you and your wife left. We have since spoken to Mrs. Zacha, Jim and Peggy Whiteside, and Tim and Tammie Wann.

I realized Royce's quietness while you were here as his being in thought about the options. We now consider that if you follow through with your designs to make the landscaping better, put up an effective and attractive privacy fence, and direct the comings and goings of your staff from the Summerhill Rd. or Mall Drive Rd. behind the house, this might be a better scenario than our concern over what type of people might buy the house if it remains on the market.

Therefore, we are not going to contest the rezoning. Mrs. Zacha will follow our decision. I gave your number to both the Wann's and the Whiteside's so they can contact you if they have further questions. I trust it was ok for me to share your contact information.

Mary Lou Thornton
903-277-7876

Attachment: Email in favor of Ord. 2014-082 (1138 : Ord. # 2014-082 (Z-14-6: SF-2 to O at 22 Meadow Ln.))

City of Texarkana, Texas

Version: I

Briefing Sheet

Update Date: 7/7/2014 3:11 PM

Lead Department: City Engineer **Action Officer:** Mashell Daniel,

Subject: Resolution No. 2014-067 accepting the bid of Six Hundred Ninety Thousand, Five Hundred and Fifty-One Dollars and Eighty Nine Cents ($690,551.89) from J.R. Pope Company, Inc. and authorizing the City Manager to enter into a contract for the construction of STEP Project II Downtown Sidewalk Enhancements.

Briefing: 7/14/2014	**Public Hearing:** 6/23/2014	**Second Briefing:** July 14, 2014	**Council Vote:** 7/28/2014

Item Schedule
Schedule 1: Brief twice - vote once (six weeks)

Updates/History of Briefing:

City staff recommends accepting the bid of $690,551.89 from J.R. Pope Company, Inc. & Authorizing the City Manager to enter into a contract for the construction of STEP Project II Downtown Sidewalk Enhancements.

Executive Summary and Background Information:

The City of Texarkana, Texas will be accepting bids to construct STEP Project II – Downtown Sidewalk Enhancements. This project will consist of demolition and reconstruction of various sidewalks, lighting, curbs, and gutters in the downtown area from Broad Street and Texas Blvd. to West 4th Street and Pine Street.

The first briefing to the City Council will be on Monday June 9, 2014. Plans and project locations will be presented at the first briefing. Bids will be opened on June 30, 2014 and a public hearing and 2nd briefing will be on June 23 and July 14, 2014 respectively. The council will be presented a resolution to consider accepting a bid and entering in to an agreement to construct the project at the 2nd briefing. Council will be scheduled to vote to accept/reject resolution on July 28, 2014.

Potential Options:

- Accept bid to construct proposed project
- Reject bid to construct proposed project

Fiscal Implications:

Funding for the project will come from the grant match budgeted in the Economic Development Fund.

Staff Recommendation:

Step 1 – Staff presents construction plans to council for STEP Project II – Downtown Sidewalk Enhancements at the first briefing on June 9, 2014.
Step 2- Staff will present a resolution to council to consider accepting a bid and entering into an agreement to construct the project on July 14, 2014.
Step 3 – Council will be scheduled to vote to accept/ reject resolution on July 28, 2014.

Advisory Board/Committee Review:

NONE

Board/Committee Recommendation:

NOT APPLICABLE

Advisory Board/Committee Meeting Date and Minutes:

NOT APPLICABLE

Attachments

a. Goals and Perspectives (DOCX)
b. Exhibit 'A' STEP II OVERALL MAP (PDF)
c. Exhibit 'B-1' STEP II Sheets 1-20 (PDF)
d. Exhibit 'B-2' STEP II Sheets 21-47 (PDF)
e. Exhibit 'B-3' STEP II Sheet 48-67 (PDF)
f. STEP PROJECT II BID TAB(PDF)
g. 2014-067 Step II Resolution (DOC)

Staff Coordination

Public Works Department	Kyle Dooley	Department Head Review	Completed	05/27/2014 9:21 AM
Community Redevelopment and Grants	Craig Lindholm	Review	Completed	05/27/2014 9:28 AM
Finance Department	Charlie Bassett	Review	Completed	05/28/2014 2:24 PM
Assistant City Manager	Shirley Jaster	Review	Completed	05/28/2014 5:48 PM
Public Information Officer	Lisa Thompson	Action Completed		06/02/2014 1:38 PM
City Manager	John Whitson	City Manager Review	Completed	06/02/2014 1:58 PM
City Council	Jennifer Evans	Meeting	Completed	06/25/2014 2:26 PM

Meeting History

06/09/14	City Council	MOVED FORWARD	Next: 06/23/14
06/23/14	City Council	MOVED FORWARD	Next: 07/14/14

No citizen spoke at this public hearing. Kyle Dooley mentioned that bids open on June 30th and updated information would be provided for council at the July 14th council meeting.

City of Texarkana, Texas

Developing Perspectives and Goals Pending Approval by the City Council:

Perspectives		Goals
Serve the Community	☑	Promote an Environmentally Sensitive & Livable Community
	☑	Provide a Safe Community
	☐	Deliver Quality Services
	☑	Foster a Healthy Community
Run the Operations	☐	Enhance Community Preparedness & Responsiveness
	☐	Maximize Partnership Opportunities
	☐	Provide Courteous & Responsive Customer Service
	☑	Model a Positive City Image
	☐	Deliver Efficient Services
	☑	Cultivate Community Involvement & Access
Manage the Resources	☐	Maintain Fiscal Strength
	☑	Maximize Utilization & Resources
	☑	Invest in Infrastructure & Transportation
Develop Personnel	☐	Develop a Skilled & Diverse Workforce
	☑	Create a Positive & Rewarding Work Culture

Perspectives and Goals Additional Comments:

NONE

Resource Impact:

Staff time required if item is approved:	Low

Other Potential Impacts:

NONE APPLICABLE

Public Information Plan:

☑	Newspaper Notice (Required by Statute)	☐	Public Hearing (Required by Statute)
☑	Public Forum/Input Session	☐	Press Release
☐	E-News Distribution	☐	Website Notice
☐	Social Media (Twitter, Facebook, etc.)	☐	Special Mailing
☐	Flyers Posted	☐	Banners Posted
☐	Survey	☐	Automated Phone Call
☐	None Required	☐	

Other:

Attachment: Goals and Perspectives [Revision 1] (1124 : Res No. 2014 - 067 R STEP Project II Downtown Sidewalk Enhancements DPW 14 -

STEP Project II -- Downtown Sidewalk Enhancements -- Overall Layout

Attachment: Exhibit 'A' STEP II OVERALL MAP (1124 : Res No. 2014 - 067 R STEP Project II Downtown Sidewalk Enhancements DPW 14 - 02)

CITY OF TEXARKANA, TEXAS
CONSTRUCTION PLANS FOR
STEP PROJECT II
DOWNTOWN SIDEWALK ENHANCEMENTS
CSJ: 0919 – 19 – 070

MAYOR

BOB BRUGGEMAN

COUNCIL MEMBERS

BRAD CASTEEL
WILLIE RAY
TINA VEAL-GOOCH
BRIAN MATTHEWS
BILL MILLER
JOSH DAVIS

CITY MANAGER

JOHN WHITSON

DIRECTOR OF PUBLIC WORKS

KYLE DOOLEY, P.E.

Index of Sheets

Sht #	Description
1	Overall Layout
2	Overall Quantities
3	General Notes
Existing Cond/ Demo & Plan-Profile Sheets	
4-5	Texas Blvd South
6-7	South Broad Street
8-9	North Broad Street
10-11	Broad St & Texas Blvd.
12-13	Texas Blvd.
14-15	Texas Blvd. & 4th Street
16-17	4th Street
18-19	4th Street & Main Street
20	Perot Plan
21-22	Main Street
23	Broad Street
24-25	4th Street
Details	
26	Misc. Details 1
27	Driveway Details
28-31	*Ped-05 Details
32-34	*PRD - 13
35	Misc Details 2
36-38	*Water Utility Details
39	Lighting Plan
40-51	*Electric Details
52-63	*Traffic Control Details
64	*EC(6) - 93
65	EPIC
66	SWP3 Plan
67	SWP3

The plans above with an * have been reviewed and approved under my supervision.

Mashell Daniel P.E.

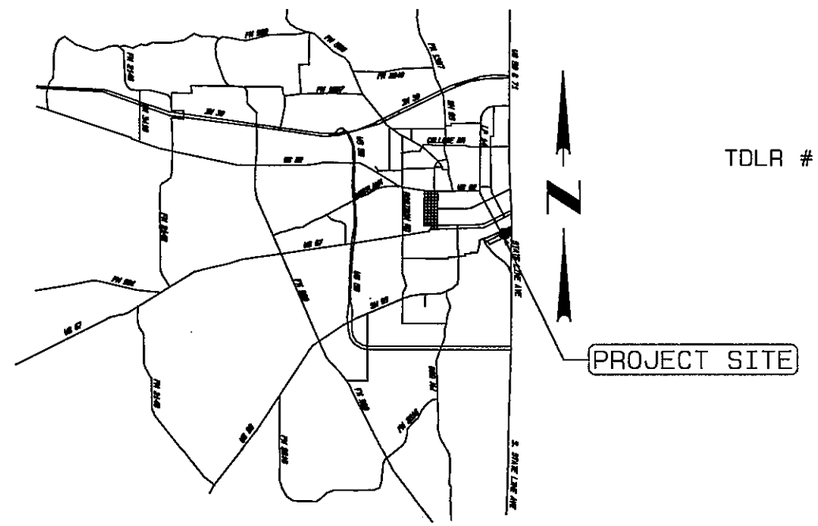

TDLR # _____

STATE OF TEXAS
MASHELL L. DANIEL
108544
LICENSED
PROFESSIONAL ENGINEER

RECOMMENDED Mashell Daniel

STATE OF TEXAS
B. KYLE DOOLEY
95648
REGISTERED
PROFESSIONAL ENGINEER

RECOMMENDED _____

CITY OF TEXARKANA 1873

APPROVED BY THE CITY OF TEXARKANA, TEXAS
THIS _____ DAY OF _____ IN THE YEAR OF _____
APPROVED _____ MAYOR
ATTEST _____ CITY SECRETARY

DPW 14-01
STP 2011 (215) TE

SET NO. _____

Attachment: Exhibit 'B-1' STEP II Sheets 1-20 (1124 : Res No. 2014 - 067 R STEP Project II Downtown Sidewalk Enhancements DPW 14 - 02)

STEP Project II -- Downtown Sidewalk Enhancements -- Overall Layout

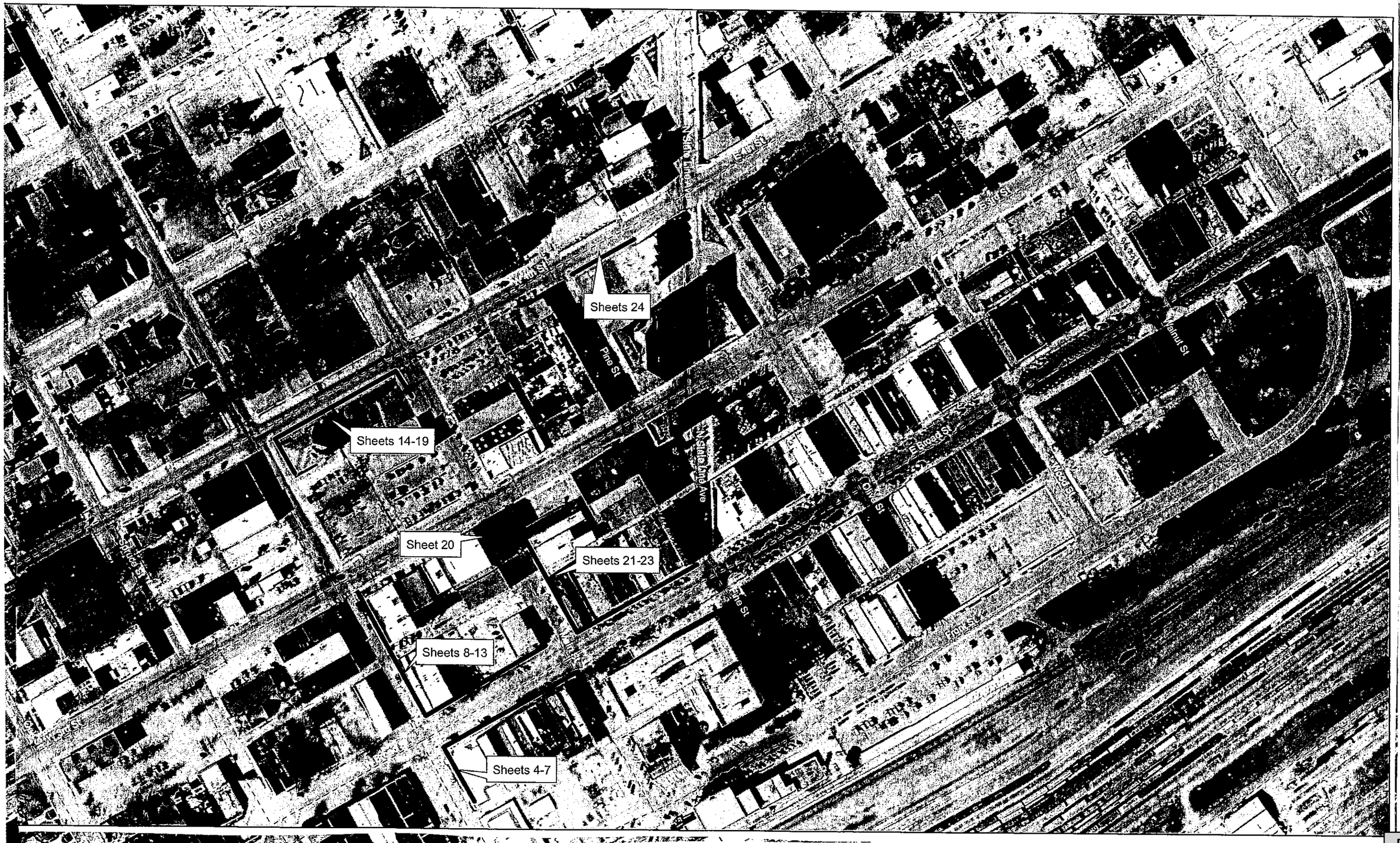

REVISION | DATE

CITY OF TEXARKANA, TEXAS
220 Texas Blvd., Texarkana, Texas 75501 903-798-3948

PROJECT: STEP
DATE: Apr 22, 2014
DESIGNED BY: WLD
DRAWN BY: WLD
CHECKED BY: WLD
APPROVED BY: BKD

OVERALL LAYOUT

STEP PROJECT
Dept. of Engineering & Infrastructure
City of Texarkana, Texas

DRAWING

Item No.	Description	TxDOT Spec Reference	Quantity	Unit
1.	Right of Way Prep	100	22.5	STA
2.	Remove Light Pole Foundation	104	13	EA
3.	Remove & Replace Irrigation Lines & Sprinklers	N/A	1	LS
4.	Remove Trees	100	5	EA
5.	Remove Tree Grates	100	8	EA
6.	Adjust Sewer Clean Out	N/A	2	EA
7.	Install Concrete Sidewalk	531	2445.5	SY
8.	Install Concrete Curb & Gutter	529	1928.5	LF
9.	Install Concrete Driveway	530	176.5	SY
10.	Install Asphalt Pavement	340	618.5	SY
11.	Install Type 1 Curb Ramp	531	18	EA
12.	Install Type 2 Curb Ramp	531	3	EA
13.	Install Reversed Type 2 Curb Ramp	531	2	EA
14.	Install Type 7 Curb Ramp	531	3	EA
15.	Install Special Ramp (TY A)	531	2	EA
16.	Install Special Ramp (TY B)	531	1	EA
17.	Install Handrail (TY A)	531	54	LF
18.	Install 2" Counduit	618	1919	LF
19.	Install Light Poles	610	32	EA
20.	Install Light Pole Foundation	416	32	EA
21.	Install Concrete Pavers	528	57.5	SY
22.	Install Raised Island	360,529	95	SY
23.	Install Sign Sleeve	644	8	EA
24.	Water Meter Adjustments	N/A	20	EA
25.	Water Valve Adjustment	N/A	8	EA
26.	Fire Hydrant Adjustment	N/A	2	EA
27.	Install Tree	N/A	10	EA
28.	Install Grate	471	13	EA
29.	Install Slot Drain	472	28.5	LF
30.	Install Sod	162	153	SY
31.	Sawcut Sidewalk	531	405	LF
32.	Traffic Control Plan	814	1	LS

ADDITIVE ALTERNATE NO. 1

Item No.	Description	TxDOT Spec Reference	Quantity	Unit
1.	Type 1 Curb Ramp	531	4	EA
2.	Concrete Sidewalk	531	14	SY
3.	Concrete Driveway	360	41	SY
4.	Install Sign Sleeve	644	6	EA
5.	Install Light Pole	610	1	EA
6.	Install Light Pole Foundation	416	1	EA
7.	Install Bench	N/A	2	EA
8.	Install Trash Can	N/A	2	EA
9.	Install Planter	N/A	3	EA

ADDITIVE ALTERNATE NO. 2

(Locations to be field determined.)

Item No.	Description	TxDOT Spec Reference	Quantity	Unit
1.	Install Bench	N/A	6	EA
2.	Install Trash Can	N/A	6	EA
3.	Install Planter	N/A	3	EA
4.	Install Bicycle Rack	N/A	2	EA

REVISION | DATE

CITY OF TEXARKANA, TEXAS
220 Texas Blvd., Texarkana, Texas 75501 903-798-3948

PROJECT: STEP
DATE: Apr 22, 2014
DESIGNED BY: MJD
DRAWN BY: MJD
CHECKED BY: BKO
APPROVED BY: BKO

OVERALL QUANTITIES

STEP PROJECT
Dept. of Engineering & Infrastructure
City of Texarkana, Texas

DRAWING

Attachment: Exhibit 'B-1' STEP II Sheets 1-20 (1124 : Res No. 2014 - 067 R STEP Project II Downtown Sidewalk Enhancements DPW 14 - 02)

EXISTING UTILITIES

CONTRACTOR SHALL NOTIFY TEXAS ONE-CALL 48HRS PRIOR TO BEGINNING CONSTRUCTION AND SHALL VERIFY LOCATION OF UTILITIES. 1-800-245-4545

EXISTING LIGHT POLES WILL BE REMOVED BY THE CITY. LIGHT POLE FOUNDATIONS WILL BE REMOVED BY THE CONTRACTOR. PLEASE PROVIDE ADVANCED NOTICE TO THE CITY OF DEMO WORK IN THE AREA OF A LIGHT POLE.

WATER & SEWER UTILITIES LOCATED WITHIN THE PROJECT LIMITS MAY HAVE TO BE ADJUSTED. ALL ADJUSTMENTS SHALL CONFORM TO TEXARKANA WATER UTILITY STANDARDS WHICH ARE OBTAINABLE AT 801 WOOD STREET, TEXARKANA, TEXAS.

LIGHT POLE

LIGHT POLES SHALL BE HALOPHANE COLORADO ALUMINUM POLE GRANVILLE PREMIER II LED MODEL # COA 14 F5J 12 P07 ABFG BX OR APPROVED EQUAL. CONDUIT TO CONNECT LIGHT POLES TO EXISTING SERVICE IS SUBSIDIARY TO LIGHT POLE ITEM.

LIGHT FIXTURES SHALL BE HOLOPHANE GRANVILLE PREMIER II LED, MODEL # GPD 80 5K AS M B 5 N S Z H PCS OR APPROVED EQUAL.

2' BANNER ARMS AND DUPLEX RECEPTACLES SHALL BE INSTALLED ON LIGHT POLES. PAYMENT SUBS. TO LIGHT POLE INSTALLATION. SEE SHEET 26 FOR DETAILS.

ELECTRICAL NOTES:

CONDUIT SHALL BE 2" SCHEDULE 40 PVC CONDUIT WITH #8 AWG THWN OR APPROVED EQUAL.

ALL WIRE SHALL HAVE XHHN INSULATION 90° RATING WITH COPPER CONDUCTORS.

CONNECTING TO EXISTING ELECTRICAL SERVICE

BREAKERS AND/ OR OTHER MATERIALS REQUIRED TO CONNECT TO SERVICES ARE SUBSIDIARY TO THIS ITEM.

CONCRETE SIDEWALK

CONTRACTOR SHALL CONSTRUCT NEW SIDEWALK NEXT TO SAW CUT EDGE WITH INSTALLATION OF EXPANSION JOINT IN BETWEEN. EXPANSION JOINTS SHALL BE PLACED BETWEEN HISTORIC BUILDINGS AND NEW SIDEWALKS.

CONTRACTOR IS RESPONSIBLE FOR PREVENTING DAMAGE TO HISTORIC BUILDINGS DURING THE ENTIRE CONSTRUCTION PROJECT, ESPECIALLY DURING REMOVAL OF EXISITNG PAVEMENT, CURB, OR SIDEWALK. DURING THE SAW CUT AND HAND REMOVAL PROCESS, CONTRACTOR TO ENSURE PROTECTION OF HISTORIC BUILDING FOUNDATION, MATERIALS, ELEVATIONS, AND ENTRYWAYS WITH DECORATIVE FLOORING.

ALL SIDEWALK & DRIVEWAYS WITH ACCESSIBLE PATHS SHALL HAVE A MAXIMUM CROSS SLOPE OF 2% OR 1:48.

CONCRETE SIDEWALK SHALL BE CLASS A REINFORCED WITH 6X6X10 WWM OR NO. 3 BARS SPACED AT 18" C-C.

PROVIDE EXPANSION JOINTS AT ALL RADIUS POINTS & GROOVE JOINTS AT A MAXIMUM SPACING OF 10' UNLESS OTHERWISE SHOWN IN PLANS. CONSTRUCTION OR EXPANSION JOINT MUST BE PROVIDED AT THE END OF EACH DAY'S POUR.

SOD

BERMUDA SOD SHALL BE INSTALLED AS REQUIRED AT ALL DISTURBED AREAS

CONCRETE PAVERS

CONCRETE PAVERS SHALL BE PAVESTONE HOLLAND STONE PARKWAY SERIES OR APPROVED EQUAL. THICKNESS OF PAVERS SHALL BE 2 3/8" MINIMUM.

PAVERS TO BE USED IN SIDEWALKS SHALL NOT HAVE TRUNCATED DOMES.

ACCESSIBLE RAMPS & PARKING

RAMPS SHALL NOT HAVE A SLOPE GREATER THAN A 1:12.
RAMPS LONGER THAN 6-FT SHALL HAVE HANDRAILS ON BOTH SIDES. SEE DETAIL SHEETS FOR RAMP DETAILS.

SIDEWALK FURNITURE - ADDITIVE ALTERNATE NO. 1 & 2

BENCHES AND TRASH RECEPTACLES SHALL BE 6' KEYSTONE RIDGE PULLMAN MODEL #P26 IN BLACK OR APPROVED EQUAL. SIDEWALK FURNITURE SHALL BE INSTALLED PER MANUFACTURER'S RECOMMENDATIONS. ALL LOCATIONS SHALL BE FIELD DETERMINED.

BENCHES & TRASH RECEPTACLES IN FRONT OF THE PEROT THEATRE SHALL BE KEYSTONE RIDGE 6' LAMPLIGHTER WITH BACK OR APPROVED EQUAL.

2 BLACK KEYSTONE RIDGE PULLMAN BIKE RACKS (OR APPROVED EQUAL) SHALL BE INSTALLED AT THE ARTS PARK AT BROAD AND TEXAS. EXACT LOCATION TO BE DETERMINED BY ENGINEER.

SIDEWALK SLOT DRAINS

SIDEWALK DRAINS SHALL BE NEENAH R-4995-B2 WITH TYPE 'D' SOLID SLIP RESISTANT COVER OR APPROVED EQUAL. INSTALLATION SHALL FOLLOW MANUFACTURER'S RECOMENDATIONS.

DRAINS ARE AVAILABLE IN 4-FT SECTIONS AND MAY REQUIRE ADJUSTMENTS FOR PROPER INSTALLATION.

REUSE OF EXISTING SIDEWALK DRAINS IS SUBSIDIARY TO SIDEWALK PLACEMENT.

CONCRETE & BRICK SIDEWALK REMOVAL

TO MINIMIZE DAMAGE TO HISTORIC BUILDINGS, CONTRACTOR SHALL SAW CUT EXISTING SIDEWALK 8-12 INCHES AWAY FROM STRUCTURE. CONTRACTOR SHALL ALSO SAW CUT ROADWAY ADJACENT TO CURB TO REMOVE AND INSTALL CURB. ALL SAWCUTTING IS SUBSIDIARY TO ROW PREP.

THE REMAINING CONCRETE ADJACENT TO THE STRUCTURE SHALL BE REMOVED BY HAND.

EXISTING LIGHT POLE FOUNDATIONS SHALL BE REMOVED TO 1-FT BELOW FINISHED GRADE AND ARE TO BE PAID FOR UNDER ROW PREP.

REMOVAL OF SIGN FOUNDATIONS SHALL BE PAID FOR UNDER ROW PREP. SIGNS WILL BE REMOVED BY THE CITY.

REMOVAL OF SIDEWALK DRAINS AND SLOT DRAINS SHALL BE SUBSIDIARY TO ROW PREP.

DRIVEWAY/ ALLEY REPLACEMENT

EXISTING ALLEYS AND DRIVEWAYS TO BE REPLACED ARE TO BE SAWCUT & REMOVED.

TECHNICAL SPECIFICATIONS:

TECHNICAL SPECIFICATIONS ARE LOCATED IN THE 2004 EDITION OF THE TEXAS DEPARTMENT OF TRANSPORTATION'S STANDARD SPECIFICATIONS FOR CONSTRUCTION OF HIGHWAYS, STREETS, AND BRIDGES. THESE SPECIFICATIONS MAY BE FOUND ON TxDOT'S WEBSITE.

REMOVE & RELOCATE EXISTING TREES & GRATES

REDBUD TREES (CERCIS CANADENSIS) SHALL BE PLANTED AT THE LOCATIONS OF THE TREES TO BE REMOVED AND SHALL BE SUBSIDIARY TO THIS ITEM. MINIMUM HEIGHT SHALL BE 6-FT. TREES SHALL BE PROVIDED IN NURSERY GROWN CONTAINERS AND SHALL BE MAINTAINED THROUGH THE DURATION OF THE PROJECT. STUMPS OF EXISTING TREES SHALL BE GROUND. USE EXTREME CARE NOT TO DAMAGE TREES THAT ARE REMAINING.

TREES & SHRUBS LESS THAN 5" IN DIAMETER ARE SUBSIDIARY TO ROW PREP.

EXACT LOCATION OF TREES SHALL BE FIELD DETERMINED.

TEMPORARY ACCESS

TEMPORARY ACCESS SHALL BE PROVIDED & MAINTAINED TO ALL BUSINESS ENTRANCES DURING CONSTRUCTION.

SIGNS

CONTRACTOR SHALL INSTALL A 4" SCH 40 PVC SLEEVE IN THE SIDEWALK AT SIGN LOCATIONS. SIGNS WILL BE INSTALLED BY OTHERS.

DRILLED SHAFT FOUNDATIONS

SEE PAGE 26 FOR DETAILS. DRILLED SHAFTS ARE TO BE USED FOR LIGHT POLE FOUNDATIONS. FOUNDATIONS SHALL BE 6' DEEP (TYP).

DEMO ITEMS

DEMOLITION ITEMS SHALL BE DISPOSED OF OFF SITE IN ACCORDANCE WITH LOCAL AND STATE REGULATIONS.

ALL EXCESS DEBRIS SHALL BE HAULED OFF SITE AND DISPOSED OF. PAYMENT SUBSIDIARY TO REMOVAL ITEM.

TRAFFIC HANDLING

ALL BARRICADE AND SIGN PLACEMENT SHALL BE IN COMPLIANCE WITH THE TEXAS MUTCD AND BC, STANDARDS AND SHALL BE SUBSIDIARY TO TRAFFIC CONTROL.

ROCK CURB, MARBLE PANEL, & BRICK REMOVAL

ROCK CURBS, MARBLE PANELS & BRICKS SHALL BE SALVAGED AND STOCKPILED AS DIRECTED BY THE CITY OF TEXARKANA. USE CAUTION WHEN REMOVING CURBS TO MINIMIZE DAMAGE. PAYMENT SUBSIDIARY TO ROW PREP.

SWP-3

STORM WATER POLUTION PREVENTION ITEMS SHALL BE MAINTAINED THROUGH OUT PROJECT.

STRAW WATTLES SHALL BE INSTALLED IN FRONT OF ALL INLETS & DRAINS.

CONCRETE PAVEMENT

CONCRETE PAVEMENT SHALL BE CLASS C 6" THICK REINFORCED WITH # 4 BARS @ 18" C-C.

PAVEMENT REPAIR

HMAC PAVEMENT REPAIR QUANTITIES ARE CALCULATED BY ASSUMING A 6" WIDE BY 3" THICK AREA OF REPAIR AT AREAS OF CURB REPLACEMENT ONLY.

STATE OF TEXAS
MASHELL L. DANIEL
108544
REGISTERED
PROFESSIONAL ENGINEER

REVISION	DATE

CITY OF TEXARKANA, TEXAS
220 Texas Blvd., Texarkana, Texas 75501 903-798-3848

PROJECT: STEP
DATE: Apr 22, 2014
DESIGNED BY: MJD
DRAWN BY: MJD
CHECKED BY: BRD
APPROVED BY: BRD

GENERAL NOTES

STEP PROJECT
Dept. of Engineering & Infrastructure
City of Texarkana, Texas

DRAWING

Attachment: Exhibit 'B-1' STEP II Sheets 1-20 (1124 : Res No. 2014 - 067 R STEP Project II Downtown Sidewalk Enhancements DPW 14 - 02)

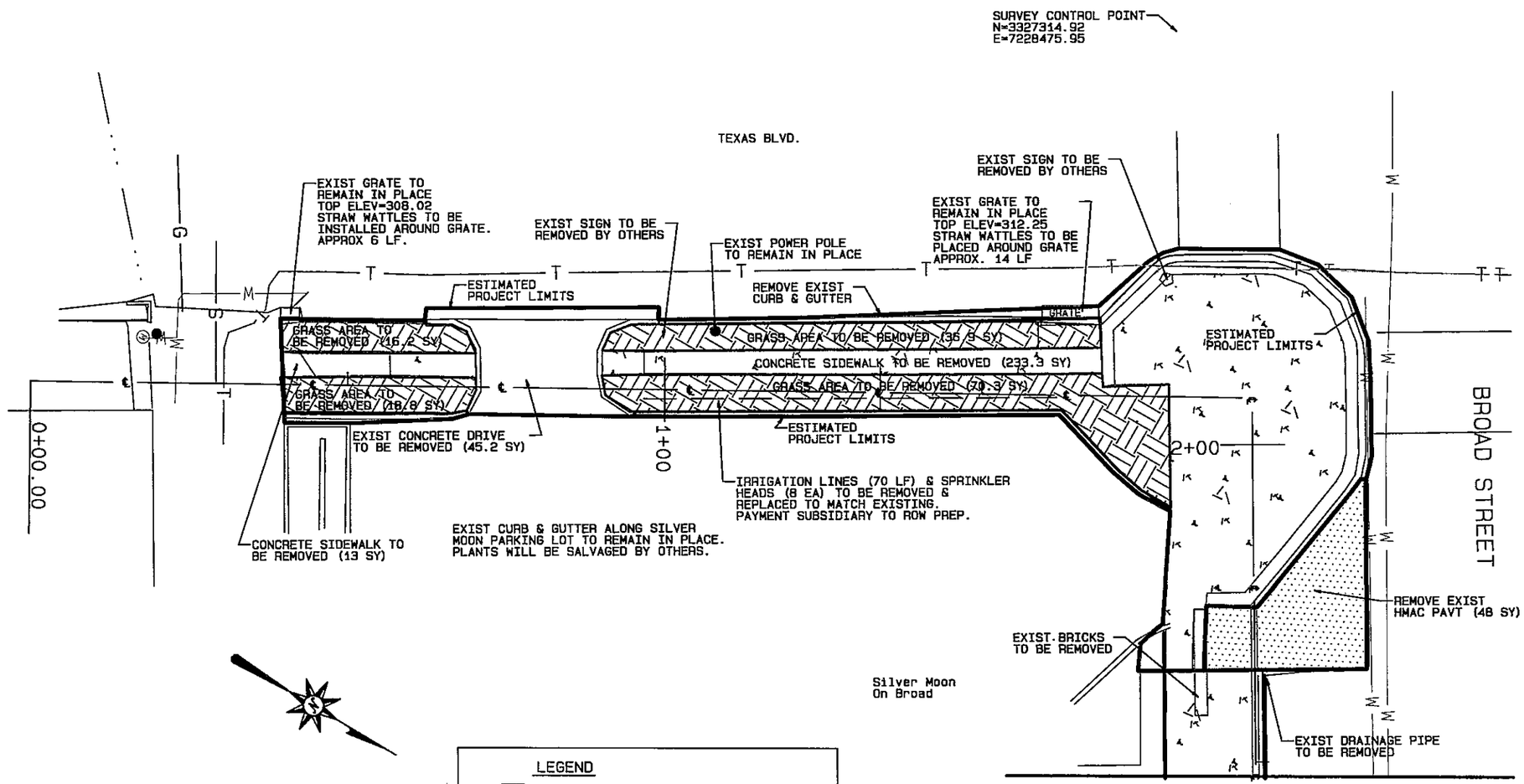

Scale: 1"=20'

LEGEND

- EXIST WATER VALVE
- EXIST LIGHT POLE
- EXIST WATER METER
- EXIST TELEPHONE LINE
- ESTIMATED PROJECT LIMITS
- EXIST WATER LINE
- EXIST GAS LINE
- EXIST ELECTRIC LINE
- EXIST FIRE HYDRANT
- EXIST SEWER LINE
- EXIST POWER POLE

QUANTITY SUMMARY

DESCRIPTION	QTY	UNIT
ROW PREP	2.2	STA
IRRIGATION LINES & SPRINKLER SYSTEM	1	LS

STATE OF TEXAS
MASHELL L. DANIEL
108544
REGISTERED PROFESSIONAL ENGINEER

Mashell L. Daniel
4/22/14

REVISION | DATE

CITY OF TEXARKANA, TEXAS
220 Texas Blvd., Texarkana, Texas 75501 903-798-3940

PROJECT: STEP
DATE: Apr 22, 2014
DESIGNED BY: MLD
DRAWN BY: MLD
CHECK BY: BWD
APPROVED BY: BWD

EXISTING / DEMO
TX BLVD SOUTH

STEP PROJECT
Dept. of Engineering & Infrastructure
City of Texarkana, Texas

DRAWING

Attachment: Exhibit 'B-1' STEP II Sheets 1-20 (1124 : Res No. 2014 - 067 R STEP Project II Downtown Sidewalk Enhancements DPW 14 - 02)

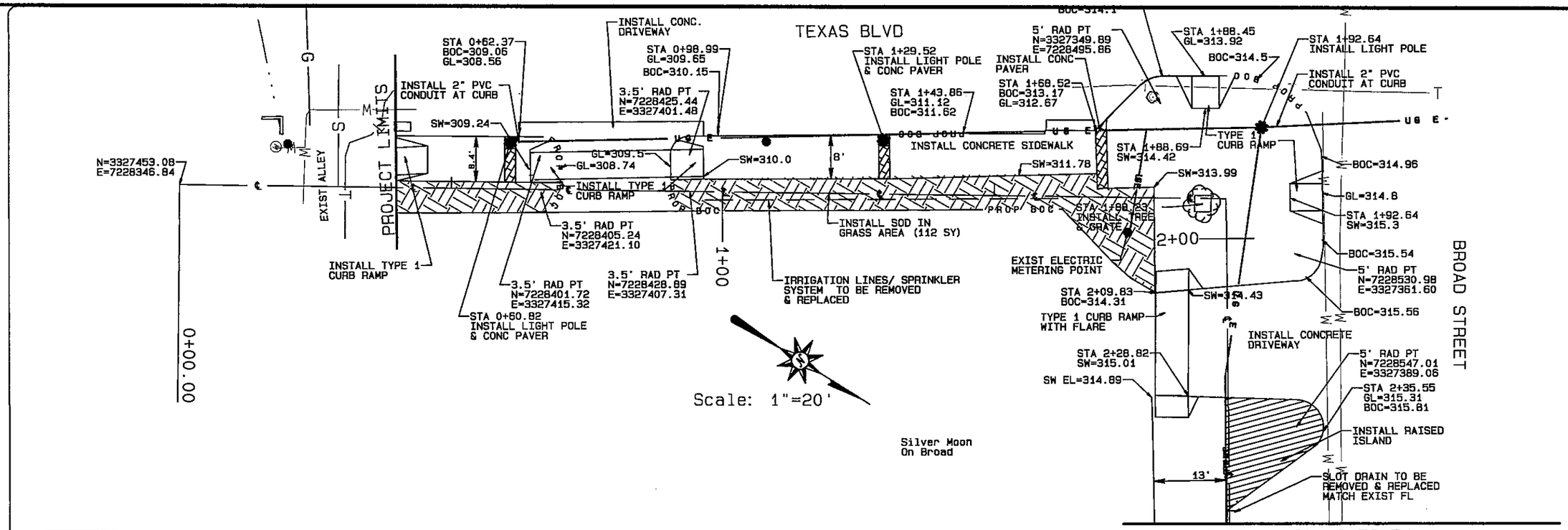

Matchline Sta 2+52.54
See Sheet 7

LEGEND

- ADJUST WATER VALVE
- INSTALL LIGHT POLE
- ADJUST WATER METER
- UGE — PROPOSED UNDERGROUND ELELCTRIC LINE 2" CONDUIT
- T — EXIST TELEPHONE LINE
- W — EXIST WATER LINE
- G — EXIST GAS LINE
- E — EXIST ELECTRIC LINE
- PROP BOC — PROPOSED BACK OF CURB
- EXISTING BACK OF CURB
- EXISTING BUILDING ELEVATIONS/ BACK OF SIDEWALK
- PROPOSED 4" SLEEVE FOR SIGN
- EXIST FIRE HYDRANT TO BE ADJUSTED
- S — EXIST SEWER LINE

PROFILE VIEW:
HORIZ: 1"=20'

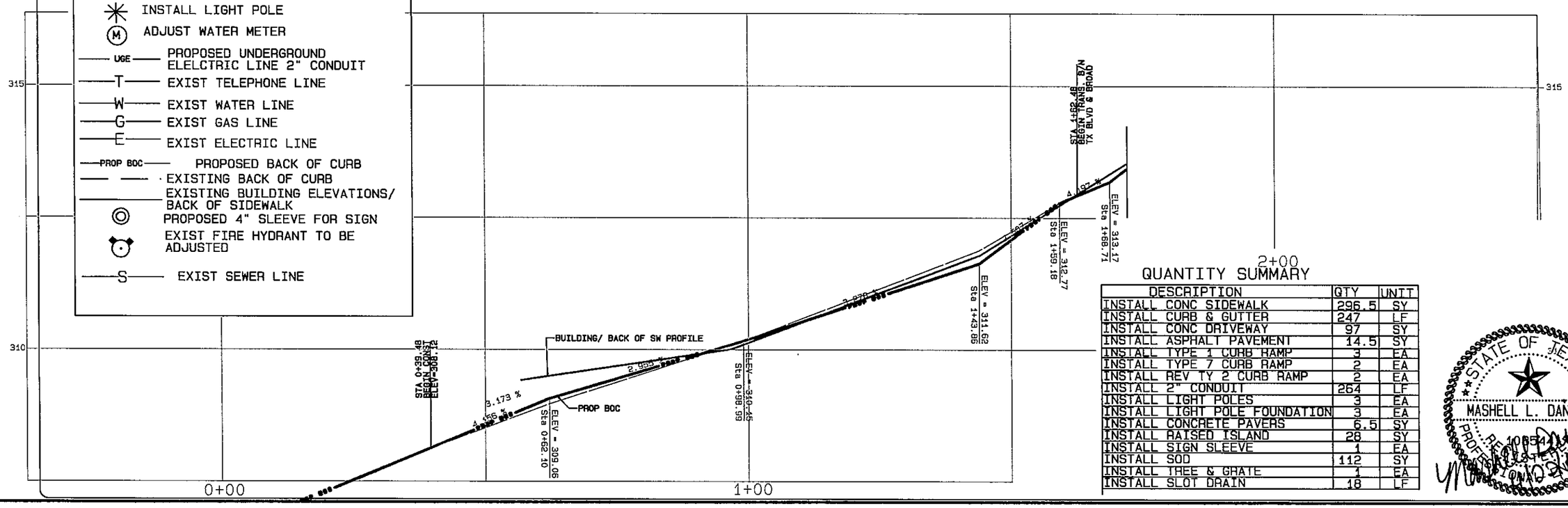

QUANTITY SUMMARY

DESCRIPTION	QTY	UNIT
INSTALL CONC SIDEWALK	296.5	SY
INSTALL CURB & GUTTER	247	LF
INSTALL CONC DRIVEWAY	97	SY
INSTALL ASPHALT PAVEMENT	14.5	SY
INSTALL TYPE 1 CURB RAMP	3	EA
INSTALL TYPE 7 CURB RAMP	2	EA
INSTALL REV TY 2 CURB RAMP	2	EA
INSTALL 2" CONDUIT	264	LF
INSTALL LIGHT POLES	3	EA
INSTALL LIGHT POLE FOUNDATION	3	EA
INSTALL CONCRETE PAVERS	6.5	SY
INSTALL RAISED ISLAND	28	SY
INSTALL SIGN SLEEVE	1	EA
INSTALL SOD	112	SY
INSTALL TREE & GRATE	1	EA
INSTALL SLOT DRAIN	18	LF

STATE OF TEXAS
MASHELL L. DANIEL
PROFESSIONAL ENGINEER

REVISION | DATE

CITY OF TEXARKANA, TEXAS
220 Texas Blvd., Texarkana, Texas 75501 903-798-3948

PROJECT: STEP
DATE: Apr 22, 2014
DESIGNED BY: MLD
DRAWN BY: MLD
CHECKED BY: BRO
APPROVED BY: BRO

PLAN & PROFILE
TX BLVD SOUTH

STEP PROJECT
Dept. of Engineering & Infrastructure
City of Texarkana, Texas

DRAWING

Attachment: Exhibit 'B-1' STEP II Sheets 1-20 (1124 : Res No. 2014 - 067 R STEP Project II Downtown Sidewalk Enhancements DPW 14 - 02)

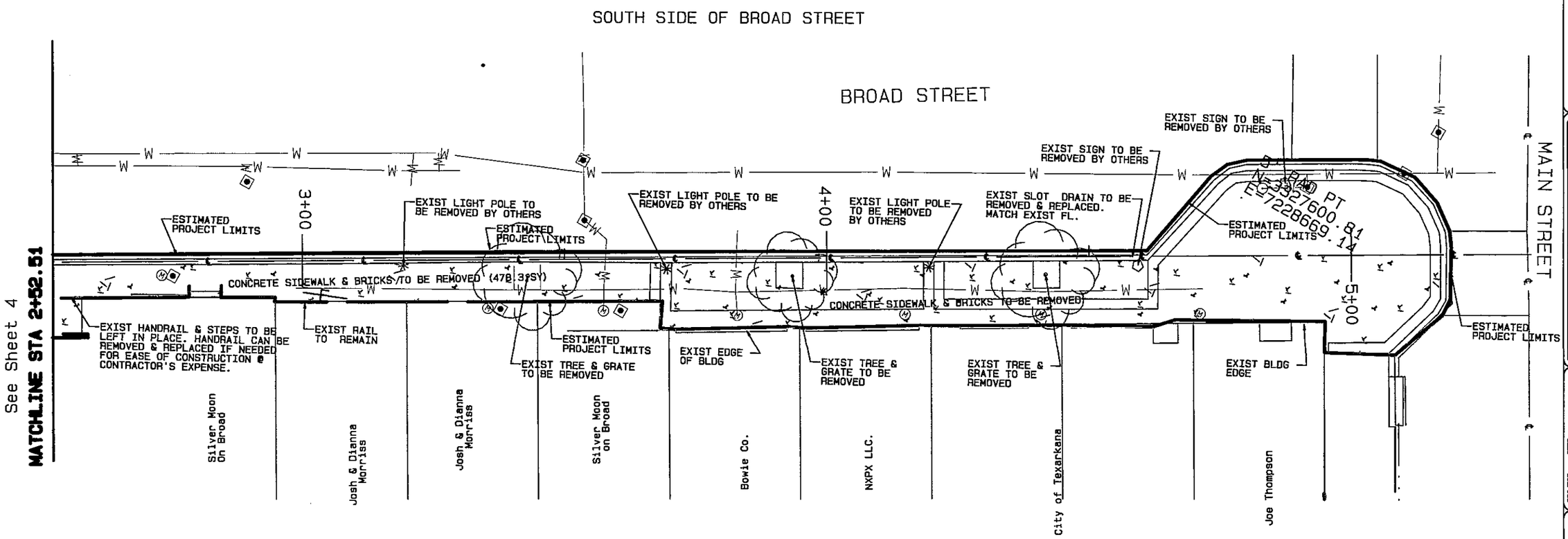

QUANTITY SUMMARY

DESCRIPTION	QTY.	UNIT
ROW PREP	2.65	STA
REMOVE LIGHT POLE FOUNDATIONS	2	EA
TREE & GRATE REMOVAL	3	EA

Scale: 1"=20'

LEGEND

- EXIST WATER VALVE
- EXIST LIGHT POLE
- EXIST WATER METER
- EXIST TELEPHONE LINE
- ESTIMATED PROJECT LIMITS
- EXIST WATER LINE
- EXIST GAS LINE
- EXIST ELECTRIC LINE
- EXIST FIRE HYDRANT
- EXIST SEWER LINE
- EXIST POWER POLE

STATE OF TEXAS
MASHELL L. DANIEL
PROFESSIONAL ENGINEER
SIGNATURE

REVISION | DATE

CITY OF TEXARKANA, TEXAS
220 Texas Blvd., Texarkana, Texas 75501 903-798-3648

PROJECT: STEP
DATE: Apr 22, 2014
DESIGNED BY: MLD
DRAWN BY: MLD
CHECKED BY: MLD
APPROVED BY: BRD

EXISTING / DEMO
SOUTH BROAD

STEP PROJECT
Dept. of Engineering & Infrastructure
City of Texarkana, Texas

DRAWING

Attachment: Exhibit 'B-1' STEP II Sheets 1-20 (1124 : Res No. 2014 - 067 R STEP Project II Downtown Sidewalk Enhancements DPW 14 - 02)

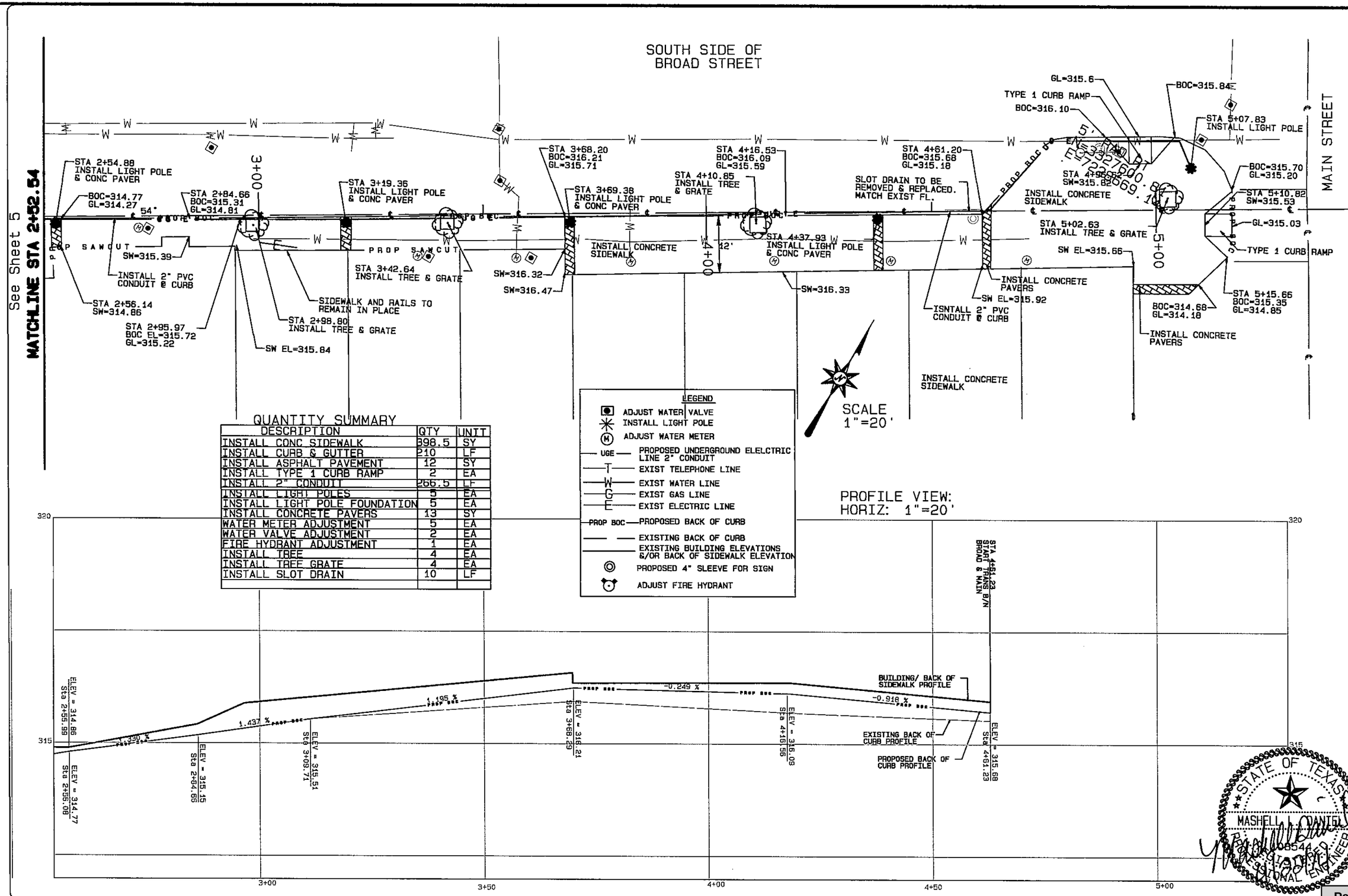

QUANTITY SUMMARY

DESCRIPTION	QTY	UNIT
INSTALL CONC SIDEWALK	398.5	SY
INSTALL CURB & GUTTER	210	LF
INSTALL ASPHALT PAVEMENT	12	SY
INSTALL TYPE 1 CURB RAMP	2	EA
INSTALL 2" CONDUIT	266.5	LF
INSTALL LIGHT POLES	5	EA
INSTALL LIGHT POLE FOUNDATION	5	EA
INSTALL CONCRETE PAVERS	13	SY
WATER METER ADJUSTMENT	5	EA
WATER VALVE ADJUSTMENT	2	EA
FIRE HYDRANT ADJUSTMENT	1	EA
INSTALL TREE	4	EA
INSTALL TREE GRATE	4	EA
INSTALL SLOT DRAIN	10	LF

REVISION | DATE

CITY OF TEXARKANA, TEXAS
220 Texas Blvd., Texarkana, Texas 75501 903-798-3948

PROJECT: STEP
DATE: Apr 22, 2014
DESIGNED BY: MLD
DRAWN BY: MLD
CHECKED BY: BKD
APPROVED BY: BKD

PLAN & PROFILE
SOUTH BROAD ST.

STEP PROJECT
Dept. of Engineering & Infrastructure
City of Texarkana, Texas

DRAWING

Attachment: Exhibit 'B-1' STEP II Sheets 1-20 (1124 : Res No. 2014 - 067 R STEP Project II Downtown Sidewalk Enhancements DPW 14 - 02)

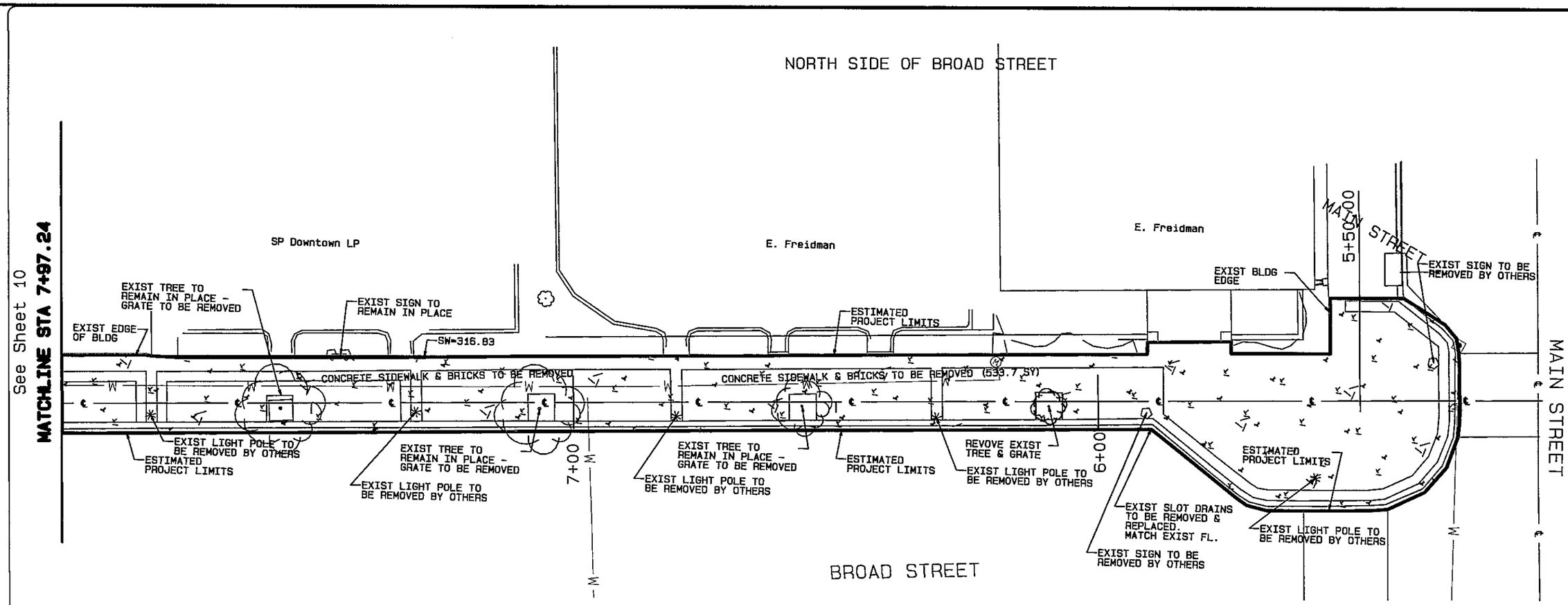

QUANTITY SUMMARY

DESCRIPTION	QTY	UNIT
ROW PREP	2.65	STA
REMOVE TREE GRATES	4	EA
REMOVE TREES	1	EA
REMOVE LIGHT POLE FOUNDATION	5	EA

LEGEND

- EXIST WATER VALVE
- EXIST LIGHT POLE
- EXIST WATER METER
- —T— EXIST TELEPHONE LINE
- ESTIMATED PROJECT LIMITS
- —W— EXIST WATER LINE
- —G— EXIST GAS LINE
- —E— EXIST ELECTRIC LINE
- EXIST FIRE HYDRANT
- —S— EXIST SEWER LINE
- EXIST POWER POLE

Scale: 1"=20'

STATE OF TEXAS
MASHELL L. DANIEL
PROFESSIONAL ENGINEER

REVISION | DATE

CITY OF TEXARKANA, TEXAS
220 Texas Blvd., Texarkana, Texas 75501 903-798-3848

PROJECT: STEP
DATE: Apr 22, 2014
DESIGNED BY: NLO
DRAWN BY: NLO
CHECKED BY: BWD
APPROVED BY: BWD

EXISTING / DEMO
NORTH BROAD

STEP PROJECT
Dept. of Engineering & Infrastructure
City of Texarkana, Texas

DRAWING

Attachment: Exhibit 'B-1' STEP II Sheets 1-20 (1124 : Res No. 2014 - 067 R STEP Project II Downtown Sidewalk Enhancements DPW 14 - 02)

QUANTITY SUMMARY

DESCRIPTION	QTY	UNIT
INSTALL CONC SIDEWALK	950	SY
INSTALL CURB & GUTTER	310.5	LF
INSTALL ASPHALT PAVEMENT	17.5	SY
INSTALL TYPE 1 CURB RAMP	2	EA
INSTALL 2" CONDUIT	270.5	LF
INSTALL LIGHT POLES	5	EA
INSTALL LIGHT POLE FOUNDATION	5	EA
INSTALL CONCRETE PAVERS	16	SY
WATER METER ADJUSTMENT	1	EA
INSTALL TREE	2	EA
INSTALL TREE GRATE	5	EA
INSTALL SLOT DRAIN	8	LF
INSTALL SIGN SLEEVE	2	EA

LEGEND

- ADJUST WATER VALVE
- INSTALL LIGHT POLE
- ADJUST WATER METER
- UGE — PROPOSED UNDERGROUND ELELCTRIC LINE 2" CONDUIT
- T — EXIST TELEPHONE LINE
- W — EXIST WATER LINE
- G — EXIST GAS LINE
- E — EXIST ELECTRIC LINE
- PROP BOC — PROPOSED BACK OF CURB
- EXISTING BACK OF CURB
- EXISTING BUILDING ELEVATIONS &/OR BACK OF SIDEWALK ELEVATION
- PROP 4" SLEEVE FOR SIGN
- ADJUST FIRE HYDRANT

Scale: 1"=20'

NORTH SIDE OF BROAD STREET

See Sheet 11

MATCHLINE STA 7+97.21

SW=316.4

INSTALL CONCRETE SIDEWALK

STA 7+55.65 EXIST TREE TO REMAIN IN PLACE INSTALL GRATE

12'

SW=316.83

STA 7+06.46 EXIST TREE TO REMAIN IN PLACE REPLACE GRATE

SW=316.85

STA 6+56.41 EXIST TREE TO REMAIN IN PLACE REPLACE GRATE

12'

SW=316.65

STA 6+09.38 INSTALL TREE & GRATE

INSTALL CONCRETE PAVERS

STA 7+74.71 BOC=316.15 GL=315.65

STA 7+81.44 INSTALL LIGHT POLE & CONC PAVER

INSTALL 2" PVC CONDUIT @ CURB

STA 7+26.88 GL=316.09 BOC=316.59

STA 7+29.96 INSTALL LIGHT POLE & CONC PAVER

7+00

STA 6+80.47 INSTALL LIGHT POLE & CONC PAVER

STA 6+83.27 BOC=316.60 GL= 316.10

STA 6+31.76 INSTALL LIGHT POLE & CONC PAVER

STA 6+33.68 BOC=316.39 GL=315.89

INSTALL 2" PVC CONDUIT AT CURB

EXIST SLOT DRAIN TO BE REMOVED & REPLACED. MATCH EXIST FL.

6+00

INSTALL CONCRETE PAVERS

BOC=316.94 GL= 316.41

SW EL=316.83

STA 5+39.01 SW EL=316.68

STA 5+50 INSTALL TREE & GRATE

SW EL=316.93

GL EL=316.18

TYPE 1 CURB RAMP

INSTALL CONCRETE SIDEWALK

STA 5+28.33 INSTALL LIGHT POLE

STA 5+52.91 EL=316.65

BOC=316.69

GL=316.18

BOC=316.65

GL=316.16

TYPE 1 CURB RAMP

MAIN STREET

PROFILE VIEW:
HORIZ: 1"=20'
VERT: 1"=2'

320

315

BUILDING/ BACK OF SIDEWALK PROFILE

ELEV = 316.15 Sta 5+55.79

ELEV = 315.80 Sta 5+33.38

1.562 %

0.910 %

PROPOSED BACK OF CURB PROFILE

EXISTING BACK OF CURB PROFILE

ELEV = 316.52 Sta 6+03.70

0.023 %

ELEV = 316.60 Sta 6+16.64

-0.418 %

ELEV = 316.39 Sta 6+95.63

1.278 %

ELEV = 316.65 Sta 7+17.18

7+50

7+00

6+50

6+00

5+50

STATE OF TEXAS
MASHELL DANIEL
108544
REGISTERED
PROFESSIONAL ENGINEER

REVISION	DATE

CITY OF TEXARKANA, TEXAS
220 Texas Blvd., Texarkana, Texas 75501 903-798-3948

PROJECT: STEP
DATE: Apr 22, 2014
DESIGNED BY: MJD
DRAWN BY: MJD
CHECKED BY: BRD
APPROVED BY: BRD

PLAN & PROFILE
NORTH BROAD ST.

STEP PROJECT
Dept. of Engineering & Infrastructure
City of Texarkana, Texas

DRAWING

Attachment: Exhibit 'B-1' STEP II Sheets 1-20 (1124 : Res No. 2014 - 067 R STEP Project II Downtown Sidewalk Enhancements DPW 14 - 02)

LEGEND

- EXIST WATER VALVE
- EXIST LIGHT POLE
- EXIST WATER METER
- —T— EXIST TELEPHONE LINE
- ESTIMATED PROJECT LIMITS
- —W— EXIST WATER LINE
- —G— EXIST GAS LINE
- —E— EXIST ELECTRIC LINE
- EXIST FIRE HYDRANT
- —S— EXIST SEWER LINE
- EXIST POWER POLE

Scale: 1"=20'

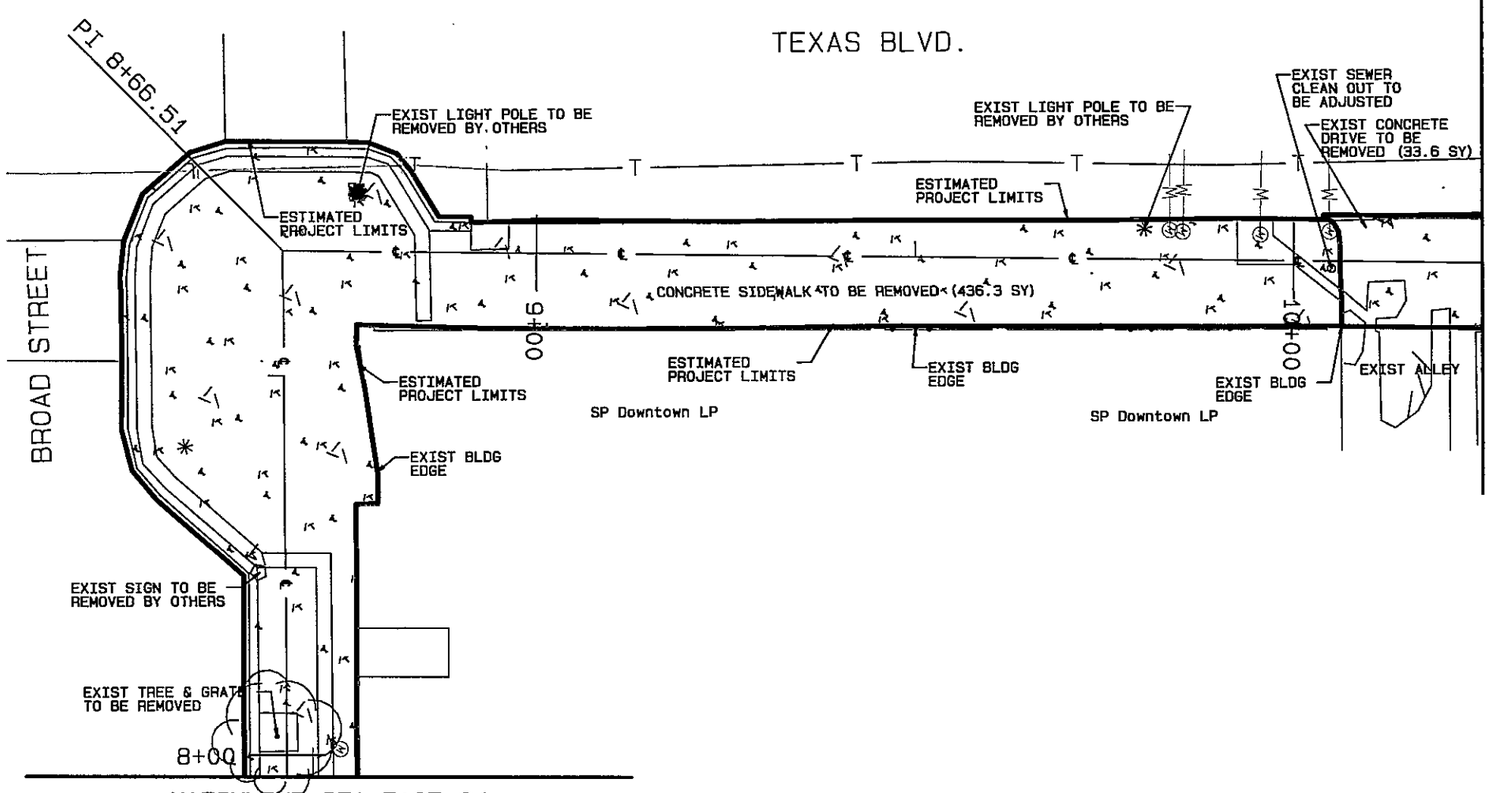

QUANTITY SUMMARY

DESCRIPTION	QTY.	UNIT
ROW PREP	2.3	STA
REMOVE TREE GRATES	1	EA
REMOVE TREES	1	EA
REMOVE LIGHT POLE FOUNDATION	2	EA

STATE OF TEXAS
MASHEAL U. HAMEL
1985
REGISTERED
PROFESSIONAL ENGINEER
1/22/15

REVISION | DATE

CITY OF TEXARKANA, TEXAS
820 Texas Blvd., Texarkana, Texas 75501 903-798-3848

PROJECT: STEP
DATE: Apr 22, 2014
DESIGNED BY: MJD
DRAWN BY: MJD
CHECKED BY: BWD
APPROVED BY: BWD

EXISTING / DEMO
BROAD & TX BLVD

STEP PROJECT
Dept. of Engineering & Infrastructure
City of Texarkana, Texas

DRAWING

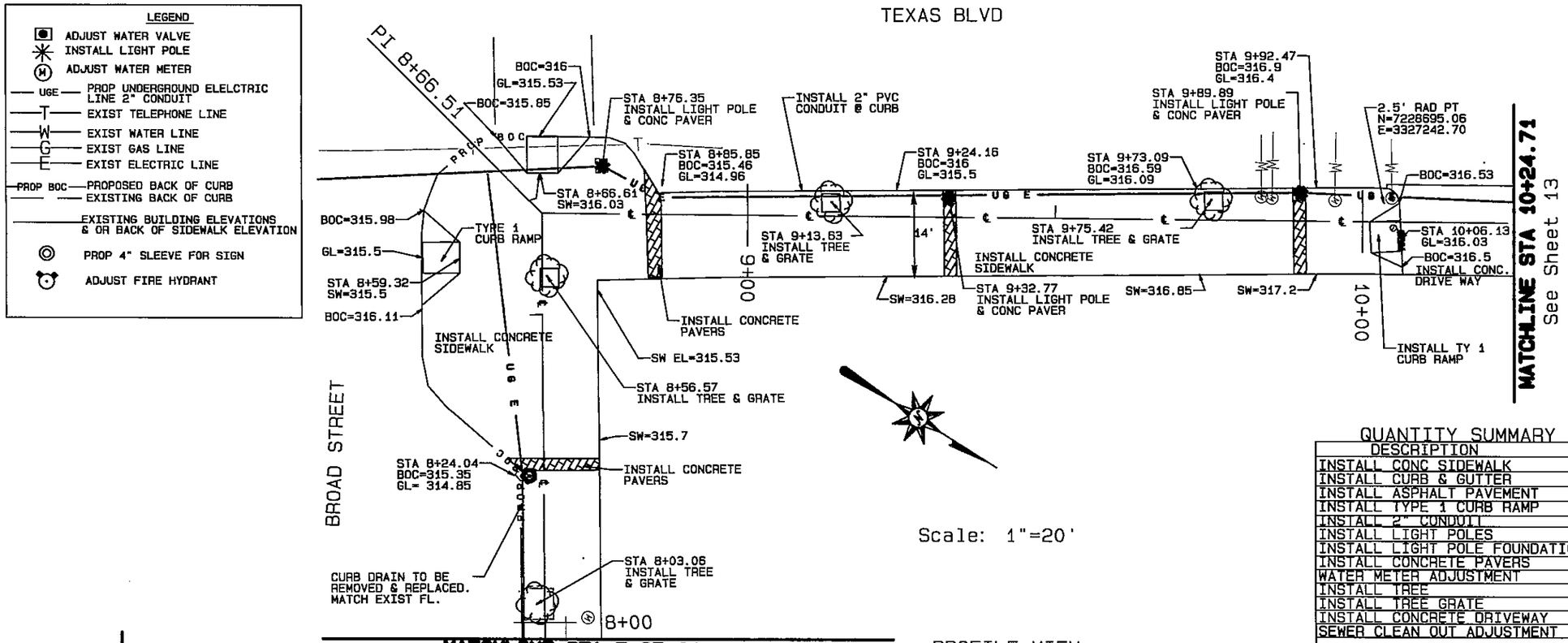

QUANTITY SUMMARY

DESCRIPTION	QTY	UNIT
INSTALL CONC SIDEWALK	392	SY
INSTALL CURB & GUTTER	247	LF
INSTALL ASPHALT PAVEMENT	14	SY
INSTALL TYPE 1 CURB RAMP	3	EA
INSTALL 2" CONDUIT	396	LF
INSTALL LIGHT POLES	3	EA
INSTALL LIGHT POLE FOUNDATION	3	EA
INSTALL CONCRETE PAVERS	12.5	SY
WATER METER ADJUSTMENT	5	EA
INSTALL TREE	4	EA
INSTALL TREE GRATE	4	EA
INSTALL CONCRETE DRIVEWAY	29.5	SY
SEWER CLEAN OUT ADJUSTMENT	1	EA

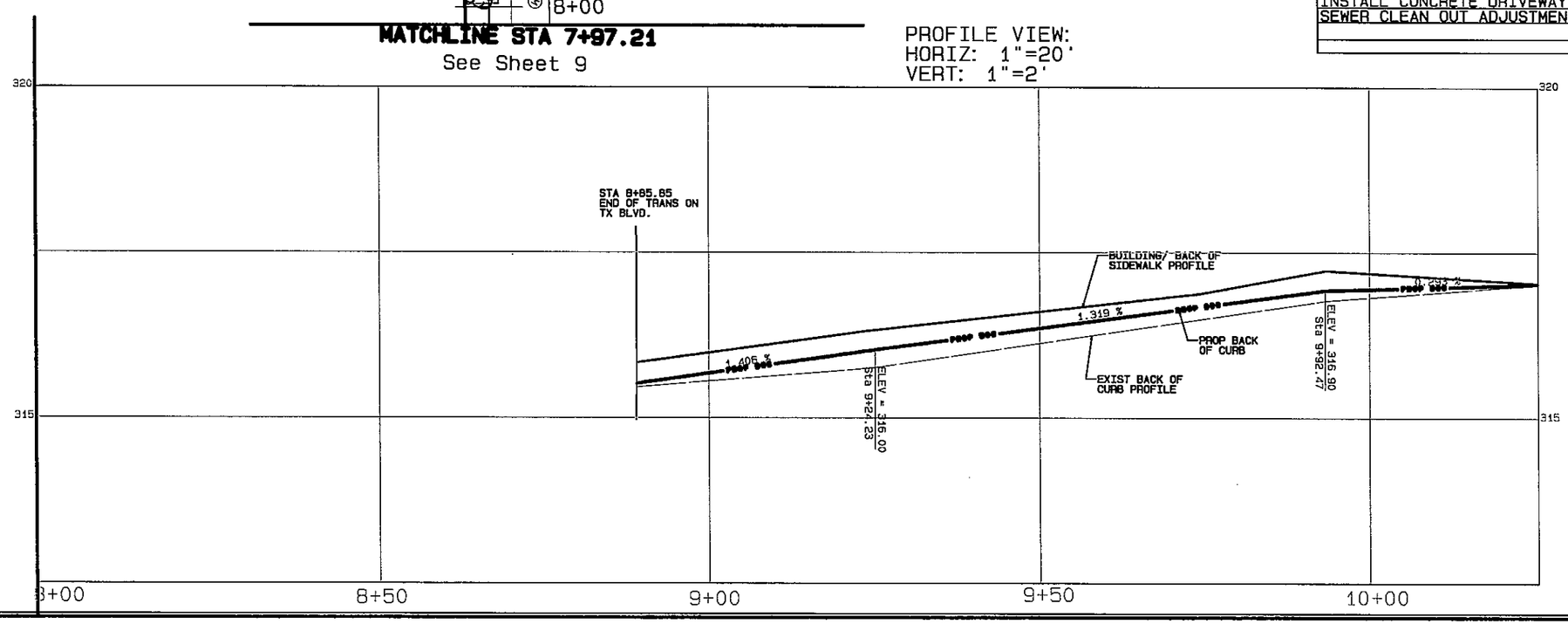

REVISION | DATE

CITY OF TEXARKANA, TEXAS
220 Texas Blvd., Texarkana, Texas 75501 903-798-3848

PROJECT: STEP
DATE: Apr 22, 2014
DESIGNED BY: NLD
DRAWN BY: NLD
CHECKED BY: BKD
APPROVED BY: BKD

PLAN/ PROFILE
BROAD & TX BLVD

STEP PROJECT
Dept. of Engineering & Infrastructure
City of Texarkana, Texas

DRAWING

Attachment: Exhibit 'B-1' STEP II Sheets 1-20 (1124 : Res No. 2014 - 067 R STEP Project II Downtown Sidewalk Enhancements DPW 14 - 02)

LEGEND

- EXIST WATER VALVE
- EXIST LIGHT POLE
- EXIST WATER METER
- EXIST TELEPHONE LINE
- ESTIMATED PROJECT LIMITS
- EXIST WATER LINE
- EXIST GAS LINE
- EXIST ELECTRIC LINE
- EXIST FIRE HYDRANT
- EXIST SEWER LINE
- EXIST POWER POLE

SURVEY CONTROL POINT
N=3327145.34
E=7228739.17

Scale: 1"=20'

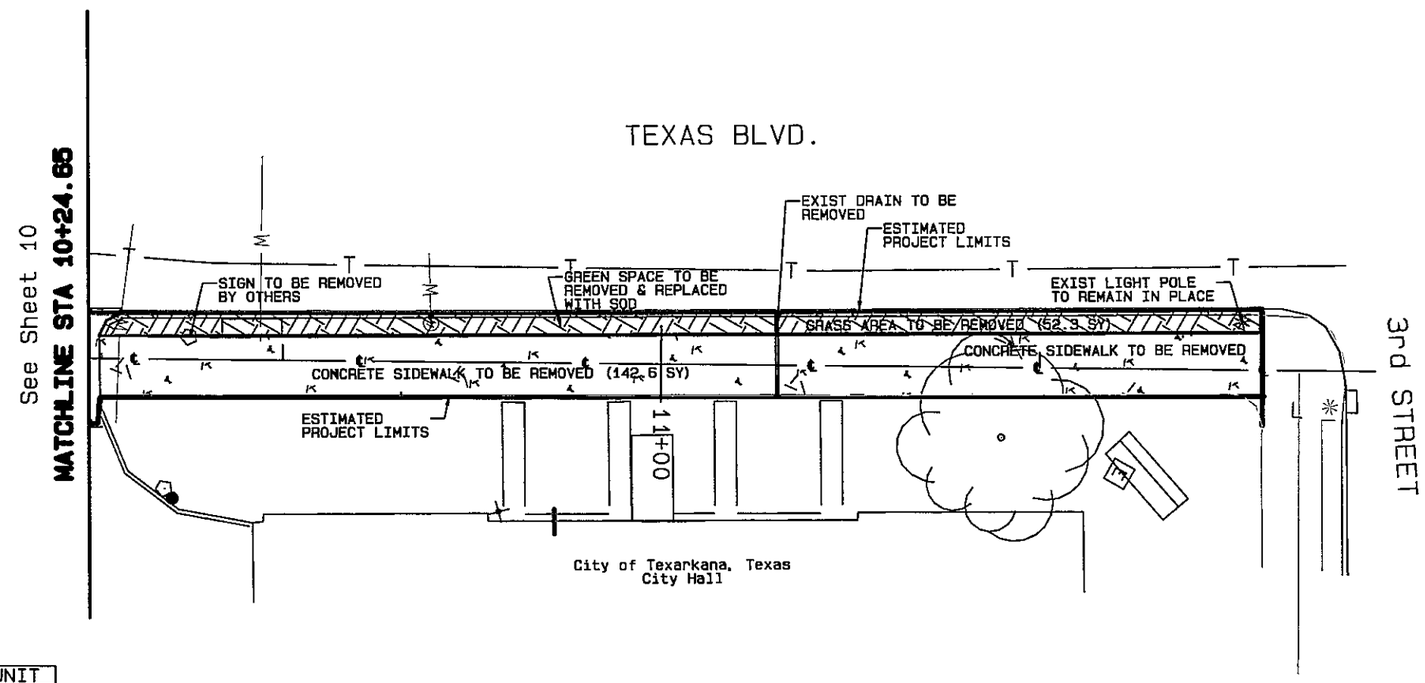

QUANTITY SUMMARY

DESCRIPTION	QTY	UNIT
ROW PREP	1.53	STA

STATE OF TEXAS
MASHELL A. DANIEL
068941
REGISTERED
PROFESSIONAL ENGINEER

REVISION | DATE

CITY OF TEXARKANA, TEXAS
220 Texas Blvd., Texarkana, Texas 75501 903-798-3948

PROJECT: STEP
DATE: Apr 22, 2014
DESIGNED BY: MLD
DRAWN BY: MLD
CHECKED BY: BWD
APPROVED BY: BWD

EXISTING / DEMO
TX BLVD

STEP PROJECT
Dept. of Engineering & Infrastructure
City of Texarkana, Texas

DRAWING

Attachment: Exhibit 'B-1' STEP II Sheets 1-20 (1124 : Res No. 2014 - 067 R STEP Project II Downtown Sidewalk Enhancements DPW 14 - 02)

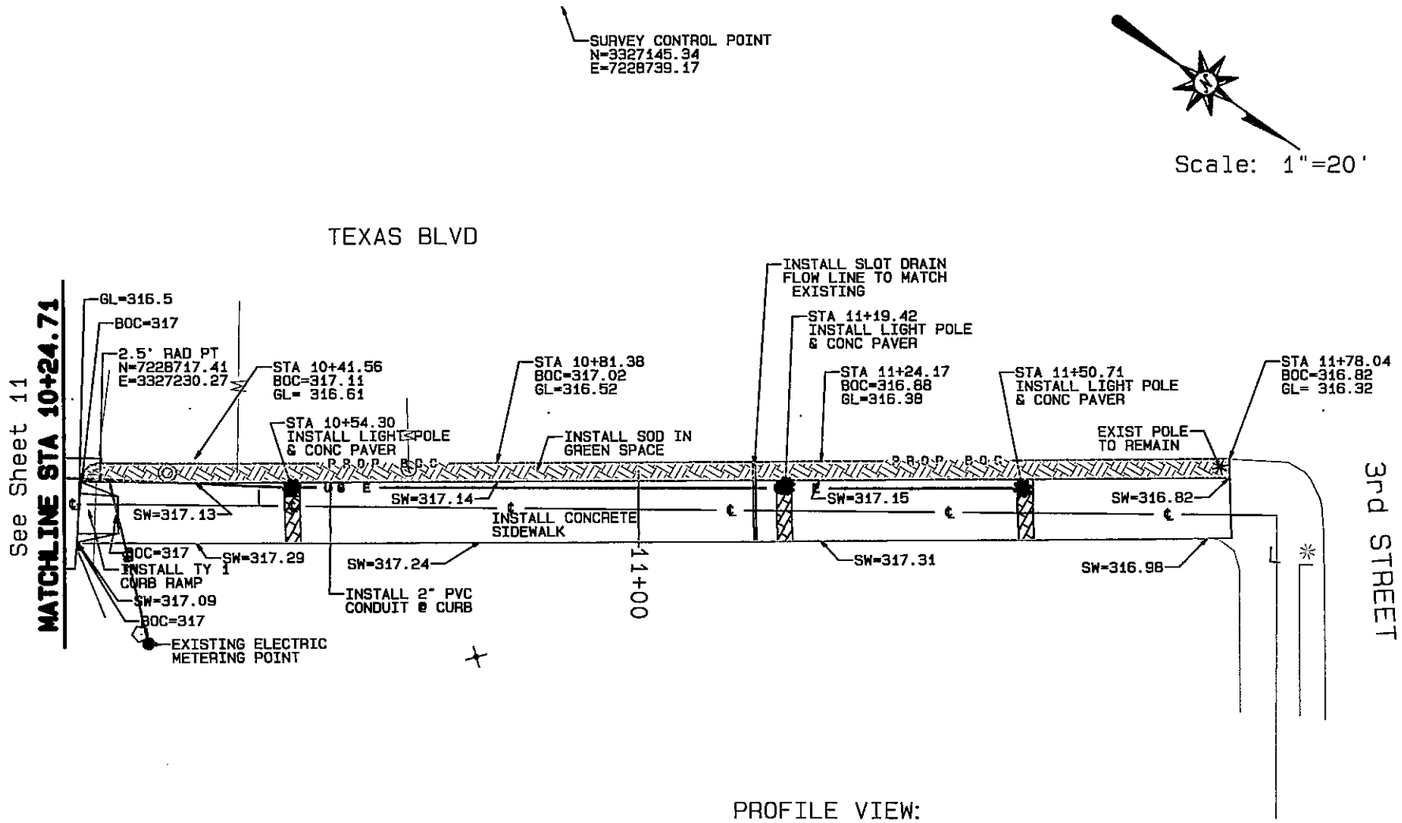

LEGEND

- ADJUST WATER VALVE
- INSTALL LIGHT POLE
- ADJUST WATER METER
- UGE — PROP UNDERGROUND ELELCTRIC LINE 2" CONDUIT
- T — EXIST TELEPHONE LINE
- W — EXIST WATER LINE
- G — EXIST GAS LINE
- E — EXIST ELECTRIC LINE
- PROP BOC — PROPOSED BACK OF CURB
- EXISTING BACK OF CURB
- EXISTING BUILDING ELEVATIONS &/OR BACK OF SIDEWALK ELEVATION
- PROP 4" SLEEVE FOR SIGN
- EXIST FIRE HYDRANT

QUANTITY SUMMARY

DESCRIPTION	QTY	UNIT
INSTALL CONC SIDEWALK	126.5	SY
INSTALL CURB & GUTTER	147	LF
INSTALL ASPHALT PAVEMENT	8	SY
INSTALL TYPE 1 CURB RAMP	1	EA
INSTALL 2" CONDUIT	126	LF
INSTALL LIGHT POLES	3	EA
INSTALL LIGHT POLE FOUNDATION	3	EA
INSTALL CONCRETE PAVERS	4	SY
WATER METER ADJUSTMENT	1	EA
INSTALL CONCRETE DRIVEWAY	4	SY
INSTALL SIGN SLEEVE	1	EA
INSTALL SLOT DRAIN	10.5	LF
INSTALL SOD	41	SY

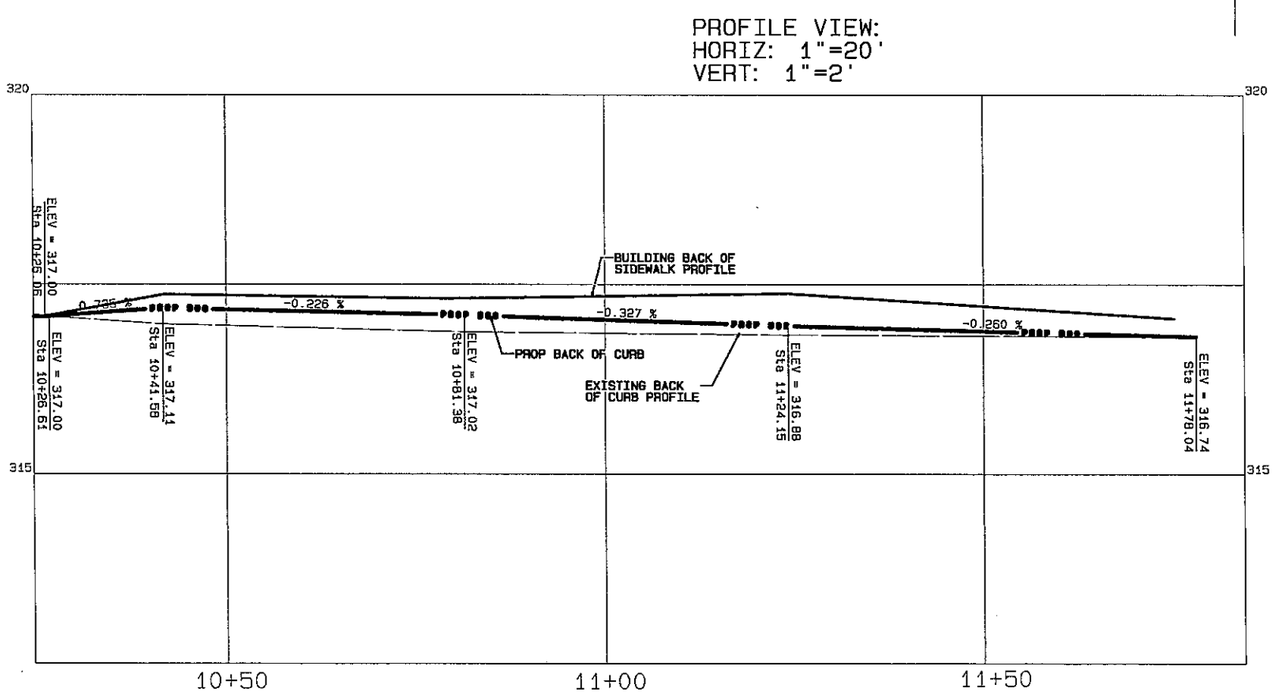

REVISION | DATE

CITY OF TEXARKANA, TEXAS
220 Texas Blvd., Texarkana, Texas 75501 903-798-3948

PROJECT: STEP
DATE: Apr 22, 2014
DESIGNED BY: MLO
DRAWN BY: MLO
CHECKED BY: BWD
APPROVED BY: BWD

PLAN & PROFILE
TX BLVD

STEP PROJECT
Dept. of Engineering & Infrastructure
City of Texarkana, Texas

DRAWING

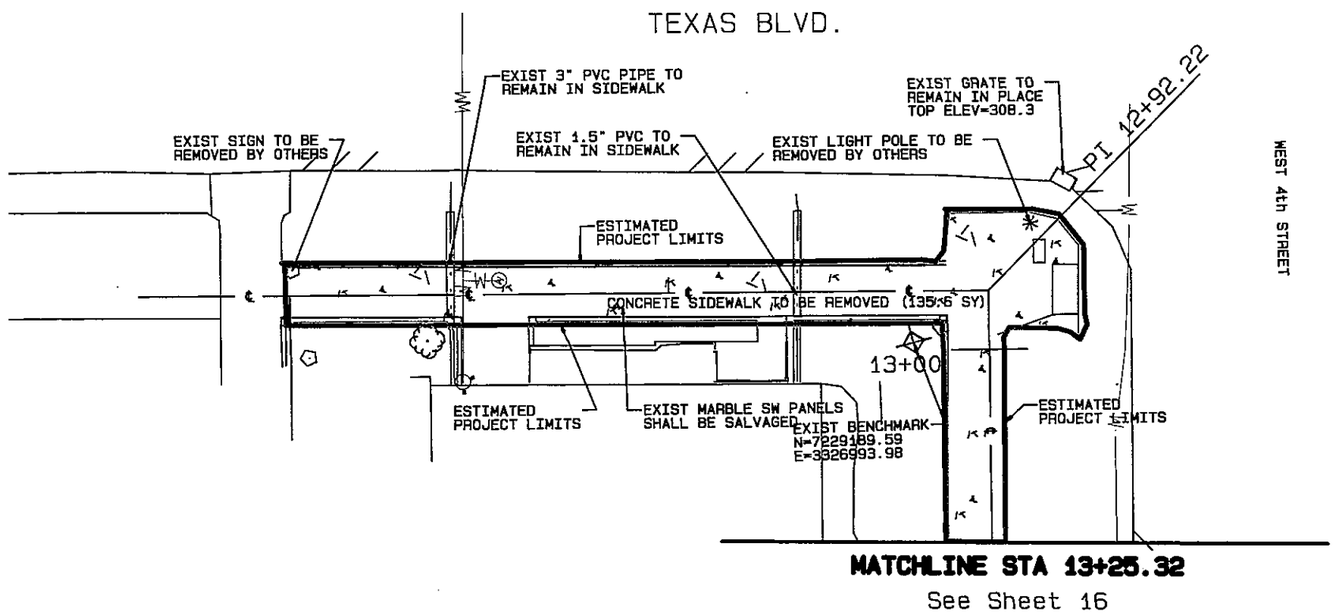

QUANTITY SUMMARY

DESCRIPTION	QTY.	UNIT
ROW PREP	1.3	STA

Scale: 1"=20'

LEGEND

- EXIST WATER VALVE
- EXIST LIGHT POLE
- EXIST WATER METER
- —T— EXIST TELEPHONE LINE
- ESTIMATED PROJECT LIMITS
- —W— EXIST WATER LINE
- —G— EXIST GAS LINE
- —E— EXIST ELECTRIC LINE
- EXIST FIRE HYDRANT
- —S— EXIST SEWER LINE
- EXIST POWER POLE

REVISION | DATE

CITY OF TEXARKANA, TEXAS
220 Texas Blvd., Texarkana, Texas 75501 903-798-3948

PROJECT: STEP
DATE: Apr 28, 2014
DESIGNED BY: MJD
DRAWN BY: MJD
CHECKED BY: BKD
APPROVED BY: BKD

EXISTING / DEMO
TX BLVD & 4TH STREET

STEP PROJECT
Dept. of Engineering & Infrastructure
City of Texarkana, Texas

DRAWING

Attachment: Exhibit 'B-1' STEP II Sheets 1-20 (1124 : Res No. 2014 - 067 R STEP Project II Downtown Sidewalk Enhancements DPW 14 - 02)

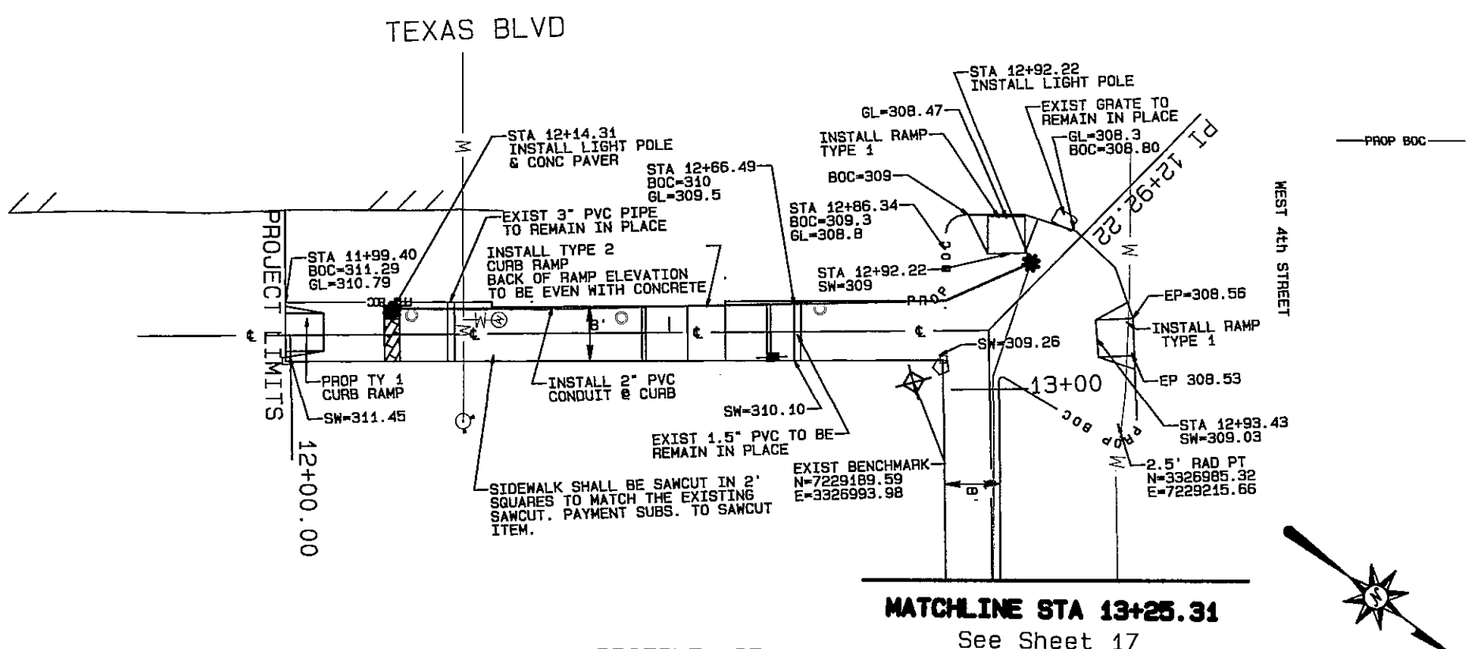

MATCHLINE STA 13+25.31

See Sheet 17

PROFILE VIEW:
HORIZ: 1"=20'

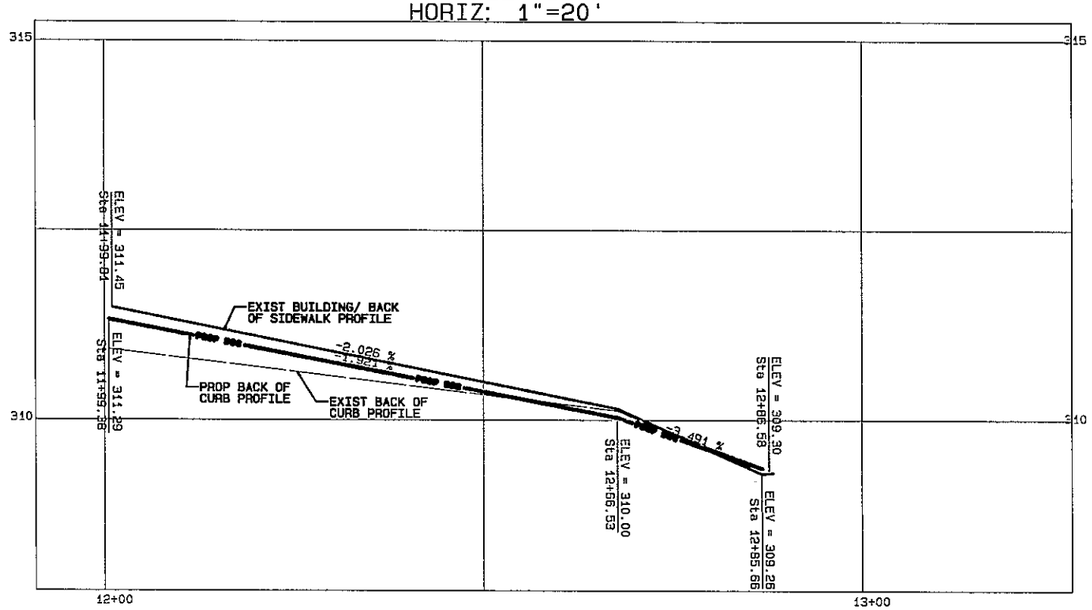

Scale: 1"=20'

LEGEND

- ADJUST WATER VALVE
- INSTALL LIGHT POLE
- ADJUST WATER METER
- UGE — PROP UNDERGROUND ELELCTRIC LINE 2" CONDUIT
- T — EXIST TELEPHONE LINE
- W — EXIST WATER LINE
- G — EXIST GAS LINE
- E — EXIST ELECTRIC LINE
- PROPOSED BACK OF CURB
- EXISTING BACK OF CURB
- EXISTING BUILDING ELEVATIONS &/OR BACK OF SIDEWALK ELEVATION
- PROP 4" SLEEVE FOR SIGN
- EXIST FIRE HYDRANT TO BE ADJUSTED

QUANTITY SUMMARY

DESCRIPTION	QTY	UNIT
INSTALL CONC SIDEWALK	136.5	SY
INSTALL CURB & GUTTER	162	LF
INSTALL ASPHALT PAVEMENT	9	SY
INSTALL TYPE 1 CURB RAMP	4	EA
INSTALL 2" CONDUIT	128	LF
INSTALL LIGHT POLES	2	EA
INSTALL LIGHT POLE FOUNDATION	2	EA
INSTALL CONCRETE PAVERS	1.5	SY
WATER METER ADJUSTMENT	1	EA
INSTALL SIGN SLEEVE	3	EA
SAWCUT SIDEWALK	405	LF

STATE OF TEXAS
MARSHALL D. DANIEL
108411
REGISTERED
PROFESSIONAL ENGINEER

REVISION | DATE

CITY OF TEXARKANA, TEXAS
220 Texas Blvd., Texarkana, Texas 75501 903-798-3946

PROJECT: STEP
DATE: Apr 28, 2014
DESIGNED BY: MJD
DRAWN BY: MJD
CHECKED BY: BKD
APPROVED BY: BKD

PLAN & PROFILE
TX BLVD & 4TH ST

STEP PROJECT
Dept. of Engineering & Infrastructure
City of Texarkana, Texas

DRAWING
15

Attachment: Exhibit 'B-1' STEP II Sheets 1-20 (1124 : Res No. 2014 - 067 R STEP Project II Downtown Sidewalk Enhancements DPW 14 - 02)

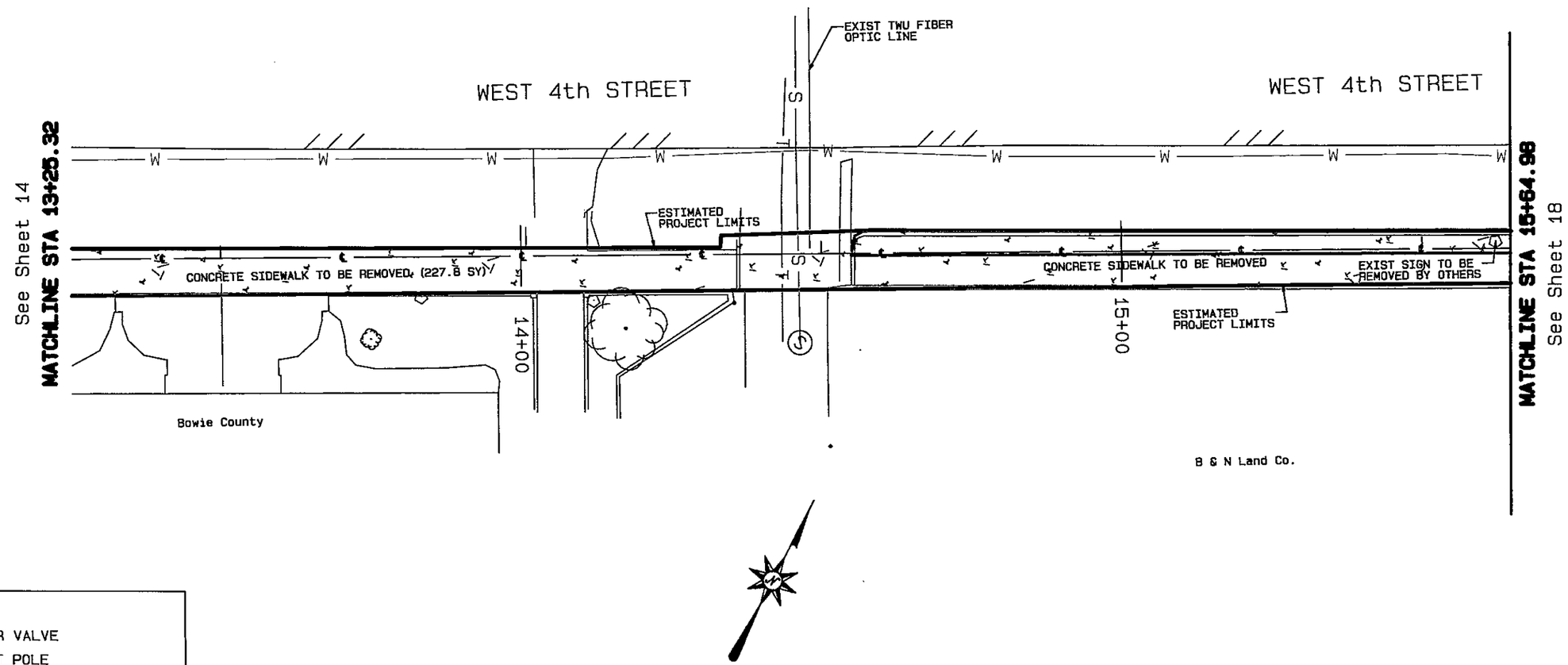

LEGEND

- EXIST WATER VALVE
- EXIST LIGHT POLE
- EXIST WATER METER
- EXIST TELEPHONE LINE
- ESTIMATED PROJECT LIMITS
- EXIST WATER LINE
- EXIST GAS LINE
- EXIST ELECTRIC LINE
- EXIST FIRE HYDRANT
- EXIST SEWER LINE
- EXIST POWER POLE

Scale: 1"=20'

QUANTITY SUMMARY

DESCRIPTION	QTY	UNIT
ROW PREP	2.4	STA

STATE OF TEXAS
MICHAEL L. DANIEL
108544
REGISTERED PROFESSIONAL ENGINEER
4/29/14

REVISION | DATE

CITY OF TEXARKANA, TEXAS
220 Texas Blvd., Texarkana, Texas 75501 903-798-3948

PROJECT: STEP
DATE: Apr 29, 2014
DESIGNED BY: MLD
DRAWN BY: MLD
CHECKED BY: BRD
APPROVED BY: BRD

EXISTING / DEMO
4TH STREET

STEP PROJECT
Dept. of Engineering & Infrastructure
City of Texarkana, Texas

DRAWING

Attachment: Exhibit 'B-1' STEP II Sheets 1-20 (1124 : Res No. 2014 - 067 R STEP Project II Downtown Sidewalk Enhancements DPW 14 - 02)

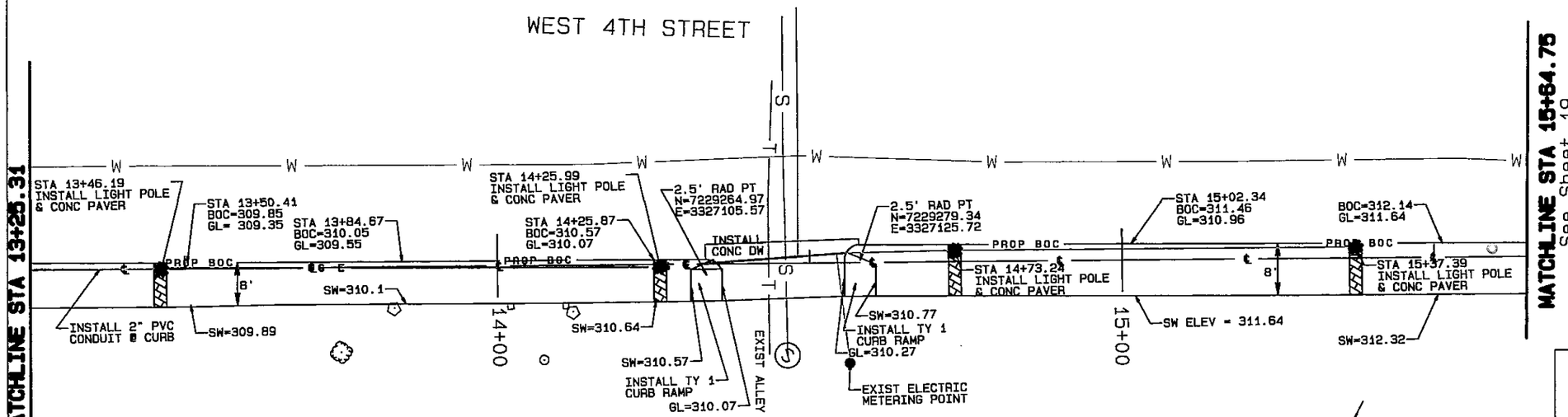

TRAHC Building

PROFILE VIEW:
HORIZ: 1"=20'

Scale: 1"=20'

QUANTITY SUMMARY

DESCRIPTION	QTY	UNIT
INSTALL CONC SIDEWALK	186	SY
INSTALL CURB & GUTTER	212	LF
INSTALL ASPHALT PAVEMENT	13.5	SY
INSTALL TYPE 2 CURB RAMP	2	EA
INSTALL 2" CONDUIT	240	LF
INSTALL LIGHT POLES	4	EA
INSTALL LIGHT POLE FOUNDATION	4	EA
INSTALL CONCRETE PAVERS	2.5	SY
INSTALL SIGN SLEEVE	1	EA
INSTALL CONCRETE DRIVEWAY	21.2	SY

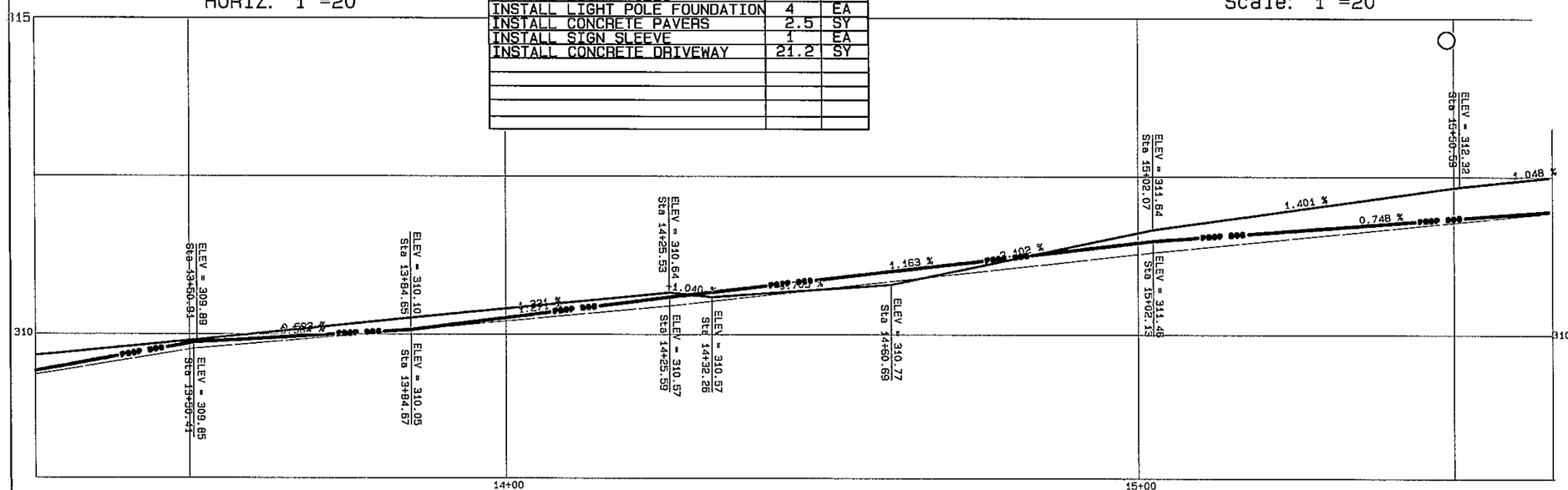

LEGEND

- ADJUST WATER VALVE
- INSTALL LIGHT POLE
- ADJUST WATER METER
- UGE — PROP UNDERGROUND ELELCTRIC LINE 2" CONDUIT
- T — EXIST TELEPHONE LINE
- W — EXIST WATER LINE
- G — EXIST GAS LINE
- E — EXIST ELECTRIC LINE
- PROP BOC — PROPOSED BACK OF CURB
- EXISTING BACK OF CURB
- EXISTING BUILDING ELEVATIONS &/OR BACK OF SIDEWALK ELEVATION
- PROP 4" SLEEVE FOR SIGN
- EXIST FIRE HYDRANT TO BE ADJUSTED
- S — EXIST SEWER LINE
- EXIST MAN HOLE

STATE OF TEXAS
MASHEL L. DANIEL
108544
REGISTERED
PROFESSIONAL ENGINEER
10-20-2014

REVISION | DATE

CITY OF TEXARKANA, TEXAS
220 Texas Blvd., Texarkana, Texas 75501 903-798-3848

PROJECT: STEP
DATE: Apr 22, 2014
DESIGNED BY: MLD
DRAWN BY: MLD
CHECKED BY: BWD
APPROVED BY: BWD

PLAN & PROFILE
4TH STREET

STEP PROJECT
Dept. of Engineering & Infrastructure
City of Texarkana, Texas

DRAWING

Attachment: Exhibit 'B-1' STEP II Sheets 1-20 (1124 : Res No. 2014 - 067 R STEP Project II Downtown Sidewalk Enhancements DPW 14 - 02)

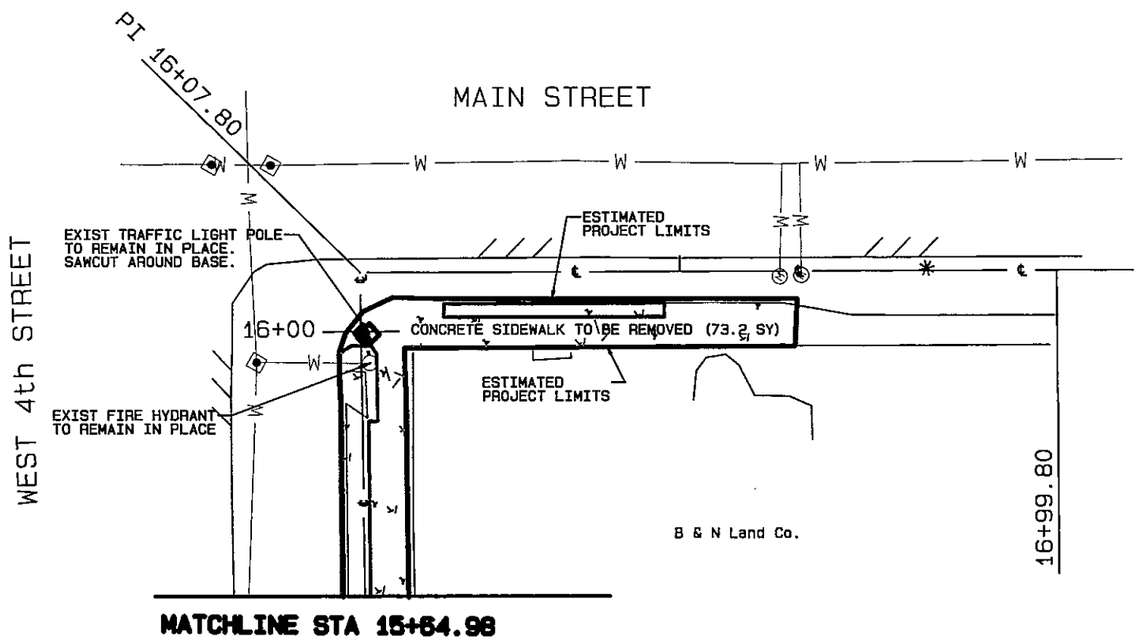

LEGEND

- EXIST WATER VALVE
- EXIST LIGHT POLE
- EXIST WATER METER
- EXIST TELEPHONE LINE
- ESTIMATED PROJECT LIMITS
- EXIST WATER LINE
- EXIST GAS LINE
- EXIST ELECTRIC LINE
- EXIST FIRE HYDRANT
- EXIST SEWER LINE
- EXIST POWER POLE

QUANTITY SUMMARY

DESCRIPTION	QTY	UNIT
ROW PREP	1	STA

Scale: 1"=20'

STATE OF TEXAS
MARSHALL DANIEL
REGISTERED
PROFESSIONAL ENGINEER

REVISION | DATE

CITY OF TEXARKANA, TEXAS
220 Texas Blvd., Texarkana, Texas 75501 903-798-3848

PROJECT: STEP
DATE: Apr 28, 2014
DESIGNED BY: MLD
DRAWN BY: MLD
CHECKED BY: BRO
APPROVED BY: BRO

EXISTING / DEMO
4TH & MAIN

STEP PROJECT
Dept. of Engineering & Infrastructure
City of Texarkana, Texas

DRAWING

Attachment: Exhibit 'B-1' STEP II Sheets 1-20 (1124 : Res No. 2014 - 067 R STEP Project II Downtown Sidewalk Enhancements DPW 14 - 02)

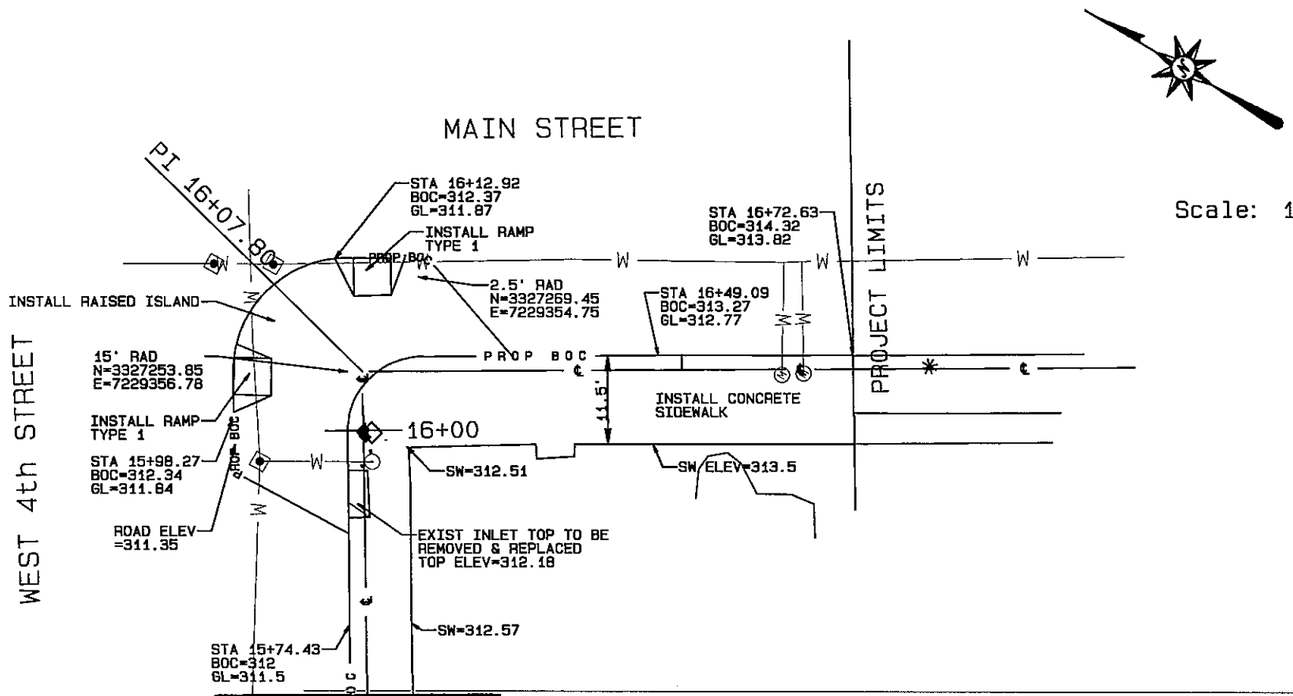

Scale: 1"=20'

LEGEND

- ADJUST WATER VALVE
- INSTALL LIGHT POLE
- ADJUST WATER METER
- UGE — PROP UNDERGROUND ELELCTRIC LINE 2" CONDUIT
- T — EXIST TELEPHONE LINE
- W — EXIST WATER LINE
- G — EXIST GAS LINE
- E — EXIST ELECTRIC LINE
- PROP BOC — PROPOSED BACK OF CURB
- EXISTING BACK OF CURB
- EXISTING BUILDING ELEVATIONS
- PROP 4" SLEEVE FOR SIGN
- EXIST FIRE HYDRANT TO BE ADJUSTED

QUANTITY SUMMARY

DESCRIPTION	QTY	UNIT
INSTALL CONC SIDEWALK	111	SY
INSTALL CURB & GUTTER	148	LF
INSTALL ASPHALT PAVEMENT	8.5	SY
INSTALL TYPE 1 CURB RAMP	2	EA
INSTALL RAISED ISLAND	67	SY
WATER METER ADJUSTMENT	2	EA
FIRE HYDRANT ADJUSTMENT	1	EA
WATER VALVE ADJUSTMENT	1	EA

MATCHLINE STA 15+64.75

See Sheet 17

PROFILE VIEW:
HORIZ: 1"=20'
VERT: 1"=2'

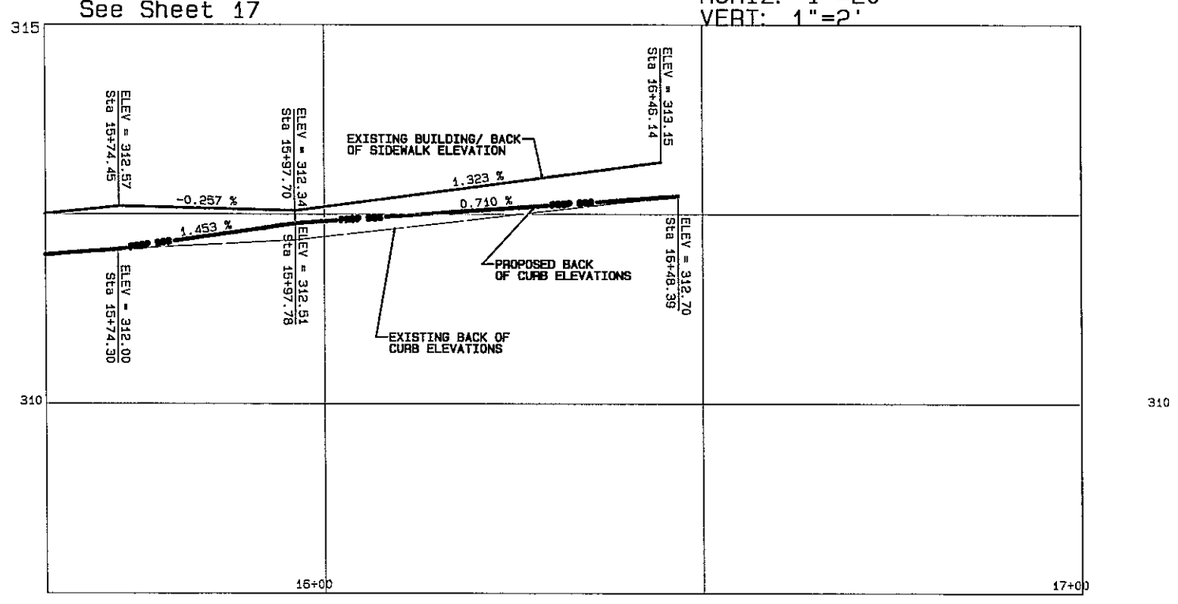

STATE OF TEXAS
MASHEL D. VOORHEES
108541
REGISTERED
PROFESSIONAL ENGINEER
01/07/15

REVISION | DATE

CITY OF TEXARKANA, TEXAS
220 Texas Blvd., Texarkana, Texas 75501 903-798-3948

PROJECT: STEP
DATE: Apr 28, 2014
DESIGNED BY: MJD
DRAWN BY: MJD
CHECKED BY: BRD
APPROVED BY: BRD

PLAN & PROFILE
4TH & MAIN

STEP PROJECT
Dept. of Engineering & Infrastructure
City of Texarkana, Texas

DRAWING

Attachment: Exhibit 'B-1' STEP II Sheets 1-20 (1124 : Res No. 2014 - 067 R STEP Project II Downtown Sidewalk Enhancements DPW 14 - 02)

ADDITIVE ALTERNATE NO. 1

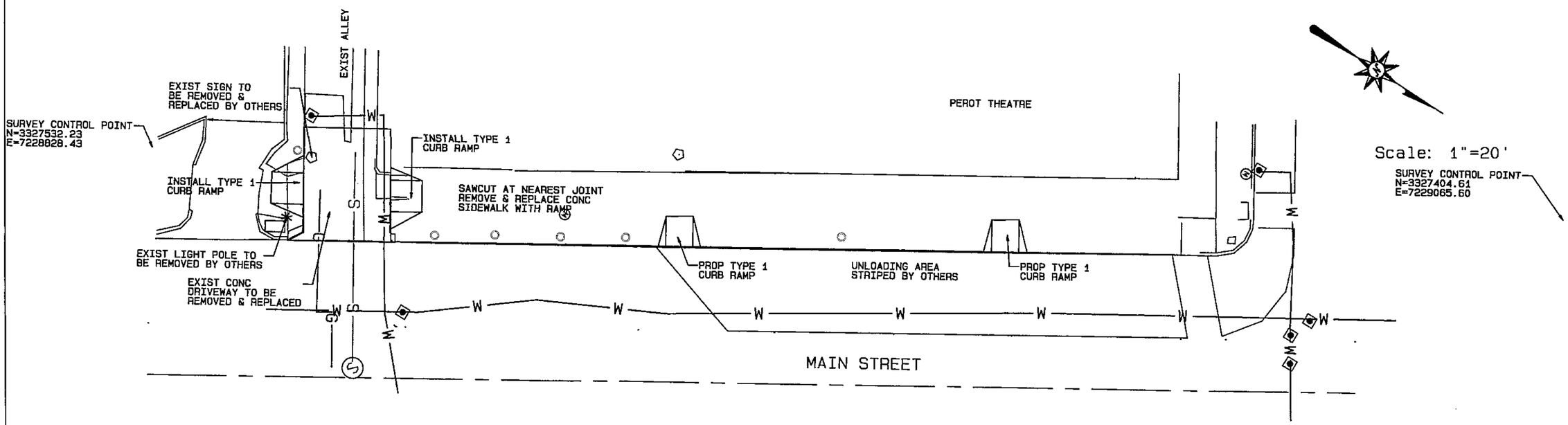

QUANTITY SUMMARY

DESCRIPTION	QTY	UNIT
INSTALL CONC SIDEWALK	14	SY
INSTALL TYPE 1 CURB RAMP	4	EA
INSTALL LIGHT POLES	1	EA
INSTALL LIGHT POLE FOUNDATION	1	EA
INSTALL CONCRETE DRIVEWAY	41	SY
INSTALL SIGN SLEEVE	6	EA
INSTALL BENCHES	2	EA
INSTALL PLANTERS	2	EA

LEGEND

- EXIST WATER VALVE
- INSTALL LIGHT POLE
- EXIST WATER METER
- —UGE— UNDERGROUND ELELCTRIC LINE 2" CONDUIT
- —T— EXIST TELEPHONE LINE
- —W— EXIST WATER LINE
- —G— EXIST GAS LINE
- —E— EXIST ELECTRIC LINE
- —PROP BOC— PROPOSED BACK OF CURB
- — — EXISTING BACK OF CURB
- EXISTING BUILDING ELEVATIONS
- PROP 4" SLEEVE FOR SIGN
- EXIST FIRE HYDRANT TO BE ADJUSTED

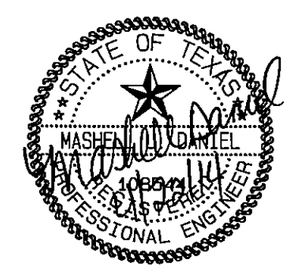

REVISION | DATE

CITY OF TEXARKANA, TEXAS
220 Texas Blvd., Texarkana, Texas 75501 903-798-3948

PROJECT: STEP
DATE: Apr 22, 2014
DESIGNED BY: MLD
DRAWN BY: MLD
CHECKED BY: BKD
APPROVED BY: BKD

PEROT PLAN

STEP PROJECT
Dept. of Engineering & Infrastructure
City of Texarkana, Texas

DRAWING

Attachment: Exhibit 'B-1' STEP II Sheets 1-20 (1124 : Res No. 2014 - 067 R STEP Project II Downtown Sidewalk Enhancements DPW 14 - 02)

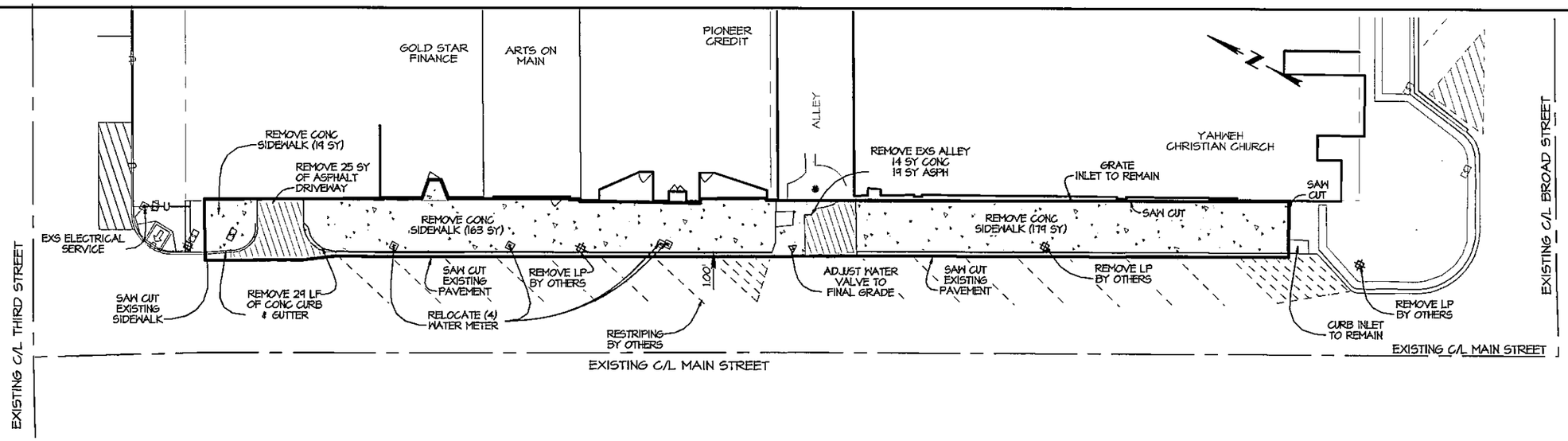

EXISTING CONDITIONS & DEMOLITION

1"=30'

LEGEND

— — —	RIGHT-OF-WAY	W	WATER METER
	ASPHALT OR CONC. PAVEMENT		WATER VALVE
—x—	FENCE LINE		FIRE HYDRANT
—T—	TELEPHONE CABLE		SEWER MANHOLE
—G—	GAS LINE		SIGN
—E—	OVERHEAD ELECTRIC LINE		PROPOSED LIGHT POLE
—U—	UNDERGROUND ELECTRIC LINE		PROPOSED CONC. CURB
	RIGHT-OF-WAY MARKER		EDGE OF PAVEMENT
	POWER POLE	320.00	PROPOSED SPOT ELEVATION
	LIGHT POLE	G	GAS METER

QUANTITY SUMMARY

DESCRIPTION	QTY	UNIT
ROW PREP	2.78	STA
WATER METER ADJUSTMENT	4	EA
WATER VALVE ADJUSTMENT	1	EA

STATE OF TEXAS
KAYLA R. WOOD
104859
REGISTERED
PROFESSIONAL ENGINEER

THE SEAL APPEARING ON THIS DOCUMENT WAS AUTHORIZED BY KAYLA R. WOOD, P.E. 104859 ON 4/24/14. ALTERATION OF A SEALED DOCUMENT WITHOUT PRIOR NOTIFICATION TO THE RESPONSIBLE ENGINEER IS AN OFFENSE UNDER THE TEXAS ENGINEERING PRACTICE ACT.

REVISION	DATE
1	
2	
3	
4	
5	
6	

STEP PROJECT II
DOWNTOWN SIDEWALK ENHANCEMENTS
220 Texas Blvd., Texarkana, Texas 75501 903-798-3940

PROJECT: 139012
DATE: Apr 24, 2014
DESIGNED BY: KAYLA WOOD, PE
DRAWN BY: JEFF DAVIS
CHECKED BY: MASHELL DANIEL, PE
APPROVED BY: KYLE DOOLEY, PE

MTG Engineers & Consultants
5980 SUMERHILL RD. | P.O. BOX 5760
TEXARKANA TEXAS 75501
P 903.838.8281 | F 903.832.4100
www.mtgengineers.com
© MTG 2013 TBPE NO. 3541

SIDEWALK IMPROVEMENTS
MAIN STREET

DRAWING
SHEET 21 OF 9

X:\2013 Projects\138012 Sidewalk Improvements, TXK STEP\05 Engineering Design\Design\Design_06.pro
Thu Apr 24, 2014 8:16AM

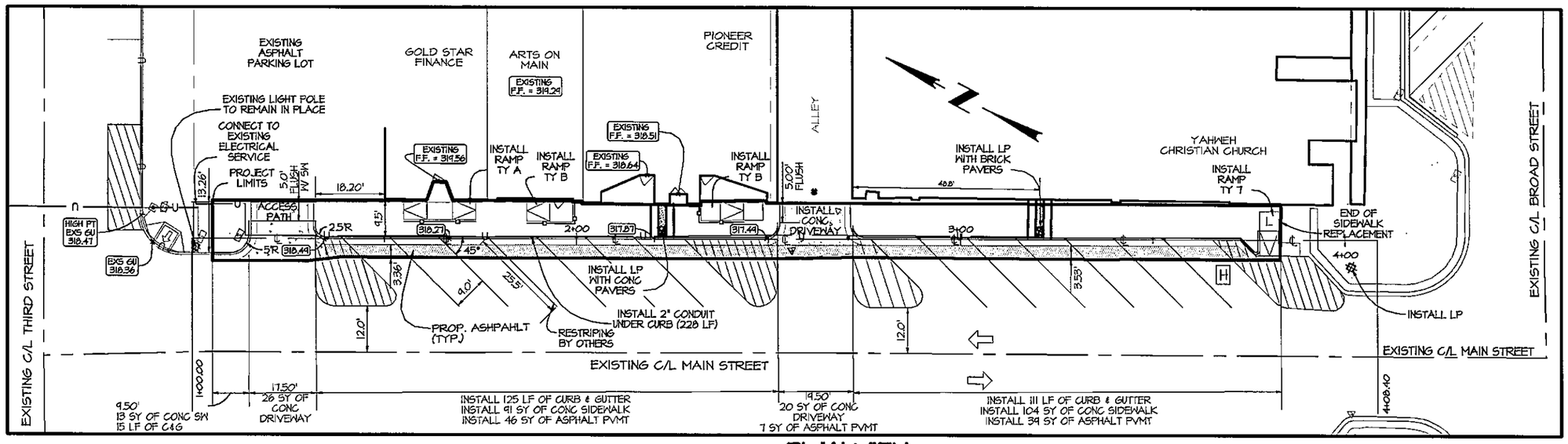

PLAN VIEW

Scale: 1" = 30'

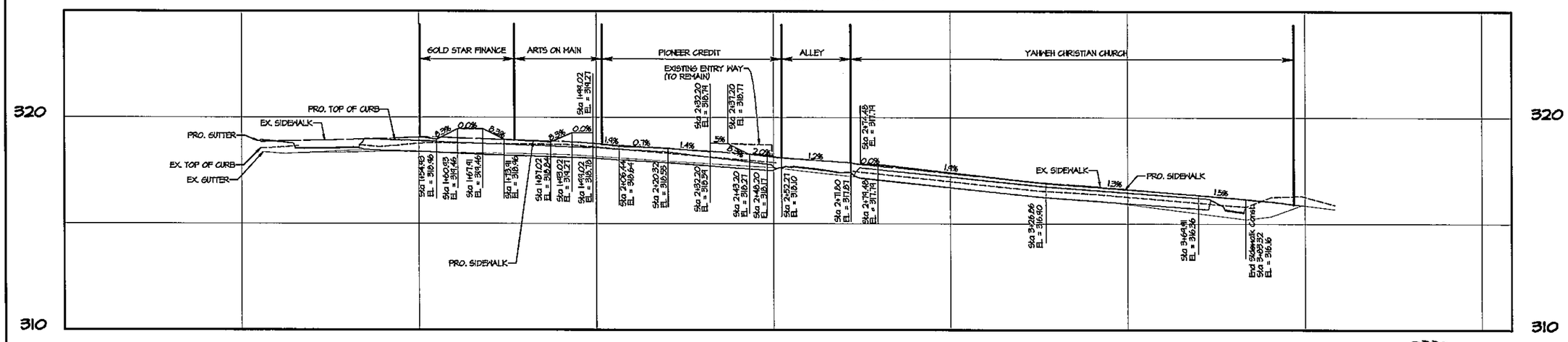

PROFILE VIEW

Horizontal Scale: 1" = 30'
Vertical Scale: 1" = 5'

NOTE:
REFER TO SHEET 32 FOR HANDRAIL DETAILS

QUANTITY SUMMARY

DESCRIPTION	QTY	UNIT
INSTALL CONC SIDEWALK	208	SY
INSTALL CURB & GUTTER	251	LF
INSTALL CONC DRIVEWAY	46	SY
INSTALL ASPHALT PAVEMENT	92	SY
INSTALL SPECIAL RAMP (TY A)	1	EA
INSTALL SPECIAL RAMP (TY B)	2	EA
INSTALL RAMP (TY 7)	1	EA
INSTALL HANDRAIL (TY A)	54	LF
INSTALL 2" CONDUIT	228	LF
INSTALL LIGHT POLES	2	EA
INSTALL CONC PAVERS	19	LF
INSTALL LIGHT POLE FOUNDATION	2	EA

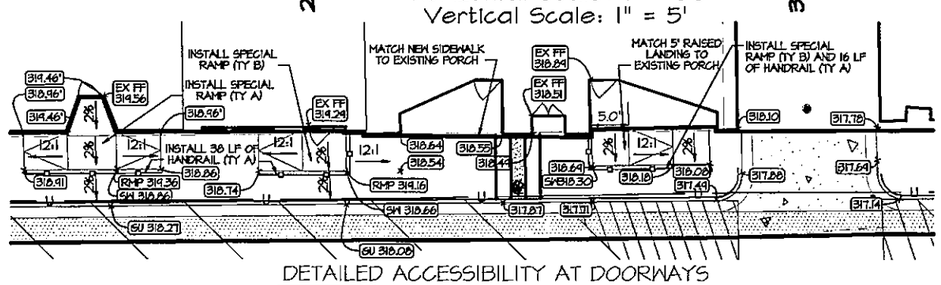

DETAILED ACCESSIBILITY AT DOORWAYS

1"=20'

STATE OF TEXAS
KAYLA R. WOOD
104859
REGISTERED PROFESSIONAL ENGINEER

THE SEAL APPEARING ON THIS DOCUMENT WAS AUTHORIZED BY KAYLA R. WOOD, P.E. 104859 ON 4/24/14. ALTERATION OF A SEALED DOCUMENT WITHOUT PRIOR NOTIFICATION TO THE RESPONSIBLE ENGINEER IS AN OFFENSE UNDER THE TEXAS ENGINEERING PRACTICE ACT.

REVISION | DATE

STEP PROJECT II
DOWNTOWN SIDEWALK ENHANCEMENTS
220 Texas Blvd., Texarkana, Texas 75501 903-798-3948

PROJECT: 139012
DATE: Apr 24, 2014
DESIGNED BY: KAYLA WOOD, PE
DRAWN BY: JEFF DAVIS
CHECKED BY: MASHELL DANIEL, PE
APPROVED BY: KYLE DOOLEY, PE

MTG Engineering & Surveying
5930 SHREVEPORT RD. | P.O. BOX 3766 TEXARKANA TEXAS 75501
P 903.838.8539 | F 903.832.4700 www.mtgengineers.com
© MTG 2013 TBPE NO. 3154

SIDEWALK IMPROVEMENTS
MAIN STREET

DRAWING
SHEET 22 OF 9

X:\2013 Projects\136012 Sidewalk Improvements, TXK STEP\05 Engineering Design\Design\Design_06.pro
Thu Apr 24, 2014 8:29AM

Attachment: Exhibit 'B-2' STEP II Sheets 21-47 (1124 : Res No. 2014 - 067 R STEP Project II Downtown Sidewalk Enhancements DPW 14 - 02)

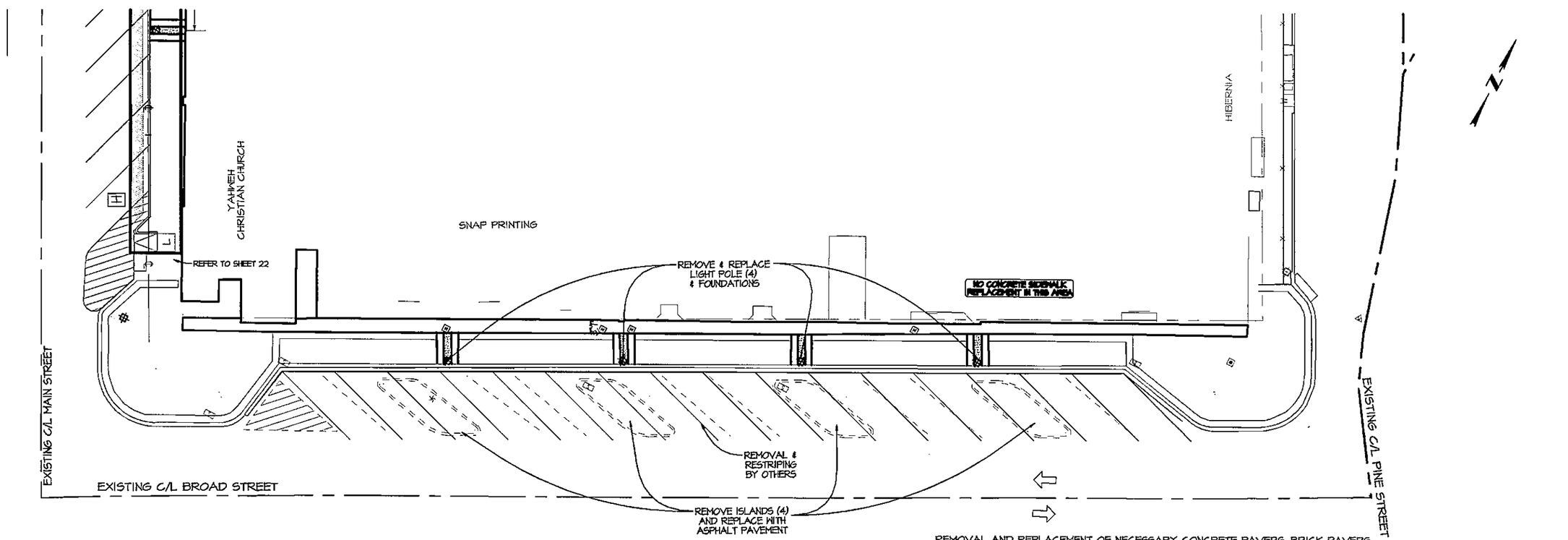

REMOVAL AND REPLACEMENT OF NECESSARY CONCRETE PAVERS, BRICK PAVERS AND CONCRETE SIDEWALK FOR LIGHT POLE FOUNDATION REPLACEMENT IS SUBSIDIARY TO THE REMOVAL AND REPLACEMENT OF LIGHT POLE FOUNDATION.

PROPOSED LIGHT POLES ARE TO BE CONNECT TO THE EXISTING ELECTRICAL SYSTEM.

DEMOLITION & SITE PLAN

1"=30'

QUANTITY SUMMARY

DESCRIPTION	QTY	UNIT
ROW PREP	1.94	STA
INSTALL LIGHT POLES	4	EA
INSTALL LIGHT POLE FOUNDATION	4	EA
INSTALL ASPHALT PVMNT	146	SY

LEGEND

	RIGHT-OF-WAY	W	WATER METER
	ASPHALT OR CONC. PAVEMENT		WATER VALVE
x	FENCE LINE		FIRE HYDRANT
T	TELEPHONE CABLE		SEWER MANHOLE
G	GAS LINE		SIGN
E	OVERHEAD ELECTRIC LINE		PROPOSED LIGHT POLE
U	UNDERGROUND ELECTRIC LINE		PROPOSED CONC. CURB
	RIGHT-OF-WAY MARKER		EDGE OF PAVEMENT
	POWER POLE	320.00	PROPOSED SPOT ELEVATION
	LIGHT POLE	G	GAS METER

STATE OF TEXAS
KAYLA R. WOOD
104859
REGISTERED PROFESSIONAL ENGINEER

THE SEAL APPEARING ON THIS DOCUMENT WAS AUTHORIZED BY KAYLA R. WOOD, P.E. 104859 ON 4/24/14. ALTERATION OF A SEALED DOCUMENT WITHOUT PRIOR NOTIFICATION TO THE RESPONSIBLE ENGINEER IS AN OFFENSE UNDER THE TEXAS ENGINEERING PRACTICE ACT.

REVISION | DATE
1
2
3
4
5

STEP PROJECT II
DOWNTOWN SIDEWALK ENHANCEMENTS
220 Texas Blvd., Texarkana, Texas 75501 903-798-3949

PROJECT: 136012
DATE: APR 24, 2014
DESIGNED BY: KAYLA WOOD, PE
DRAWN BY: JEFF DAVIS
CHECKED BY: MASHELL DANIEL, PE
APPROVED BY: KYLE DOOLEY, PE

MTG Engineering Consultants
5950 SHREVEPORT RD. | P.O. BOX 3700
TEXARKANA, TEXAS 75501
P 903.838.8333 | F 903.832.4700
www.mtgengineers.com
© MTG 2013 TBPE NO. 354

SIDEWALK IMPROVEMENTS
BROAD STREET

DRAWING
SHEET 23 OF 9

X:\2013 Projects\136012 Sidewalk Improvements, TXK STEP\05 Engineering Design\Design\Design_06.pro
Thu Apr 24, 2014 8:18AM

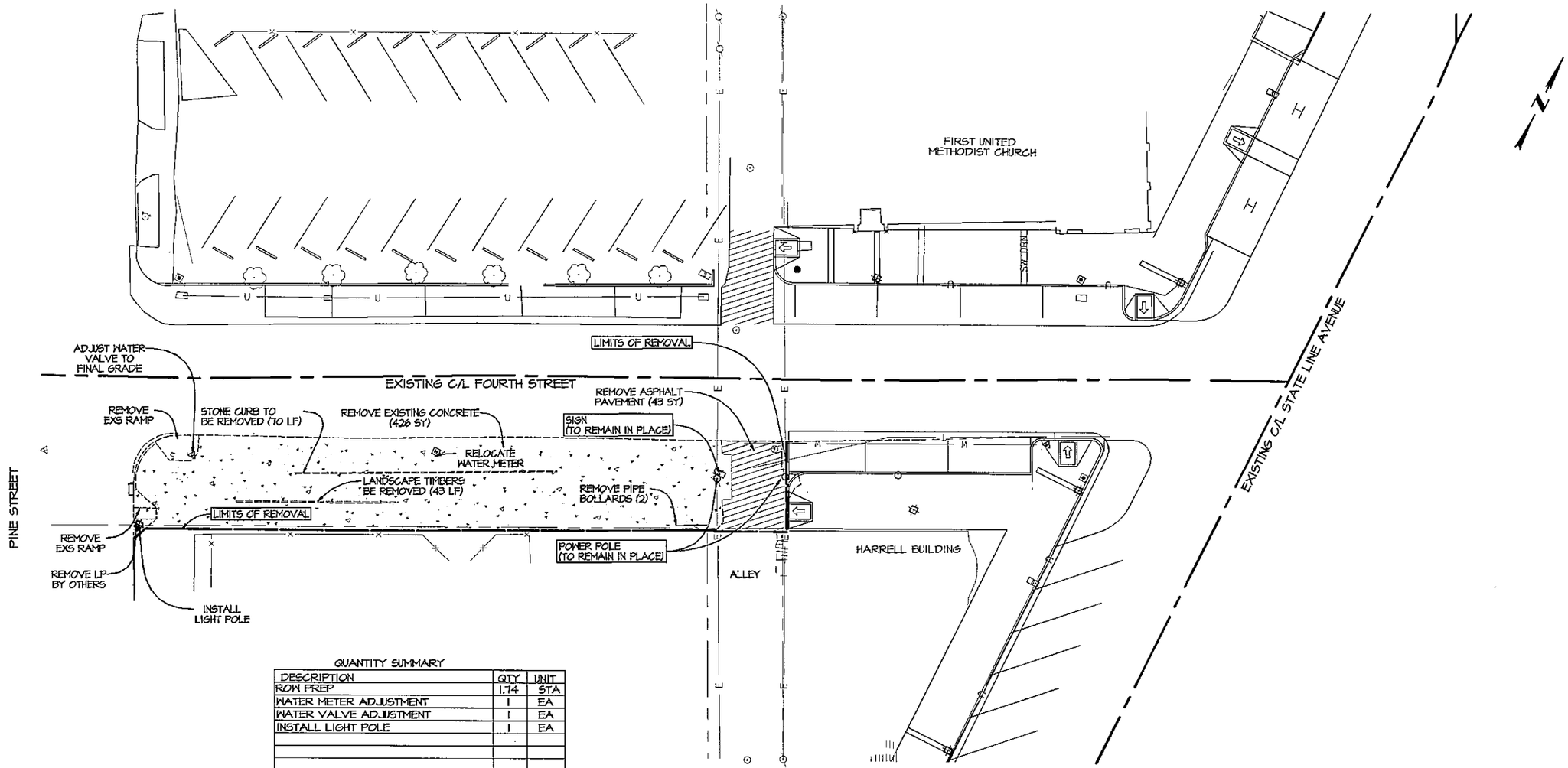

QUANTITY SUMMARY

DESCRIPTION	QTY	UNIT
ROW PREP	1.74	STA
WATER METER ADJUSTMENT	1	EA
WATER VALVE ADJUSTMENT	1	EA
INSTALL LIGHT POLE	1	EA

EXISTING CONDITIONS & DEMOLITION PLAN

1"=30'

LEGEND

— — —	RIGHT-OF-WAY	W	WATER METER
———	ASPHALT OR CONC. PAVEMENT		WATER VALVE
—x—	FENCE LINE		FIRE HYDRANT
—T—	TELEPHONE CABLE		SEWER MANHOLE
—G—	GAS LINE		SIGN
—E—	OVERHEAD ELECTRIC LINE		PROPOSED LIGHT POLE
—U—	UNDERGROUND ELECTRIC LINE		PROPOSED CONC. CURB
	RIGHT-OF-WAY MARKER		EDGE OF PAVEMENT
	POWER POLE	320.00	PROPOSED SPOT ELEVATION
	LIGHT POLE	G	GAS METER

STATE OF TEXAS
KAYLA R. WOOD
104859
REGISTERED PROFESSIONAL ENGINEER

THE SEAL APPEARING ON THIS DOCUMENT WAS AUTHORIZED BY KAYLA R. WOOD, P.E. 104859 ON 4/24/14. ALTERATION OF A SEALED DOCUMENT WITHOUT PRIOR NOTIFICATION TO THE RESPONSIBLE ENGINEER IS AN OFFENSE UNDER THE TEXAS ENGINEERING PRACTICE ACT.

REVISION | DATE

STEP PROJECT II
DOWNTOWN SIDEWALK ENHANCEMENTS
220 Texas Blvd., Texarkana, Texas 75501 903-798-3948

PROJECT: 136012
DATE: APR 24, 2014
DESIGNED BY: KAYLA WOOD, PE
DRAWN BY: JEFF DAVIS
CHECKED BY: MASHELL DANIEL, PE
APPROVED BY: KYLE DOOLEY, PE

MTG Engineering Company
5960 SUMMERHILL RD. | P.O. BOX 5786 TEXARKANA, TEXAS 75501
P 903.832.1289 | F 903.832.7100 www.mtgengineering.com
© MTG 2013 TBPE NO. 3543

SIDEWALK IMPROVEMENTS
4TH STREET

DRAWING
SHEET 24 OF 9

X:\2013 Projects\136012 Sidewalk Improvements, TXK STEP\05 Engineering Design\Design\Design_06.pro
Thu Apr 24, 2014 8:18AM

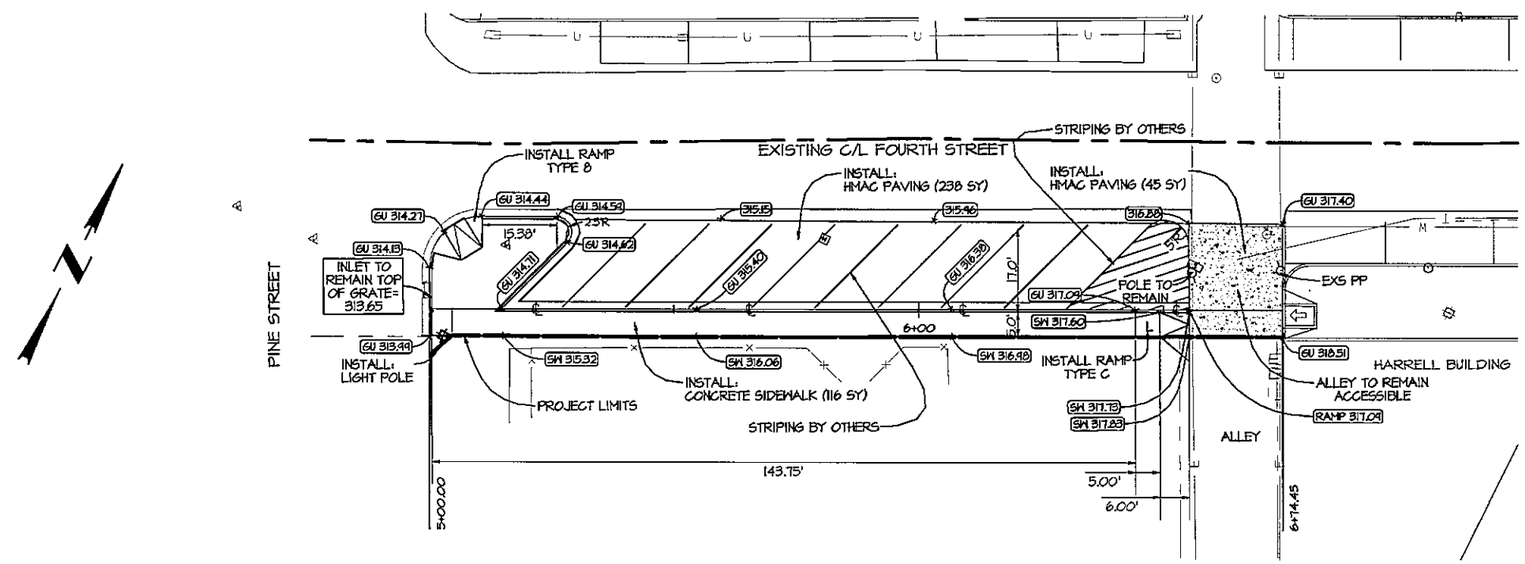

PLAN VIEW
Scale: 1" = 30'

QUANTITY SUMMARY

DESCRIPTION	QTY	UNIT
INSTALL CONC SIDEWALK	256	SY
INSTALL HMAC PVMNT	283	SY
INSTALL CONC CURB & GUTTER	204	LF
INSTALL RAMP TY B	1	EA
INSTALL RAMP TY (C)	1	EA
INSTALL LIGHT POLES	1	EA
INSTALL LIGHT POLE FOUNDATION	1	EA

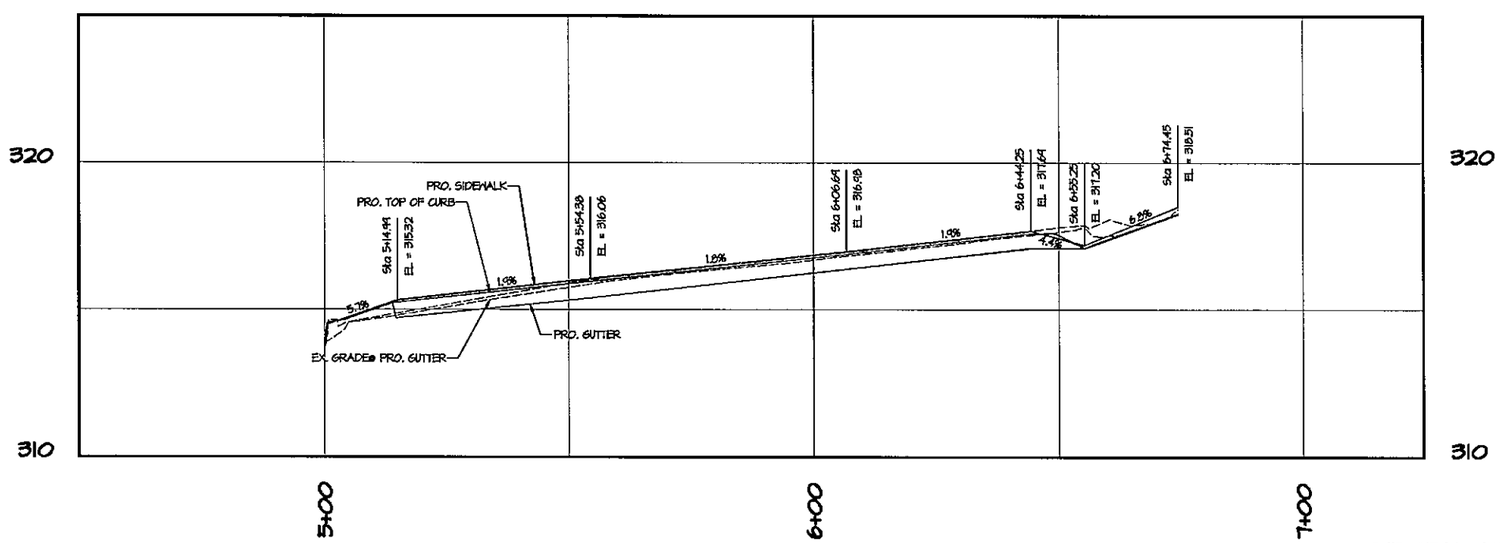

PROFILE VIEW
Horizontal Scale: 1" = 30'
Vertical Scale: 1" = 5'

STATE OF TEXAS
KAYLA R. WOOD
104859
REGISTERED PROFESSIONAL ENGINEER

THE SEAL APPEARING ON THIS DOCUMENT WAS AUTHORIZED BY KAYLA R. WOOD, P.E. 104859 ON 4/24/14. ALTERATION OF A SEALED DOCUMENT WITHOUT PRIOR NOTIFICATION TO THE RESPONSIBLE ENGINEER IS AN OFFENSE UNDER THE TEXAS ENGINEERING PRACTICE ACT.

REVISION | DATE
1
2
3
4
5
6

STEP PROJECT II
DOWNTOWN SIDEWALK ENHANCEMENTS
220 Texas Blvd., Texarkana, Texas 75501 903-798-3940

PROJECT: 138012
DATE: APR 24, 2014
DESIGNED BY: KAYLA WOOD, PE
DRAWN BY: JEFF DAVIS
CHECKED BY: MASRELL DANIEL, PE
APPROVED BY: KYLE DOOLEY, PE

MTG Engineers & Consultants
5950 SUMMERHILL RD. | P.O. BOX 3780
TEXARKANA TEXAS 75501
P 903.838.8039 | F 903.832.8100
www.mtgengineers.com
© MTG 2013 TBPE NO. 3544

SIDEWALK IMPROVEMENTS
4TH STREET

DRAWING
SHEET 25 OF 9

X:\2013 Projects\138012 Sidewalk Improvements, TXK STEP\05 Engineering Design\Design\Design_06.pro
Thu Apr 24, 2014 8:20AM

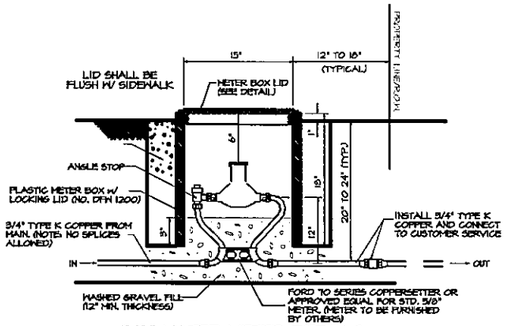

5/8" WATER METER DETAILS

NOT TO SCALE

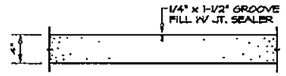

GROOVE JOINT

NOT TO SCALE

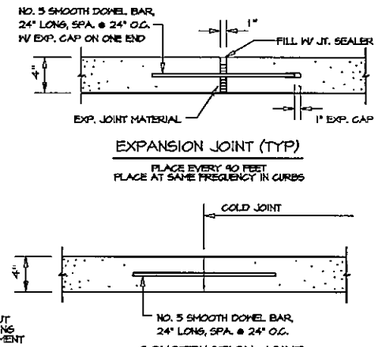

EXPANSION JOINT (TYP)

PLACE EVERY 90 FEET
PLACE AT SAME FREQUENCY IN CURBS

CONSTRUCTION JOINT

NOT TO SCALE

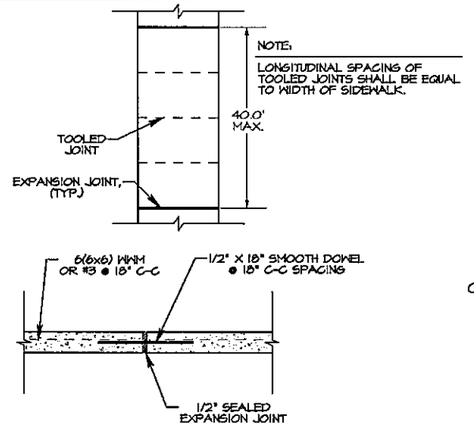

SIDEWALK JOINT LAYOUT

NOT TO SCALE

NOTES:

1. EXPANSION JOINTS SHALL BE PLACED AT A MINIMUM SPACING OF 40.0', AT ALL POINTS OF CURVATURE AND, AT ALL POINTS OF INTERSECTION.
2. THE CONCRETE SHALL HAVE A MINIMUM 28- DAY COMPRESSIVE STRENGTH OF 3000 PSI WITH 4 - 6 PERCENT ENTRAINED AIR.

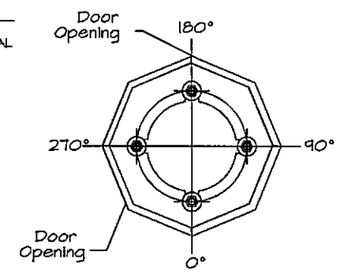

ANCHORAGE GUIDE

NOT TO SCALE

Specifications

POST DESCRIPTION
The lighting post shall be all aluminum, one-piece construction, with a low profile octagonal base design. The shaft shall be Φ5" fluted. The post shall be provided with (2) 24" clamp on banner arms.
MATERIALS
The base shall be heavy wall, cast aluminum produced from certified ASTM 356.1 ingot per ASTM B-179-95a or ASTM B26-95. The shafts shall be extruded aluminum, 6061 alloy, tempered to a T6 condition. All hardware shall be tamper resistant stainless steel. Anchor bolts to be completely hot dip galvanized.
CONSTRUCTION
The shaft shall be double welded to the base casting and shipped as one piece for maximum structural integrity. The shaft shall be circumferentially welded inside the base casting at the top of the access doors, and externally where the shaft exits the base. All exposed welds below 8' shall be ground smooth. All welding shall be per ANSI/AWS D1.2-90. All welders shall be certified per Section 5 of ANSI/AWS D1.2-90.
DIMENSIONS
The post shall be 14'- 0" in height with a 12" octagonal base. The shaft diameter shall be 5". At the top of the post, a Φ3" x 3" tall tenon with a transitional donut shall be provided for luminaire mounting.
INSTALLATION
The post shall be provided with four, hot dip galvanized L-type anchor bolts to be installed on an 8" diameter bolt circle. Two doors shall be provided in the base for anchorage and wiring access. A grounding screw shall be provided inside the base accessible from one door.
LUMINAIRE DESCRIPTION
- Granville Premier II LED
- 80W 400mA Driver, 5k CCT
- Symmetric Lunar Optic Type V
- No Trim, Spike Finial
- NEMA Twistlock Photocontrol Receptacle
- DTL Twistlock Photocontrol For Solid-State Lighting (120-277V)

For complete specification see LUM_GPD.

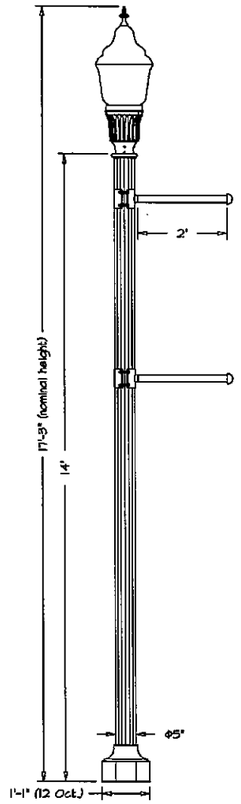

LIGHT POLE

ILLUMINATION ASSEMBLY

NOT TO SCALE

Catalog #'s:
GPD805KASMZ8NSZHPCS
COA14F5J12POTABGBZ

HOLOPHANE®
LEADER IN LIGHTING SOLUTIONS
An ACUITY BRANDS Company

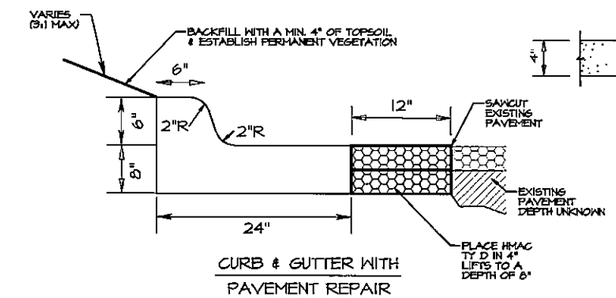

CURB & GUTTER WITH
PAVEMENT REPAIR

NOT TO SCALE

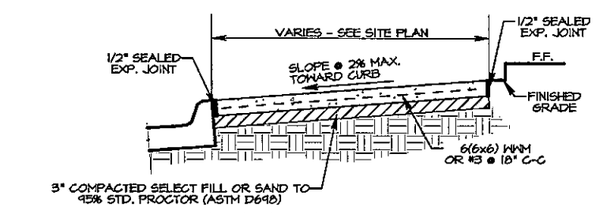

TYPICAL 4" THICK SIDEWALK SECTION
ADJACENT TO BUILDING / CURB

NOT TO SCALE

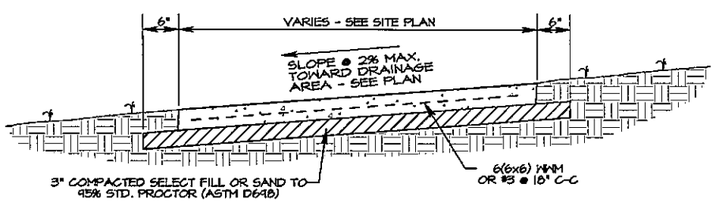

TYPICAL 4" THICK SIDEWALK SECTION

NOT TO SCALE

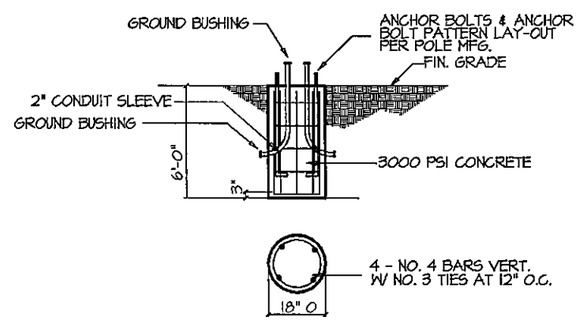

ILLUMINATION ASSEMBLY FOUNDATION

NOT TO SCALE

THE SEAL APPEARING ON THIS DOCUMENT WAS AUTHORIZED BY KAYLA R. WOOD, P.E. 104859 ON 4/24/14. ALTERATION OF A SEALED DOCUMENT WITHOUT PRIOR NOTIFICATION TO THE RESPONSIBLE ENGINEER IS AN OFFENSE UNDER THE TEXAS ENGINEERING PRACTICE ACT.

REVISION | DATE
1
2
3
4
5

STEP PROJECT II
DOWNTOWN SIDEWALK ENHANCEMENTS
220 Texas Blvd., Texarkana, Texas 75501 903-798-3948

PROJECT: 138012
DATE: APR 24, 2014
DESIGNED BY: KAYLA WOOD, PE
DRAWN BY: JEFF DAVIS
CHECKED BY: MASWELL DANIEL, PE
APPROVED BY: KYLE DOOLEY, PE

MTG Engineers & Surveyors
5980 SANDERSHILL RD., P.O. BOX 5786
TEXARKANA TEXAS 75501
P 903.838.0539 | F 903.832.4100
www.mtgengineers.com
© MTG 2013 TBPE NO. 3154

MISCELLANEOUS DETAILS

DRAWING
SHEET 26 OF 9

X:\2013 Projects\138012 Sidewalk Improvements, TXK STEP\05 Engineering Design\Design\Design_06.pro
Thu Apr 24, 2014 8:18AM

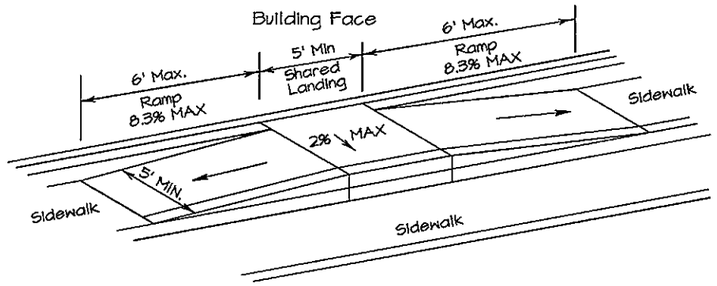

Note:
Handrails not shown for clarity.

PARALLEL CURB RAMP
TYPE "A" (SPECIAL)
NOT TO SCALE

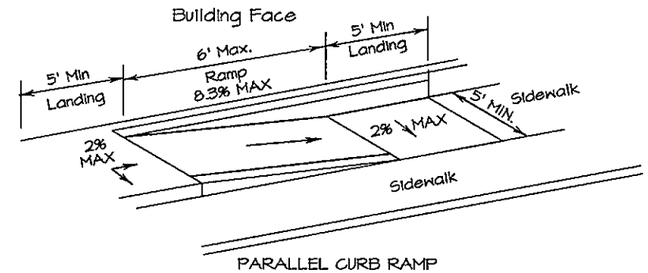

Note:
Handrails not shown for clarity.

PARALLEL CURB RAMP
TYPE "B" (SPECIAL)
NOT TO SCALE

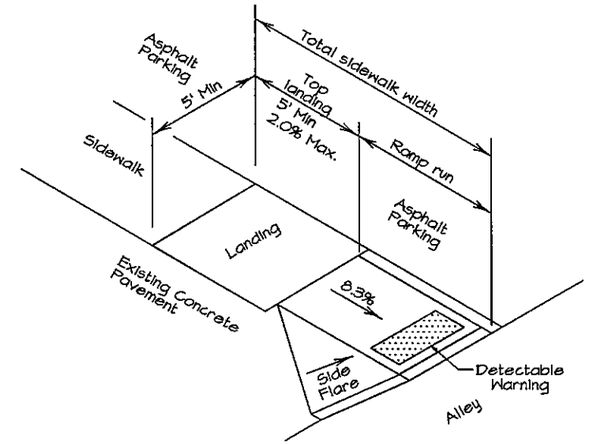

CURB RAMP (FLARED SIDE)
TYPE C
NOT TO SCALE

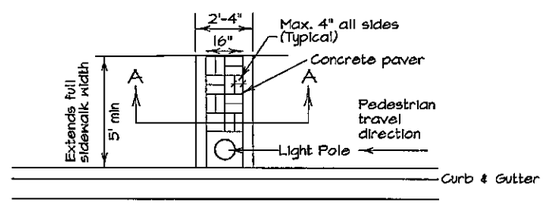

Concrete Paver Details
For Sidewalk Use

QUANTITIES OF CONCRETE PAVERS ARE BY THE LINEAR FEET OF SIDEWALK WIDTH. ALL CONCRETE, SAND CUSHION, REINFORCEMENT AND INSTALLATION IS SUBSIDIARY TO THIS BID ITEM.

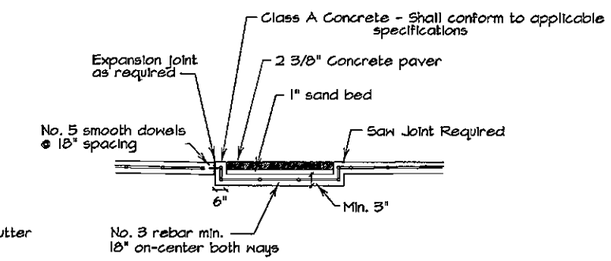

Section A-A

THE SEAL APPEARING ON THIS DOCUMENT WAS AUTHORIZED BY KAYLA R. WOOD, P.E. 104859 ON 4/24/14. ALTERATION OF A SEALED DOCUMENT WITHOUT PRIOR NOTIFICATION TO THE RESPONSIBLE ENGINEER IS AN OFFENSE UNDER THE TEXAS ENGINEERING PRACTICE ACT.

REVISION | DATE
1
2
3
4
5

STEP PROJECT II
DOWNTOWN SIDEWALK ENHANCEMENTS
220 Texas Blvd., Texarkana, Texas 75501 903-798-3948

PROJECT: 136012
DATE: Apr 24, 2014
DESIGNED BY: KAYLA WOOD, PE
DRAWN BY: JEFF DAVIS
CHECKED BY: MASRELL DANIEL, PE
APPROVED BY: KYLE DOOLEY, PE

MTG engineers & consultants
5980 SHERRILL RD. | P.O. BOX 3780
TEXARKANA, TEXAS 75501
P 903.838.8539 | F 903.832.4100
www.mtgengineers.com
© MTG 2013 TBPE NO. 354

MISCELLANEOUS DETAILS

DRAWING
26A
SHEET OF 9

X:\2013 Projects\136012 Sidewalk Improvements, TXK STEP\05 Engineering Design\Design\Design_06.pro
Thu Apr 24, 2014 8:21AM

Attachment: Exhibit 'B-2' STEP II Sheets 21-47 (1124 : Res No. 2014 - 067 R STEP Project II Downtown Sidewalk Enhancements DPW 14 - 02)

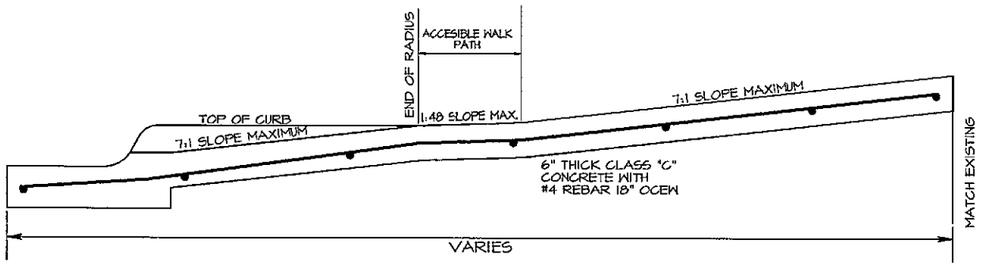

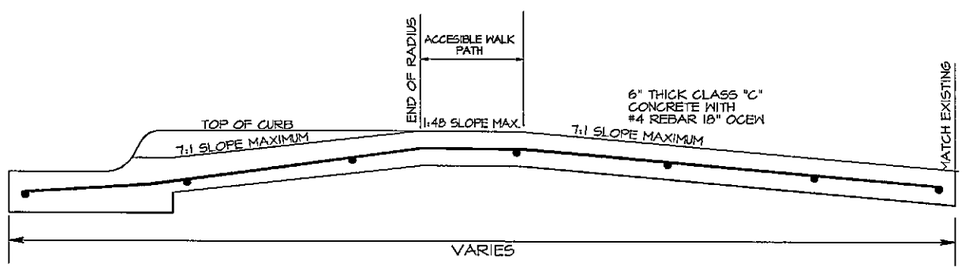

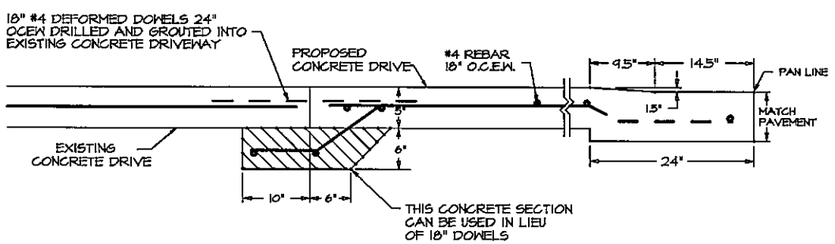

DRIVEWAY SECTION

NOT TO SCALE

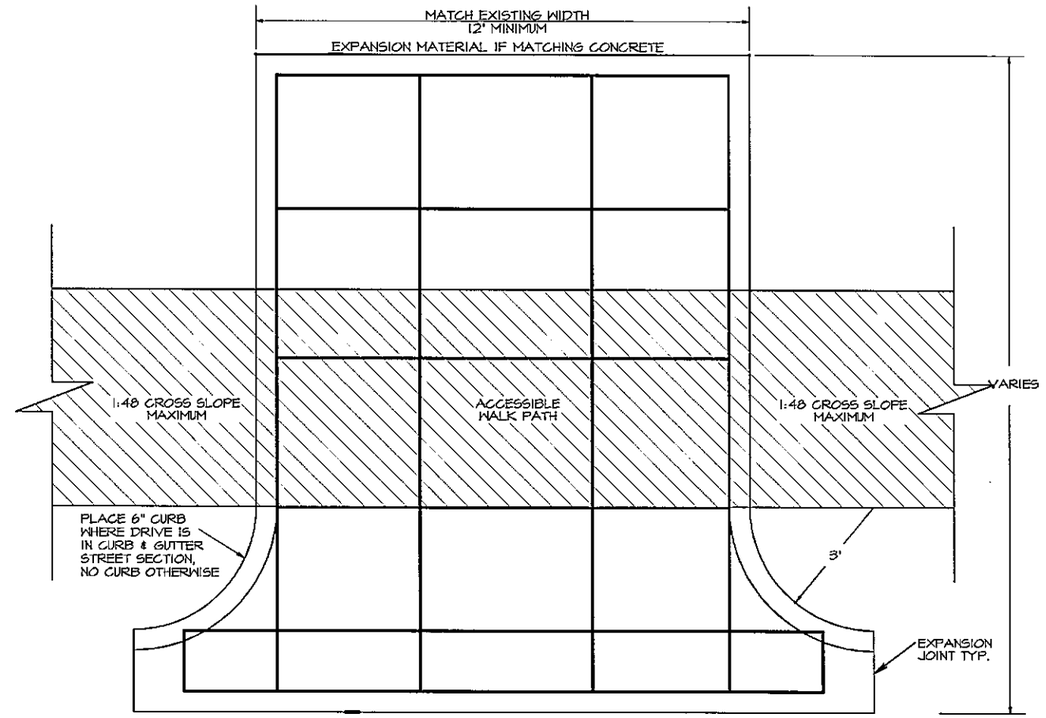

PLAN VIEW DRIVEWAY

NOT TO SCALE

THE SEAL APPEARING ON THIS DOCUMENT WAS AUTHORIZED BY KAYLA R. WOOD, P.E. 104859 ON 4/24/14. ALTERATION OF A SEALED DOCUMENT WITHOUT PRIOR NOTIFICATION TO THE RESPONSIBLE ENGINEER IS AN OFFENSE UNDER THE TEXAS ENGINEERING PRACTICE ACT.

REVISION	DATE
1	
2	
3	
4	
5	
6	

STEP PROJECT II
DOWNTOWN SIDEWALK ENHANCEMENTS
220 Texas Blvd., Texarkana, Texas 75501 903-798-3948

PROJECT: 136012
DATE: APR 24, 2014
DESIGNED BY: KAYLA HOOD, PE
DRAWN BY: JEFF DAVIS
CHECKED BY: MASRELL DANIEL, PE
APPROVED BY: KYLE DOOLEY, PE

MTG Engineers & Consultants
5980 SUMMERHILL RD. | P.O. BOX 5190
TEXARKANA TEXAS 75501
P 903.832.8223 | F 903.832.4700
www.mtgengineers.com
© MTG 2013 TBPE NO. 3544

DRIVEWAY DETAILS

DRAWING
SHEET 27 OF 9

X:\2013 Projects\136012 Sidewalk Improvements, TXK STEP\05 Engineering Design\Design\Design\Design_06.pro
Thu Apr 24, 2014 6:19AM

Attachment: Exhibit 'B-2' STEP II Sheets 21-47 (1124 : Res No. 2014 - 067 R STEP Project II Downtown Sidewalk Enhancements DPW 14 - 02)

DISCLAIMER:
The use of this standard is governed by the "Texas Engineering Practice Act". No warranty of any kind is made by TxDOT for any purpose whatsoever. TxDOT assumes no responsibility for the conversion of this standard to other formats or for incorrect results or damages resulting from its use.

TYPE 1

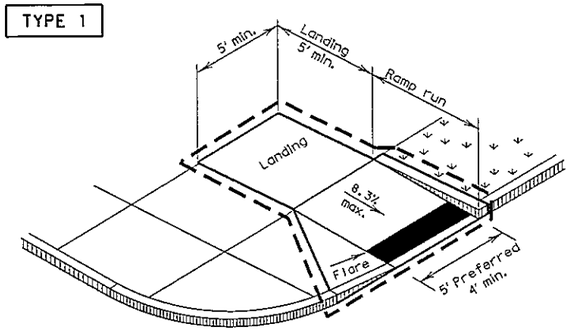

PERPENDICULAR CURB RAMP

TYPE 2

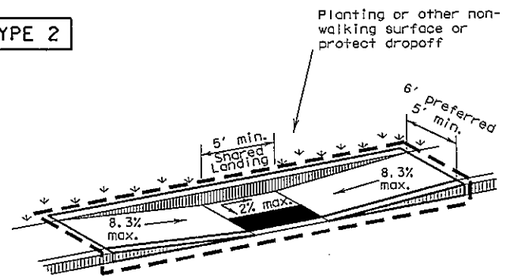

PARALLEL CURB RAMP
(Use only where water will not pond in the landing.)

TYPE 5

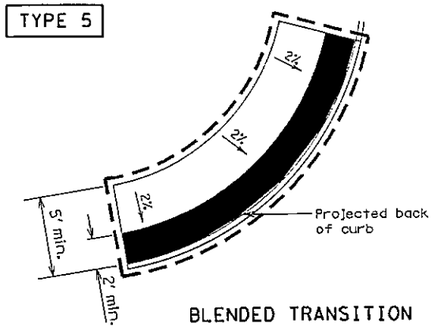

BLENDED TRANSITION

TYPE 20

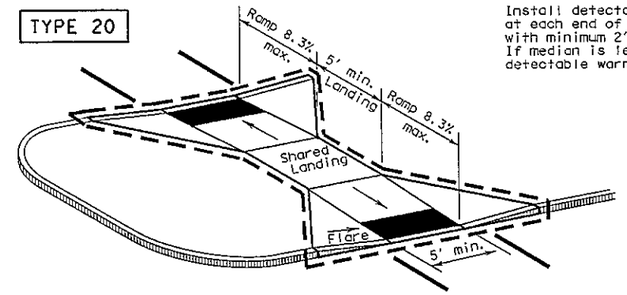

Install detectable warning surface at each end of cut-through ramp with minimum 2' smooth surface between. If median is less than 6' wide, eliminate detectable warning surfaces.

TYPE 21

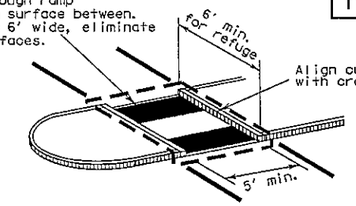

Curb details are shown elsewhere in the plans.

CURB RAMPS AT MEDIAN ISLANDS

TYPE 7

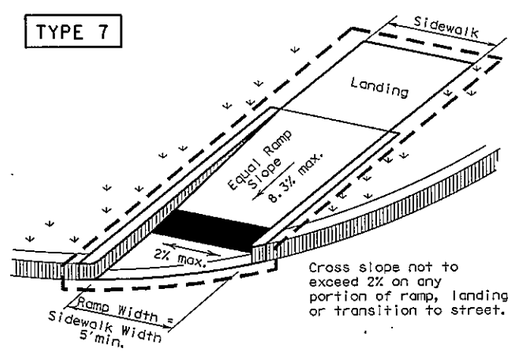

Cross slope not to exceed 2% on any portion of ramp, landing or transition to street.

(Sidewalk set back from curb)

TYPE 10

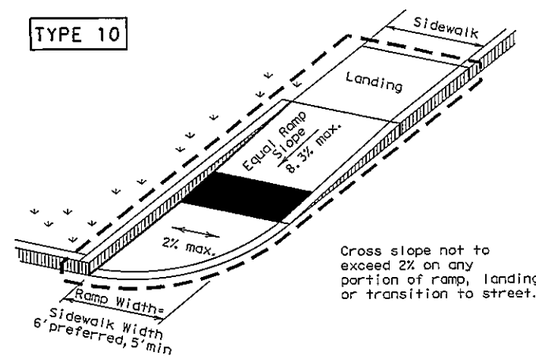

Cross slope not to exceed 2% on any portion of ramp, landing or transition to street.

(Sidewalk adjacent to curb)

DIRECTIONAL RAMPS WITHIN RADIUS

TYPE 22

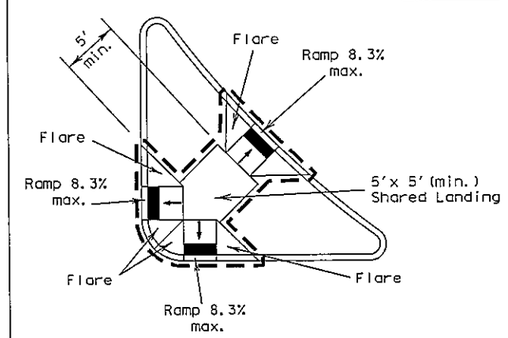

COMBINATION ISLAND RAMPS

TYPE 3

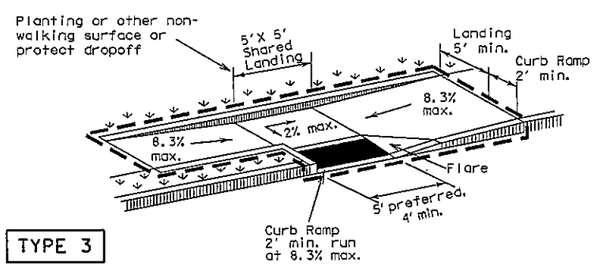

TYPE 6

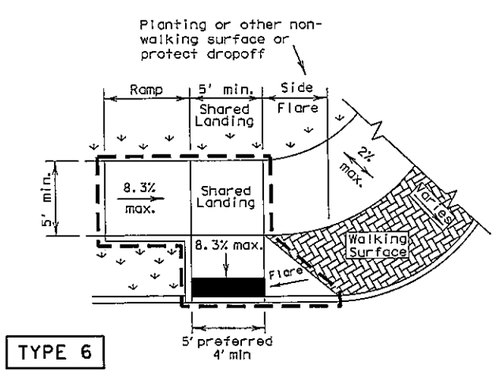

COMBINATION CURB RAMPS

TYPE 11

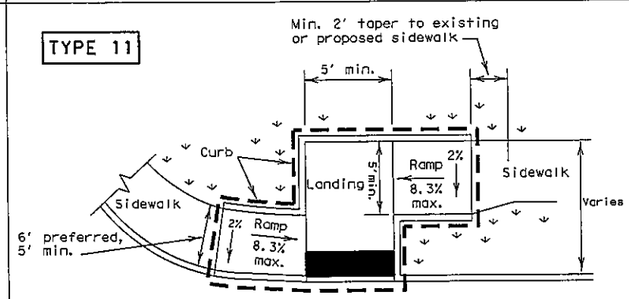

OFFSET PARALLEL CURB RAMP

NOTES / LEGEND:

See General Notes on sheet 2 of 4 for more information.

Denotes planting or non-walking surface not part of pedestrian circulation path.

Ramp Limits of Payment

Detectable Warning Surface

SHEET 1 OF 4

Texas Department of Transportation — Design Division Standard

PEDESTRIAN FACILITIES CURB RAMPS

PED-12A

FILE: ped12a.dgn	DN: TxDOT	CK: RM	DW: TxDOT	CK: VP
©TxDOT March 2002	CONT	SECT	JOB	HIGHWAY
REVISIONS				
VP June 13, 2012	DIST	COUNTY		SH

REVISION | DATE

CITY OF TEXARKANA, TEXAS
220 Texas Blvd., Texarkana, Texas 75501 903-798-3848

PROJECT: STEP
DATE: Apr 22, 2014
DESIGNED BY: NLD
DRAWN BY: NLD
CHECKED BY: BKD
APPROVED BY: BKD

DETAILS
PED-05

STEP PROJECT
Dept. of Engineering & Infrastructure
City of Texarkana, Texas

DRAWING

Attachment: Exhibit 'B-2' STEP II Sheets 21-47 (1124 : Res No. 2014 - 067 R STEP Project II Downtown Sidewalk Enhancements DPW 14 - 02)

General Notes

Curb Ramps

1. Install a curb ramp or blended transition at each pedestrian street crossing.
2. All slopes shown are maximum allowable. Lesser slopes that will still drain properly should be used. Adjust curb ramp length or grade of approach sidewalks as directed.
3. The minimum sidewalk width is 5'. Where the sidewalk is adjacent to the back of curb, a 6' sidewalk width is desirable. Where a 5' sidewalk cannot be provided due to site constraints, sidewalk width may be reduced to 4' for short distances. 5'x 5' passing areas at intervals not to exceed 200' are required.
4. Landings shall be 5'x 5' minimum with a maximum 2% slope in any direction.
5. Maneuvering space at the bottom of curb ramps shall be a minimum of 4'x 4' wholly contained within the crosswalk and wholly outside the parallel vehicular travel path.
6. Maximum allowable cross slope on sidewalk and curb ramp surfaces is 2%.
7. Provide flared sides where the pedestrian circulation path crosses the curb ramp. Flared sides shall be sloped at 10% maximum, measured parallel to the curb. Returned curbs may be used only where pedestrians would not normally walk across the ramp, either because the adjacent surface is planted, substantially obstructed, or otherwise protected.
8. Additional information on curb ramp location, design, light reflective value and texture may be found in the current edition of the Texas Accessibility Standards (TAS) and 16 TAC 68.102.
9. To serve as a pedestrian refuge area, the median should be a minimum of 6' wide, measured from back of curbs. Medians should be designed to provide accessible passage over or through them.
10. Small channelization islands, which do not provide a minimum 5'x 5' landing at the top of curb ramps, shall be cut through level with the surface of the street.
11. Crosswalk dimensions, crosswalk markings and stop bar locations shall be as shown elsewhere in the plans. At intersections where crosswalk markings are not required, curb ramps shall align with theoretical crosswalks unless otherwise directed.
12. Handrails are not required on curb ramps. Provide curb ramps wherever on accessible route crosses (penetrates) a curb.
13. Curb ramps and landings shall be constructed and paid for in accordance with Item 531 "Sidewalks".
14. Place concrete at a minimum depth of 5" for ramps, flares and landings, unless otherwise directed.
15. Provide a smooth transition where the curb ramps connect to the street.
16. Curbs shown on sheet 1 within the limits of payment are considered part of the curb ramp for payment, whether it is concrete curb, gutter, or combined curb and gutter.
17. Existing features that comply with TAS may remain in place unless otherwise shown on the plans.

Detectable Warning Material

18. Curb ramps must contain a detectable warning surface that consists of raised truncated domes complying with Section 705 of the TAS. The surface must contrast visually with adjoining surfaces, including side flares. Furnish and install an approved cast-in-place dark brown or dark red detectable warning surface material adjacent to uncolored concrete, unless specified elsewhere in the plans.
19. Detectable Warning Materials must meet TxDOT Departmental Materials Specification DMS 4350 and be listed on the Material Producer List. Install products in accordance with manufacturer's specifications.
20. Detectable warning surfaces must be slip resistant and not allow water to accumulate.
21. Detectable warning surfaces shall be a minimum of 24" in depth in the direction of pedestrian travel, and extend the full width of the curb ramp or landing where the pedestrian access route enters the street.
22. Detectable warning surfaces shall be located so that the edge nearest the curb line is at the back of curb. Align the rows of domes to be perpendicular to the grade break between the ramp run and the street. Detectable warning surfaces may be curved along the corner radius.
23. Shaded areas on Sheet 1 of 4 indicate the approximate location for the detectable warning surface for each curb ramp type.

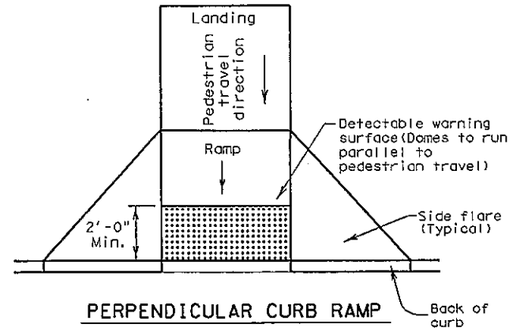

PERPENDICULAR CURB RAMP

Typical placement of detectable warning surface on sloping ramp run.

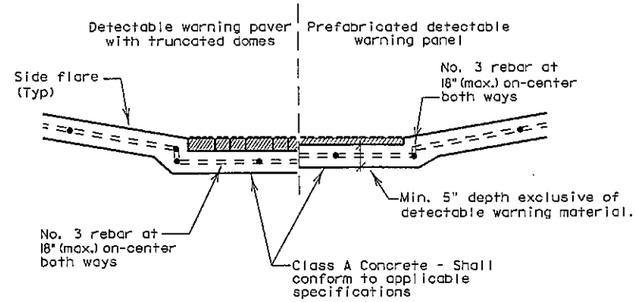

SECTION: CURB RAMP AT DETECTABLE WARNING

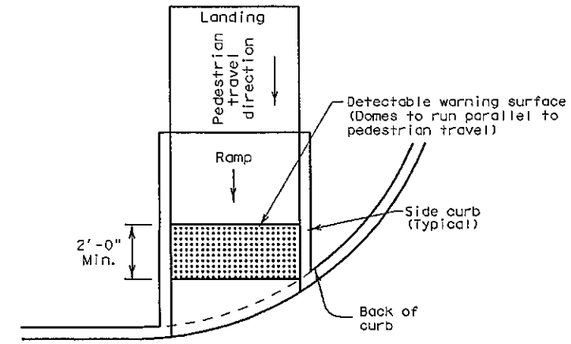

DIRECTIONAL CURB RAMP

Typical placement of detectable warning surface on sloping ramp run.

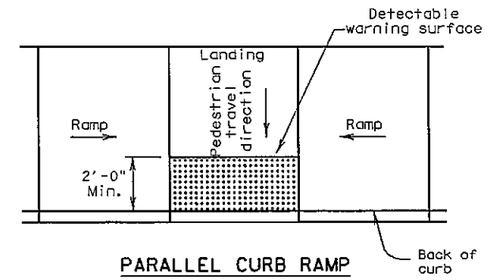

PARALLEL CURB RAMP

Typical placement of detectable warning surface on landing at street edge.

DETECTABLE WARNINGS

Detectable Warning Pavers

24. Furnish detectable warning paver units meeting all requirements of ASTM C-936, C-33. Lay in a two by two unit basket weave pattern or as directed.
25. Lay full-size units first followed by closure units consisting of at least 25 percent of a full unit. Cut detectable warning paver units using a power saw.

Sidewalks

26. Provide clear ground space at operable parts, including pedestrian push buttons. Operable parts shall be placed within one or more reach ranges specified in TAS 308.
27. Place traffic signal or illumination poles, ground boxes, controller boxes, signs, drainage facilities and other items so as not to obstruct the pedestrian access route or clear ground space.
28. Street grades and cross slopes shall be as shown elsewhere in the plans.
29. Changes in level greater than 1/4 inch are not permitted.
30. The least possible grade should be used to maximize accessibility. The running slope of sidewalks and crosswalks within the public right of way may follow the grade of the parallel roadway. Where a continuous grade greater than 5% must be provided, handrails may be desirable to improve accessibility. Handrails may also be needed to protect pedestrians from potentially hazardous conditions. If provided, handrails shall comply with TAS 505.
31. Handrail extensions shall not protrude into the usable landing area or into intersecting pedestrian routes.
32. Driveways and turnouts shall be constructed and paid for in accordance with Item "Intersections, Driveways and Turnouts". Sidewalks shall be constructed and paid for in accordance with Item, "Sidewalks".
33. Sidewalk details are shown elsewhere in the plans.

SHEET 2 OF 4

Texas Department of Transportation — Design Division Standard

PEDESTRIAN FACILITIES CURB RAMPS

PED-12A

FILE: ped12a.dgn	DN: TxDOT	CK: RM	DW: TxDOT	CK: VP
©TxDOT March 2002	CONT	SECT	JOB	HIGHWAY
REVISIONS				
VP June 13, 2012	DIST	COUNTY		

REVISION | DATE

CITY OF TEXARKANA, TEXAS
Sixth Texas Blvd Texarkana Texas 75501 (903) 798-3046

PROJECT: STEP
DATE: APR 22, 2014
DESIGNED BY: MLD
DRAWN BY: MLD
CHECKED BY: BKD

DETAILS
PED-05

STEP PROJECT
Dept. of Engineering & Infrastructure
City of Texarkana, Texas

DRAWING

Attachment: Exhibit 'B-2' STEP II Sheets 21-47 (1124 : Res No. 2014 - 067 R STEP Project II Downtown Sidewalk Enhancements DPW 14 - 02)

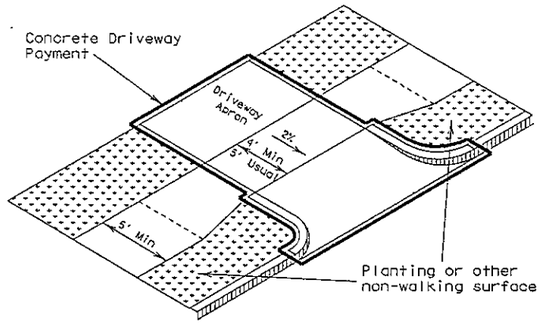

Setback sidewalk

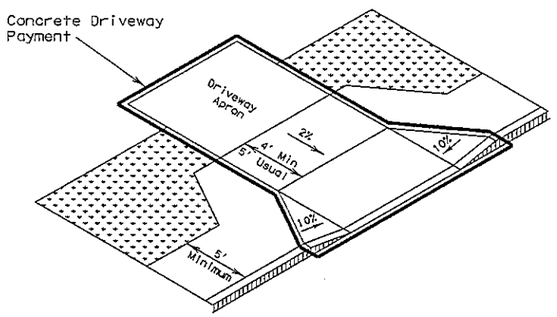

Apron offset sidewalk

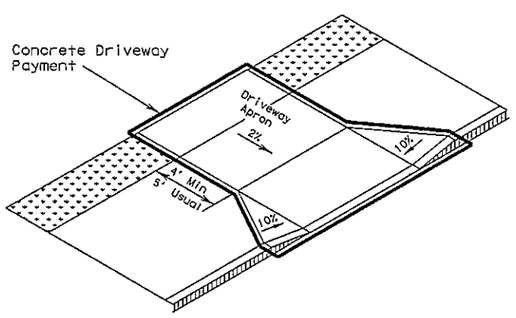

Wide sidewalk

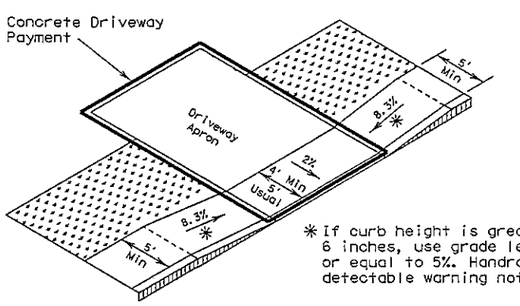

* If curb height is greater than 6 inches, use grade less than or equal to 5%. Handrail and detectable warning not required.

Ramp sidewalk

SIDEWALK TREATMENT AT DRIVEWAYS

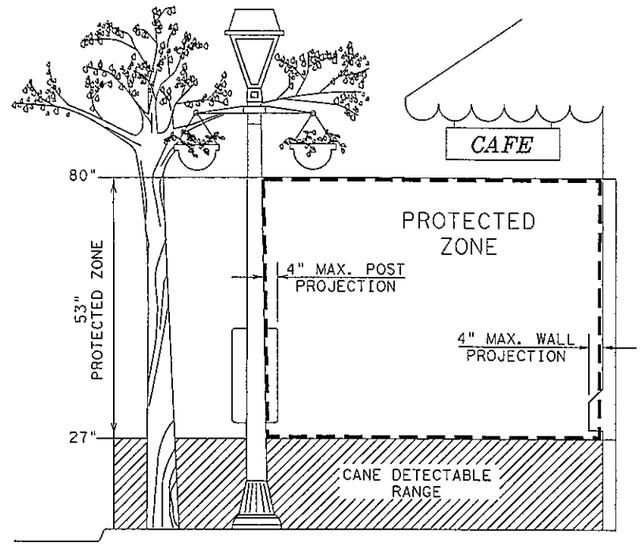

PROTECTED ZONE

In pedestrian circulation area, maximum 4" projection for post or wall mounted objects between 27"and 80" above the surface.

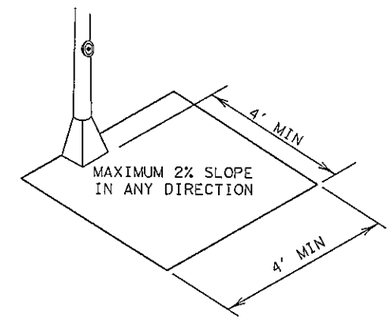

CLEAR GROUND SPACE ADJACENT TO PEDESTRIAN PUSH BUTTON

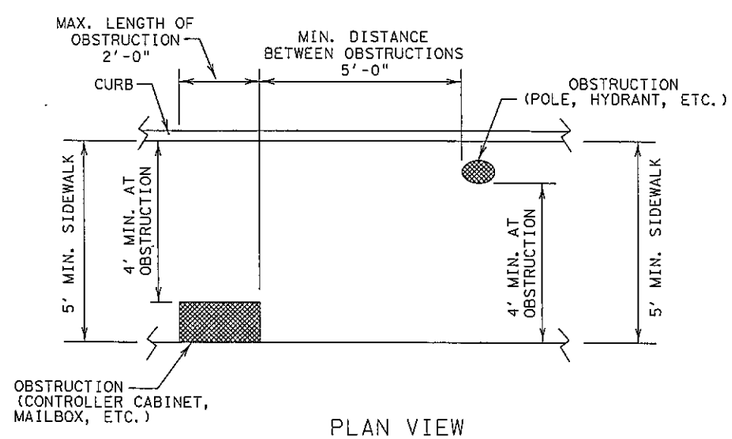

PLAN VIEW

PLACEMENT OF STREET FIXTURES

(ITEMS NOT INTENDED FOR PUBLIC USE. MINIMUM 4' x 4' CLEAR GROUND SPACE REQUIRED AT PUBLIC USE FIXTURES.)

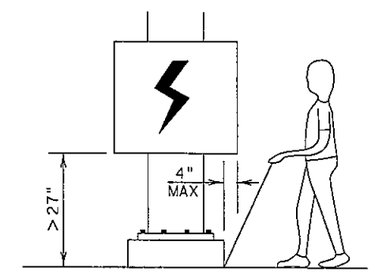

When an obstruction of a height greater than 27" from the surface would create a protrusion of more than 4" into the pedestrian circulation area, construct additional curb or foundation at the bottom to provide a maximum 4" overhang.

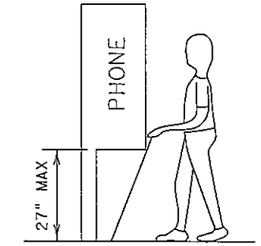

Protruding objects of a height ≤ 27" are detectable by cane and do not require additional treatment.

DETECTION BARRIER FOR VERTICAL CLEARANCE < 80"

SHEET 3 OF 4

Texas Department of Transportation — Design Division Standard

PEDESTRIAN FACILITIES CURB RAMPS

PED-12A

FILE: ped12a.dgn	DN: TxDOT	CK: RM	DW: TxDOT	CK: VP	
©TxDOT March 2002	CONT	SECT	JOB	HIGHWAY	
REVISIONS VP June 13, 2012	DIST		COUNTY		SHEET

REVISION | DATE

CITY OF TEXARKANA, TEXAS
220 Texas Blvd., Texarkana, Texas 75501 903-798-3946

PROJECT: STEP
DATE: Apr 29, 2014
DESIGNED BY: MLD
DRAWN BY: MLD
CHECKED BY: BKO
APPROVED BY: BKO

DETAILS PED-05

STEP PROJECT
Dept. of Engineering & Infrastructure
City of Texarkana, Texas

DRAWING

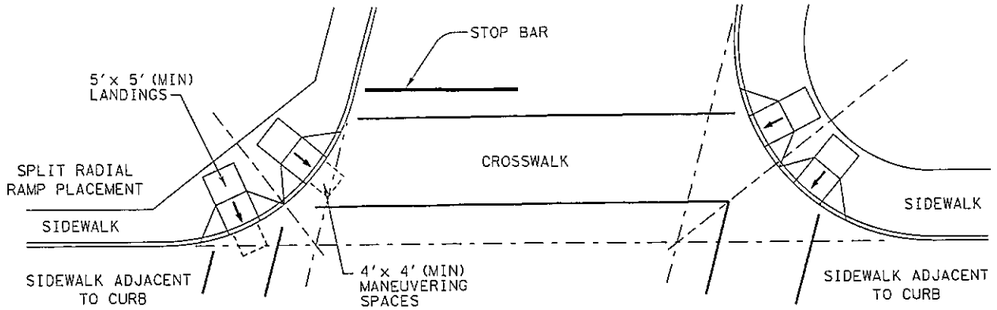

SKEWED INTERSECTION WITH "LARGE" RADIUS

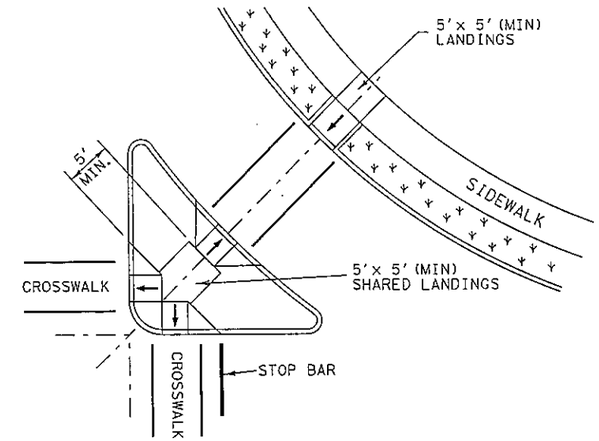

AT INTERSECTION
W/FREE RIGHT TURN & ISLAND

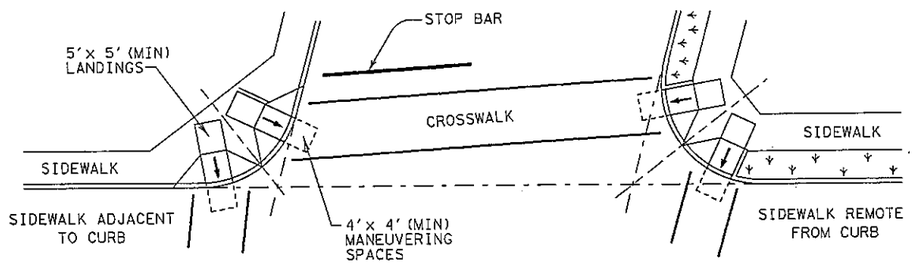

SKEWED INTERSECTION WITH "SMALL" RADIUS

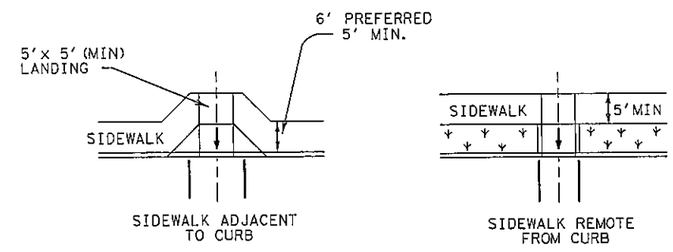

MID-BLOCK PLACEMENT
PERPENDICULAR RAMPS

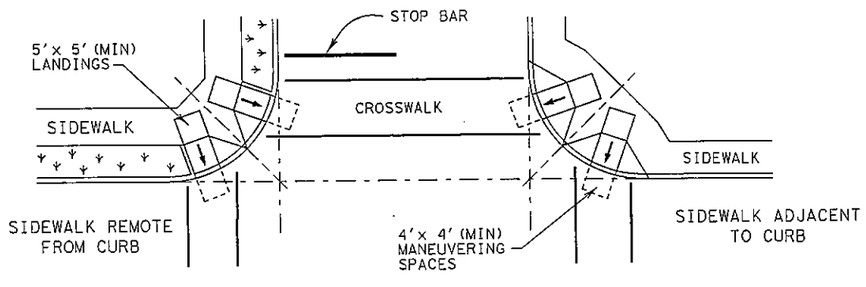

NORMAL INTERSECTION WITH "SMALL" RADIUS

TYPICAL CROSSING LAYOUTS

SHEET 4 OF 4

Texas Department of Transportation — Design Division Standard

PEDESTRIAN FACILITIES
CURB RAMPS

PED-12A

FILE: ped12a.dgn	DN: TxDOT	CK: RM	DW: TxDOT	CK: VP
© TxDOT March 2002	CONT	SECT	JOB	HIGHWAY
REVISIONS VP June 13, 2012	DIST		COUNTY	

REVISION | DATE

CITY OF TEXARKANA, TEXAS
220 Texas Blvd., Texarkana, Texas 75501 903-798-3846

PROJECT: STEP
DATE: Apr 22, 2014
DESIGNED BY: MLD
DRAWN BY: MLD
CHECKED BY: BKD
APPROVED BY: BKD

DETAILS
PED-05

STEP PROJECT
Dept. of Engineering & Infrastructure
City of Texarkana, Texas

DRAWING

Attachment: Exhibit 'B-2' STEP II Sheets 21-47 (1124 : Res No. 2014 - 067 R STEP Project II Downtown Sidewalk Enhancements DPW 14 - 02)

DISCLAIMER:
The use of this standard is governed by the "Texas Engineering Practice Act". No warranty of any kind is made by TxDOT for any purpose whatsoever. TxDOT assumes no responsibility for the conversion of this standard to other formats or for incorrect results or damages resulting from its use.

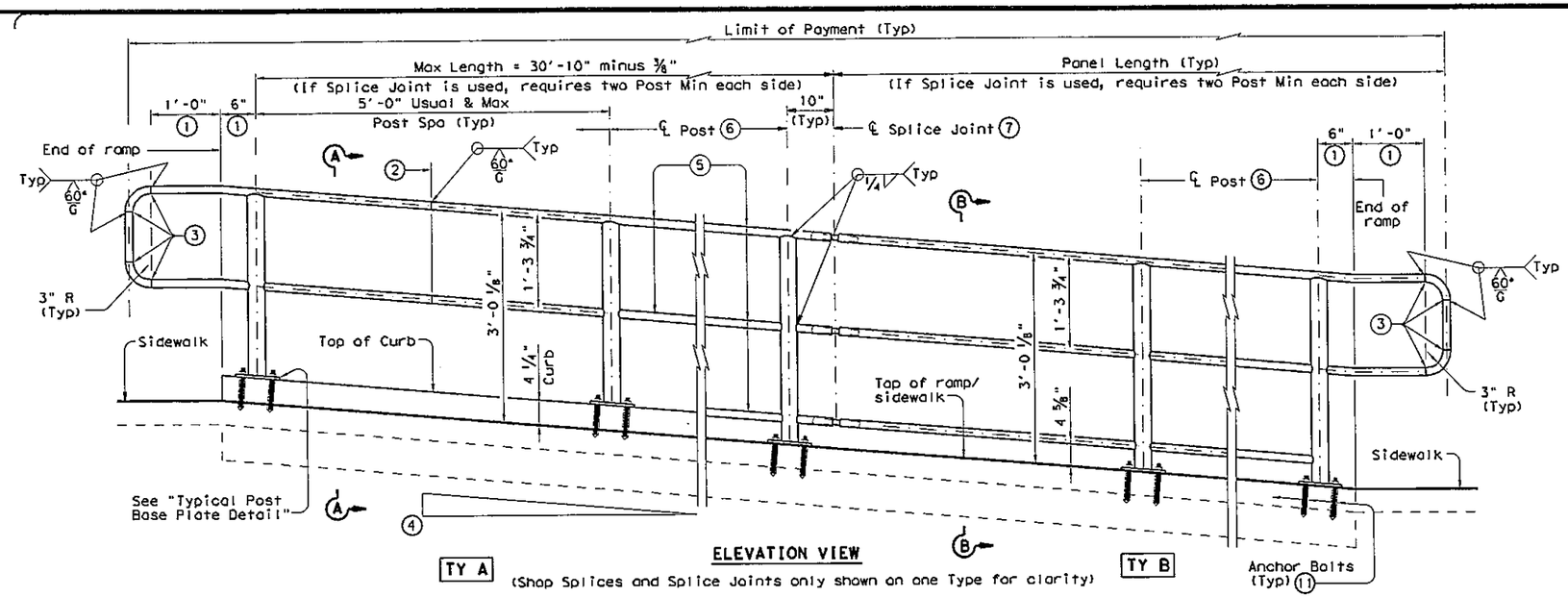

ELEVATION VIEW
(Shop Splices and Splice Joints only shown on one Type for clarity)

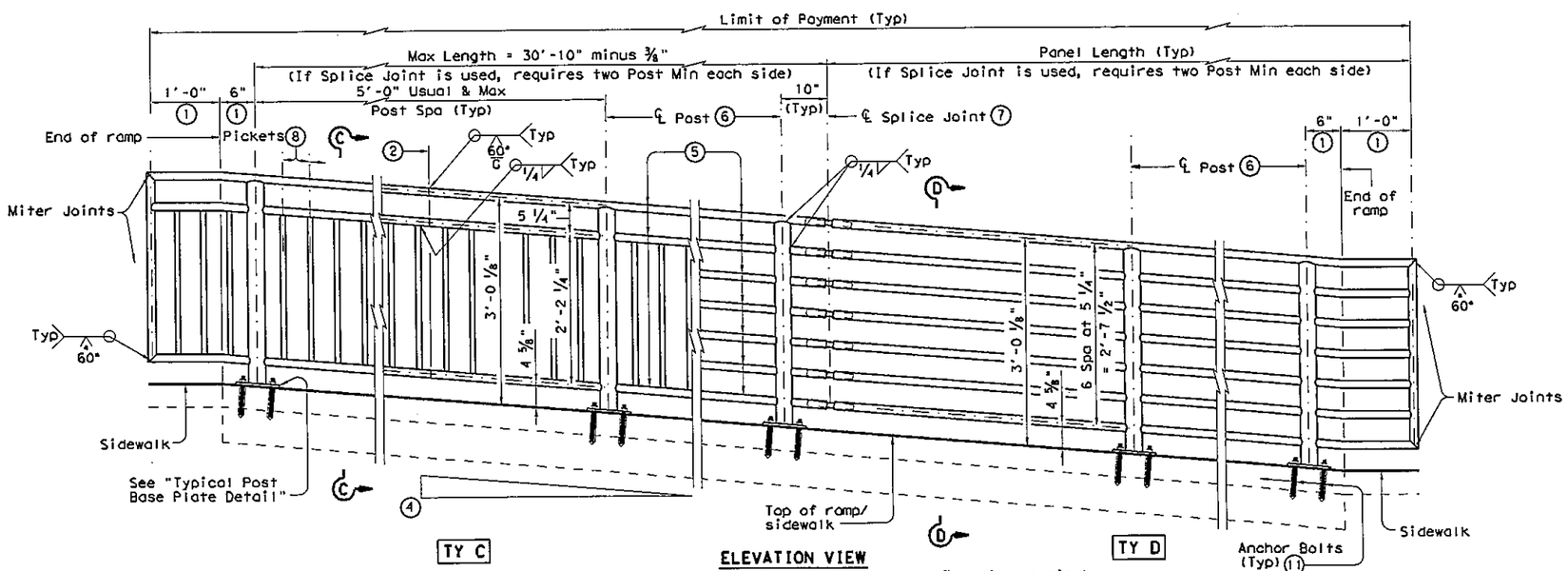

ELEVATION VIEW
(Shop Splices and Splice Joints only shown on one Type for clarity)

RECOMMENDED USAGE ⑨ ⑩	
Dropoff Height/ Condition	Recommended Rail Options
<30" dropoff	TY A, TY B, TY C, or TY D
≥ 30" dropoff, or along Bike Path	TY E or TY F

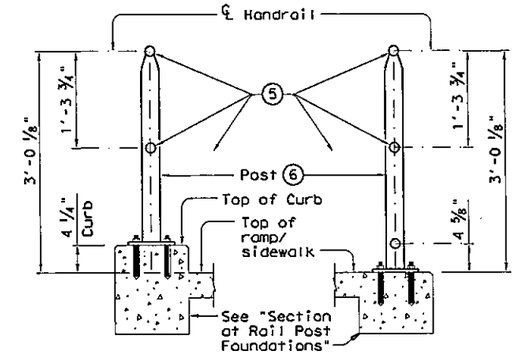

SECTION A-A
(Showing Handrail TY A)

SECTION B-B
(Showing Handrail TY B)

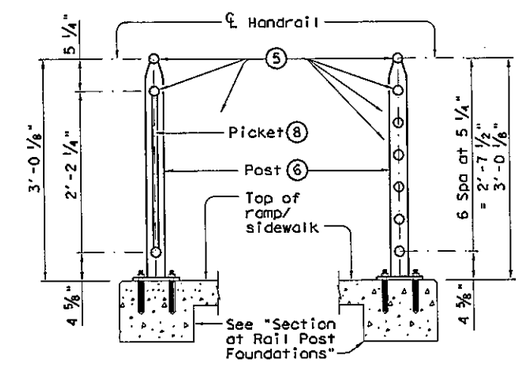

SECTION C-C
(Showing Handrail TY C)

SECTION D-D
(Showing Handrail TY D)

SHEET 1 OF 3

① Parallel to ground.

② One shop splice per panel is permitted with minimum 85 percent penetration. The weld may be square groove or single vee groove. Grind smooth.

③ Shop splice is permitted with minimum 85 percent penetration. The weld may be square groove or single vee groove. Grind smooth.

④ See Ramp Details located elsewhere in plans for ramp slope and dimensions. Maximum ramp slope will not exceed 8.3 percent. Level landing required for each 30" rise if grade exceeds 5 percent.

⑤ 1 ½" Dia. Standard Pipe (1.900" O.D., 0.145" wall thickness). Parallel to ramp / sidewalk. Provide holes as needed in 1 ½" Dia. pipe for galvanizing

⑥ 2 ½" Dia. Standard Pipe (2.875" O.D., 0.203" wall thickness). See "Post Mount Detail" for crimping and trimming post to fit Dia. of top rail. Provide holes as needed in post for galvanizing drainage and venting. Plumb all posts.

⑦ See "Handrail Fabrication Details" for Splice Joints.

⑧ ℄ ⅝" Dia. Round Bar equal spacing at 4 ½" Max. Plumb all pickets.

⑨ When needed for accessibility (grade > 5 percent) or as needed for pedestrian safety.

⑩ Not to be used on bridges.

⑪ See "General Notes" for anchor bolt information.

Texas Department of Transportation — Design Division Standard

PEDESTRIAN HANDRAIL DETAILS

PRD-13

FILE: prd13.dgn	DN: TxDOT	CK: AM	DW: JTR	CK: CGL
© TxDOT December 2006	CONT	SECT	JOB	HIGHWAY
REVISIONS REVISED MAY, 2013 (VP)	DIST		COUNTY	

REVISION | DATE

CITY OF TEXARKANA, TEXAS
220 Texas Blvd., Texarkana, Texas 75501 903-798-3948

PROJECT: STEP
DATE: Apr 22, 2014
DESIGNED BY: MLD
DRAWN BY: MLD
CHECKED BY: BKD
APPROVED BY: BKD

DETAILS PRD-13

STEP PROJECT
Dept. of Engineering & Infrastructure
City of Texarkana, Texas

DRAWING 32

Attachment: Exhibit 'B-2' STEP II Sheets 21-47 (1124 : Res No. 2014 - 067 R STEP Project II Downtown Sidewalk Enhancements DPW 14 - 02)

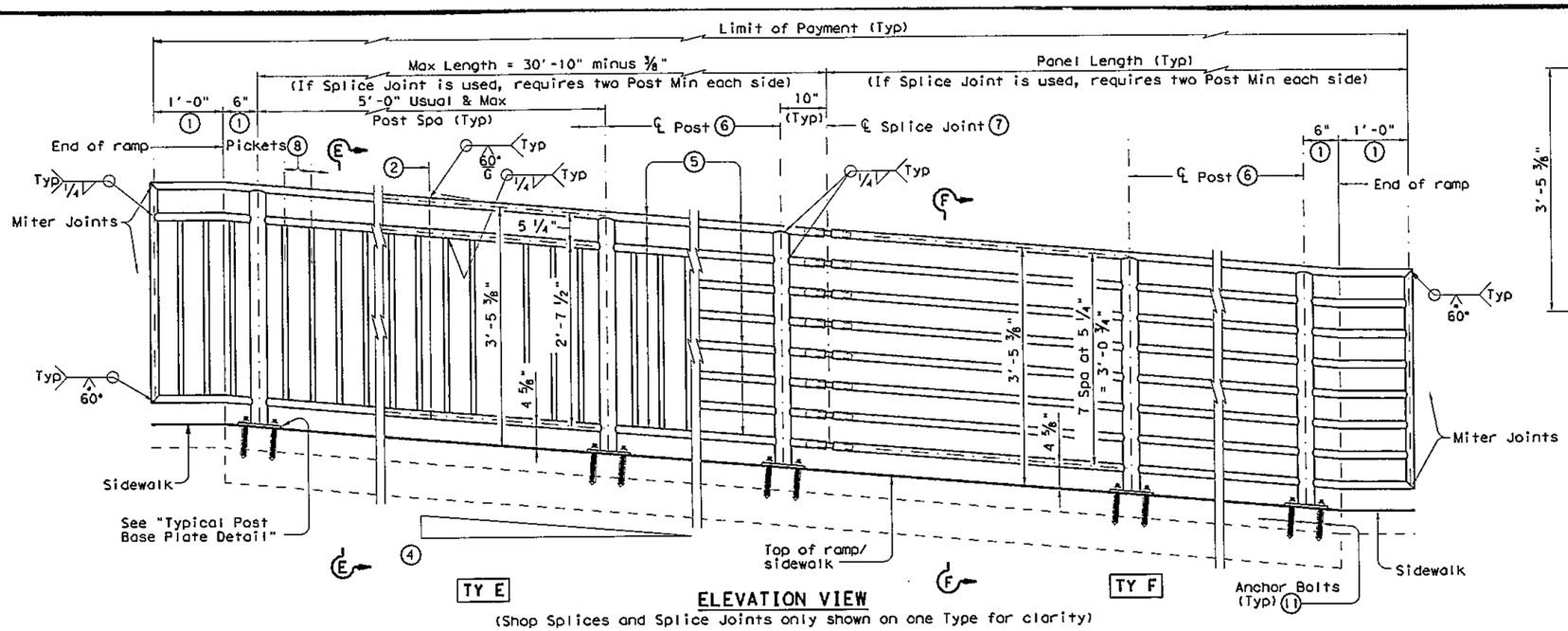

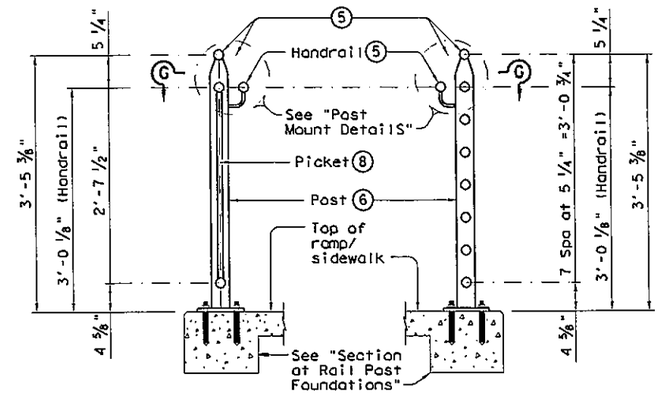

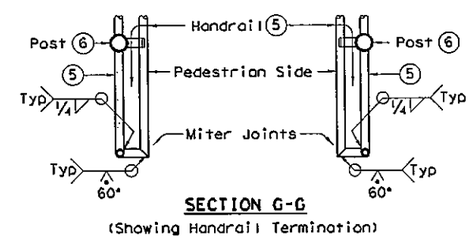

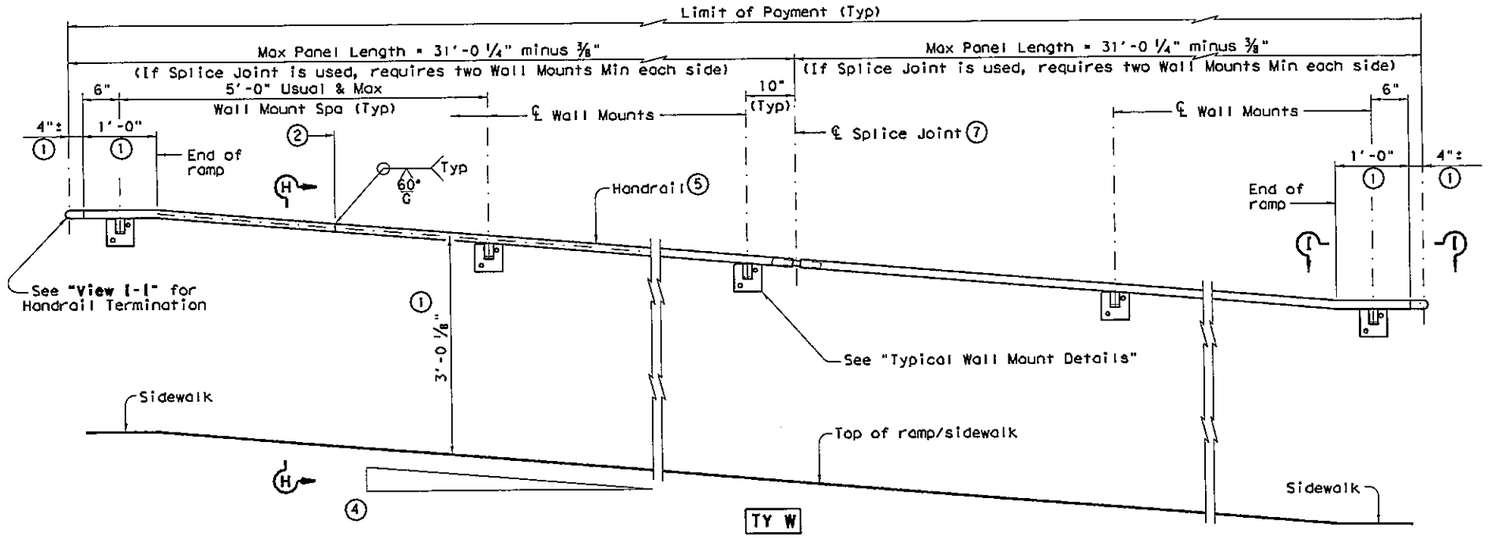

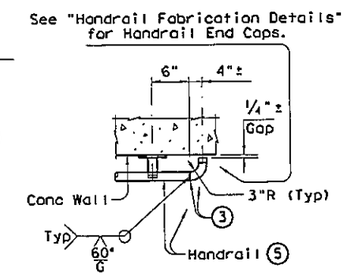

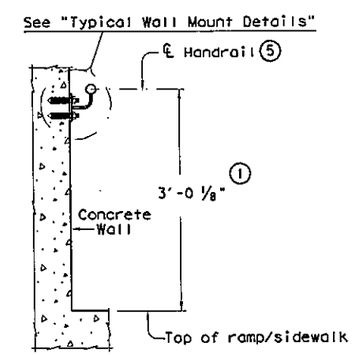

SHEET 2 OF 3

1. Parallel to ground.
2. One shop splice per panel is permitted with minimum 85 percent penetration. The weld may be square groove or single vee groove. Grind smooth.
3. Shop splice is permitted with minimum 85 percent penetration. The weld may be square groove or single vee groove. Grind smooth.
4. See Ramp Details located elsewhere in plans for ramp slope and dimensions. Maximum ramp slope will not exceed 8.3 percent. Level landing required for each 30" rise if grade exceeds 5 percent.
5. 1 1/2" Dia. Standard Pipe (1.900" O.D., 0.145" wall thickness). Parallel to ramp / sidewalk. Provide holes as needed in 1 1/2" Dia. pipe for galvanizing drainage and venting.
6. 2 1/2" Dia. Standard Pipe (2.875" O.D., 0.203" wall thickness). See "Post Mount Detail" for crimping and trimming post to fit Dia. of top rail. Provide holes as needed in post for galvanizing drainage and venting. Plumb all posts.
7. See "Handrail Fabrication Details" for Splice Joints.
8. ℄ 5/8" Dia. Round Bar equal spacing at 4 1/2" Max. Plumb all pickets.
11. See "General Notes" for anchor bolt information.

Texas Department of Transportation — Design Division Standard

PEDESTRIAN HANDRAIL DETAILS

PRD-13

FILE: prd13.dgn	DN: TxDOT	CK: AM	DW: JTR	CK: CGL	
© TxDOT December 2006	CONT	SECT	JOB	HIGHWAY	
REVISIONS REVISED MAY, 2013 (VP)	DIST		COUNTY		SHEET NO.

REVISION | DATE

CITY OF TEXARKANA, TEXAS
220 Texas Blvd., Texarkana, Texas 75501 903-798-3948

PROJECT: STEP
DATE: Apr 23, 2014
DESIGNED BY: MLD
DRAWN BY: MLD
CHECKED BY: BKD
APPROVED BY: BKD

DETAILS PRD-13

STEP PROJECT
Dept. of Engineering & Infrastructure
City of Texarkana, Texas

DRAWING
SHEET 33

Kind is made by TxDOT for its use only. Any other use or reproduction of this standard to other formats or for incorrect results or damages resulting from its use.

The use of this standard is governed by the "Texas Engineering Practice Act". No warranty of any kind is made by TxDOT for any purpose whatsoever. TxDOT assumes no responsibility for the conversion of this standard to other formats or for incorrect results or damages resulting from its use.

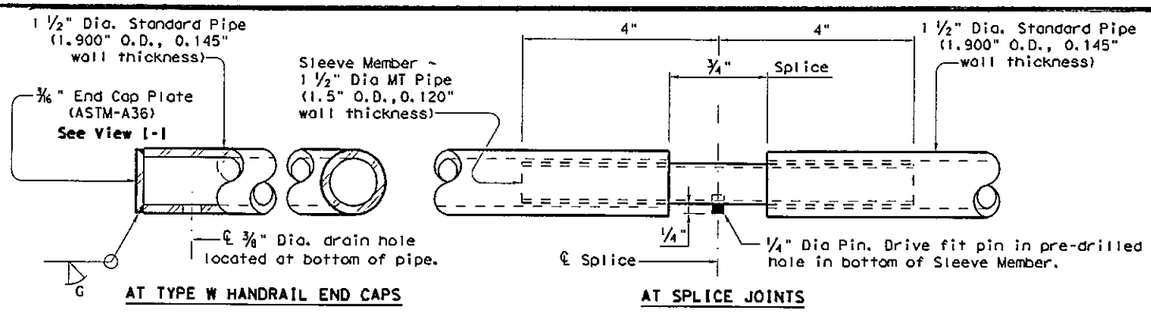

AT TYPE W HANDRAIL END CAPS

AT SPLICE JOINTS

HANDRAIL FABRICATION DETAILS

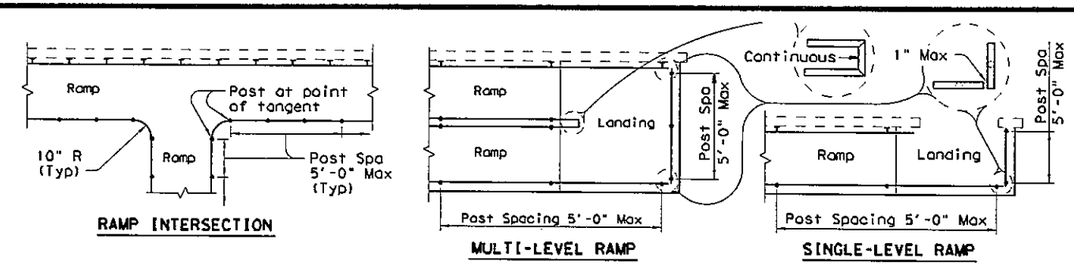

RAMP INTERSECTION

MULTI-LEVEL RAMP

SINGLE-LEVEL RAMP

PLAN SHOWING RAIL AT RAMP CONDITIONS

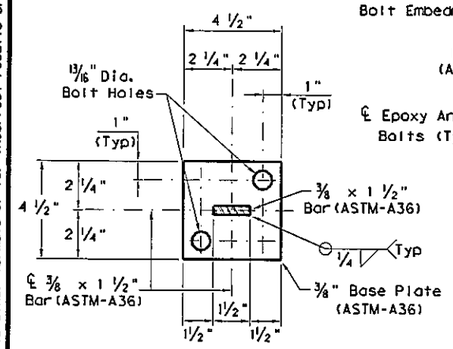

SECTION J-J
(Anchor Bolts not shown for clarity)

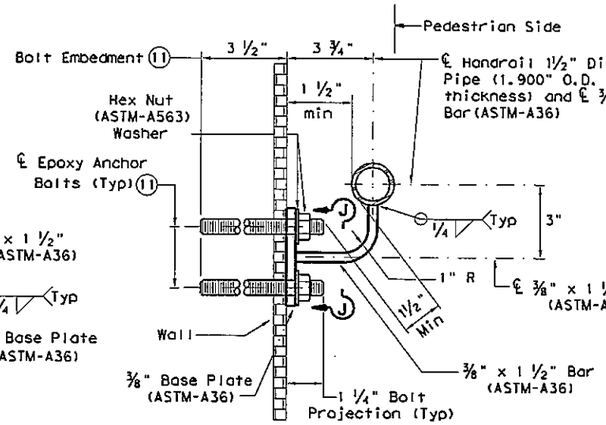

SECTION AT WALL MOUNT

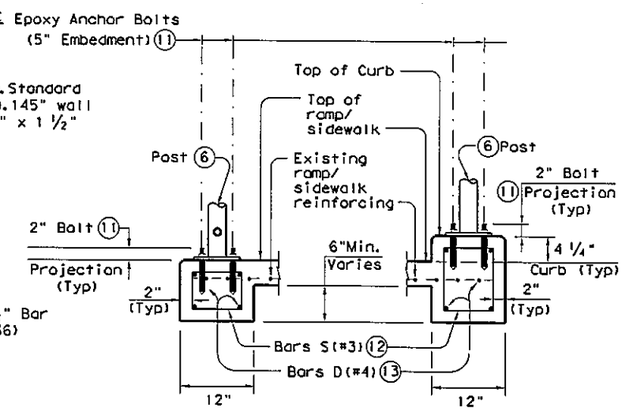

WITHOUT CURB

WITH CURB

SECTION AT RAIL POST FOUNDATIONS

TYPICAL WALL MOUNT DETAILS

GENERAL NOTES

Designed according to ADAAG, Texas Accessibility Standards, Uniform Building Code, and AASHTO LRFD Specifications.

Handrail anchorage details shown on this standard may require modification for select structure types. See appropriate details elsewhere in plans for these modifications.

Pipe will conform to ASTM-A53 Grade B or A500 Grade B. Steel plates and steel bars will conform to ASTM-A36. Mechanical tubing (MT) will conform to ASTM A513 Grade 1015 or higher. Galvanize all steel components except reinforcing steel unless noted otherwise.

Concrete for foundations will be in accordance with Item 531 "Sidewalks". All reinforcing steel must be Grade 60. Bar laps, where required, will be as follows: Uncoated ~ #4 = 1'-5" Epoxy coated ~ #4 = 2'-1"

When the plans require painted steel, follow the requirements for painting galvanized steel in Item 446, "Cleaning and Painting Steel". Sleeve Members will receive galvanization and only get field painted after installation unless directed otherwise by Engineer.

Epoxy Anchor bolts for wall mount and post base plate will be 5/8" Dia. ASTM A36 threaded rods with one hex nut and one hardened steel washer at each bolt. 5/8" Dia. threaded rod embedment depth for wall mounts is 3 ½" and embedment depth for post base plate is 5".

Embed threaded rods into concrete with a Type III (Class C) epoxy meeting the requirements of DMS-6100, "Epoxies and Adhesives". Mix and dispense adhesive with the manufacturer's static mixing nozzle/dual cartridge system. Core drill holes (percussion drilling not permitted).

At the contractor's option the post base plate anchor bolts may be cast with the Ramp/Sidewalk (See Cast-in-Place Anchor Bolt Options).

Optional cast-in-place anchor bolts will be 5/8" Dia ASTM A307 Grade A bolts (or A36 threaded rods with one tack welded hex nut each) with one hex nut and one hardened steel washer at each bolt. Embedment depth of cast-in-place bolt will be 8" for post base plate.

Handrails and any wall or other surface adjacent to them will be free of any sharp or abrasive elements.

Submit shop drawings to the Engineer unless otherwise noted. For curved handrail applications, fabricate the handrail to the curve if radius is less than 600 ft. Shop drawings are required when rail is fabricated to the curve.

For all handrails, erection drawings will be submitted to the Engineer for approval to ensure proper installation.

Drawings will show handrail mount locations with bolts setting, spacing, ramp slope, and/or splice joint locations, and handrail lengths with identification showing where each handrail goes on the layout.

Payment for concrete sidewalks or curb ramps will be paid for in accordance with Item 531 "Sidewalks".

Payment for all items shown is to be included in unit price bid in accordance with Item 450 "Railing" of the type specified.

All exposed edges will be rounded or chamfered to approximately 1/8" by grinding.

(5) 1 ½" Dia. Standard Pipe (1.900" O.D., 0.145" wall thickness). Parallel to ramp/sidewalk. Provide holes as needed in 1 ½" Dia. pipe for galvanizing drainage and venting.

(6) 2 ½" Dia. Standard Pipe (2.875" O.D., 0.203" wall thickness). Plumb all posts. See "Post Mount Detail" for crimping and trimming post to fit the diamenter of top rail. Provide holes as needed in post for galvanizing drainage and venting.

(11) See "General Notes" for anchor bolt information.

(12) Bars S(#3) spaced at 12" Max (Spaced 3" from outside edge of overall length of Ramp/Sidewalk).

(13) Provide 1 ½" end cover to Bars D(#4) from outside edge of overall length of Ramp/Sidewalk.

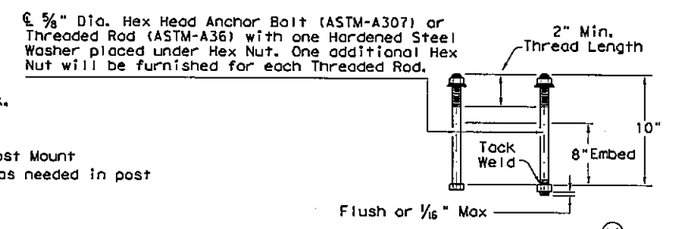

CAST-IN-PLACE (11) ANCHOR BOLT OPTIONS
(Used for Post Base Plate only)

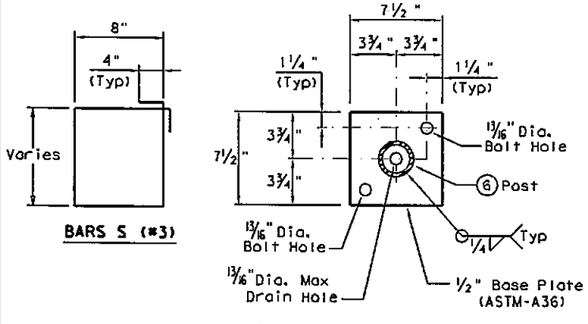

BARS S (#3)

TYPICAL POST BASE PLATE DETAIL

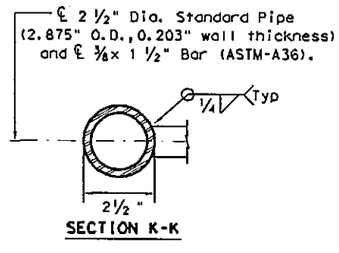

SECTION K-K

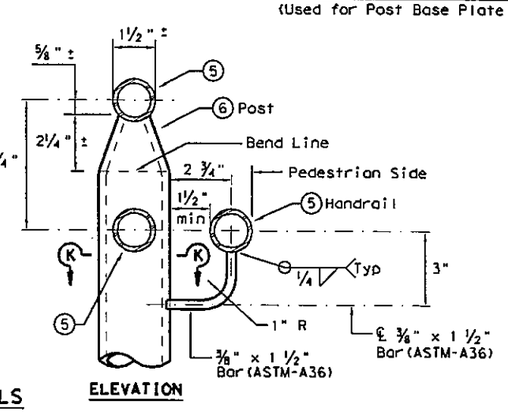

ELEVATION

POST MOUNT DETAILS

SHEET 3 OF 3

Texas Department of Transportation — Design Division Standard

PEDESTRIAN HANDRAIL DETAILS

PRD-13

FILE: prd13.dgn	DN: TxDOT	CK: AM	DW: JTR	CK: CGL	
© TxDOT December 2006	CONT	SECT	JOB	HIGHWAY	
REVISIONS REVISED MAY, 2013 (VP)	DIST		COUNTY		SHEET NO.

REVISION | DATE

CITY OF TEXARKANA, TEXAS
220 Texas Blvd., Texarkana, Texas 75501 903-798-3948

PROJECT: STEP
DATE: Apr 25, 2014
DESIGNED BY: MLD
DRAWN BY: MLD
CHECKED BY: BKD
APPROVED BY: BKD

DETAILS
PRD - 13

STEP PROJECT
Dept. of Engineering & Infrastructure
City of Texarkana, Texas

DRAWING

Attachment: Exhibit 'B-2' STEP II Sheets 21-47 (1124 : Res No. 2014 - 067 R STEP Project II Downtown Sidewalk Enhancements DPW 14 - 02)

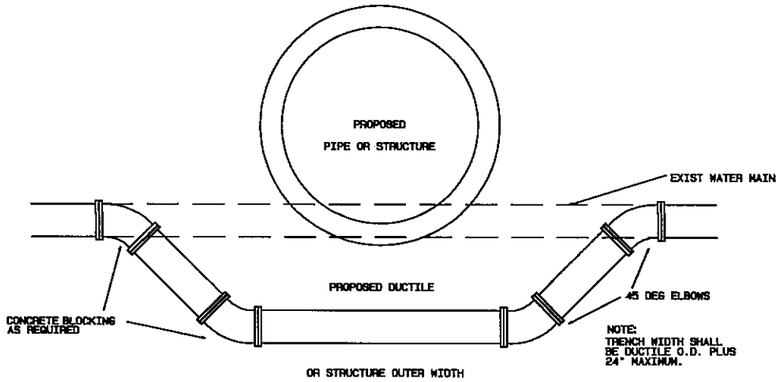

WATER MAIN LOWERING DETAIL

NOTE: FILL MATERIALS AND CONSTRUCTION METHODS SHALL CONFORM TO TEXARKANA WATER UTILITIES SPECS. AVAILABLE AT 8TH AND WOOD, ENG. DIV.

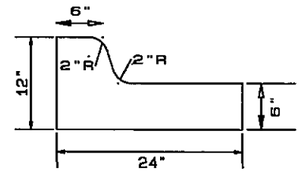

CURB & GUTTER TYPE II

NOT TO SCALE

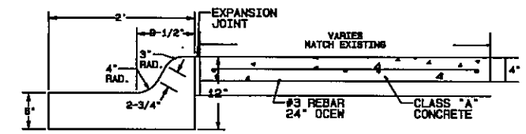

RAISED ISLAND DETAIL

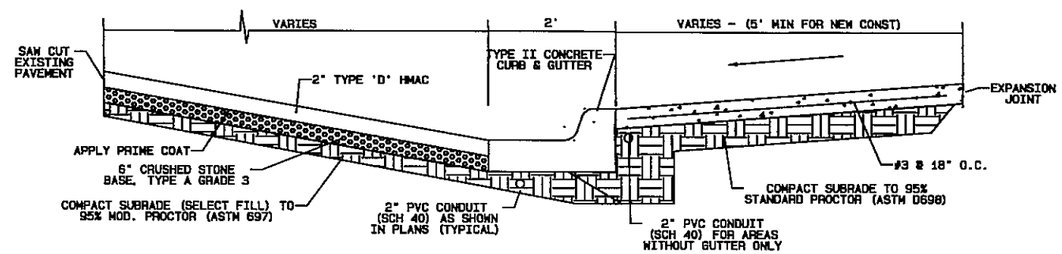

REQUIRES APPROVAL FOR USE BASED ON LOCATION

HMAC PAVING SECTION

NOT TO SCALE

BACKFILL LEGEND

BEDDING SHALL BE FIELD SAND SEE SPECIFICATIONS FOR BACKFILL REQUIREMENTS.

NOTE:
EXCAVATED MATERIAL MAY BE USED IN THE TRENCH BACKFILL, PROVIDED, (1) THAT ALL HARD ROCK AND STONES HAVING ANY DIMENSIONS GREATER THAN 6" IN DIAMETER AND FROZEN EARTH, DEBRIS AND ROOTS LARGER THAN TWO INCHES ARE REMOVED; AND (2) THE MATERIAL IS APPROVED BY THE OWNER.

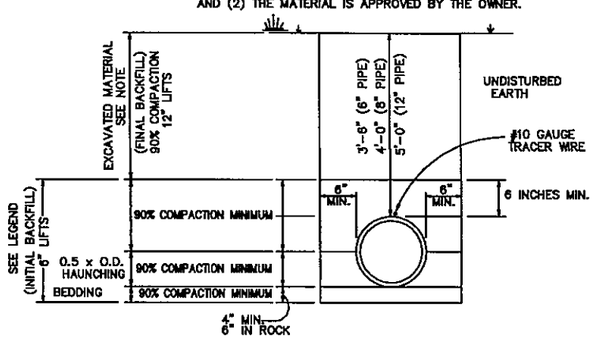

TRENCH SECTION– C900 PVC WATER PIPE

SCALE: NONE

CONSTRUCTION NOTES:

1. ALL CONCRETE SHALL BE CLASS 'A' CONCRETE UNLESS OTHERWISE SPECIFIED.
2. EXPANSION MATERIAL SHALL BE 3/4" PREFORMED FIBER.
3. GROOVE JOINTS SHALL BE LOCATED AT 15' INTERVALS ON ALL CURB AND GUTTER AND SHALL BE AT 4' INTERVALS ON ALL SIDEWALKS.
4. ALL WATER & SEWER PIPING UNDER EXISTING OR PROPOSED PAVEMENT SHALL BE DUCTILE IRON PIPE (DIP) APPROPIATELY LINED INTERNALLY, POLY WRAPPED EXTERNALLY, AND SHALL EXTEND 1' BEYOND THE EXISTING OR PROPOSED EDGE OF PAVEMENT OR BACK OF CURB ON BOTH SIDES.
5. ALL WATER PIPE NOT UNDER PAVEMENT SHALL BE PVC C-900.
6. ALL SEWER PIPE NOT UNDER PAVEMENT SHALL BE PVC SDR-26.
7. ALL STORM SEWER PIPE SHALL BE RCP TYPE III CL 76 WITH JOINTS WRAPPED IN FILTER FABRIC.
8. WORK DONE ON WATER OR WASTEWATER UTILITIES SHALL CONFORM TO TEXARKANA WATER UTILITIES SPECIFICATIONS OBTAINABLE AT 801 WOOD STREET IN ADDITION TO THE REQUIREMENTS SHOWN HEREIN.
9. SEED & FERTILIZE ALL DISTURBED AREAS AFTER FINAL GRADING.
10. RESIDENTS SHALL HAVE ACCESS TO THEIR PROPERTY AT ALL TIMES.

REVISION	DATE

CITY OF TEXARKANA, TEXAS
220 Texas Blvd., Texarkana, Texas 75501 903-798-3948

PROJECT: STEP
DATE: Apr 22, 2014
DESIGNED BY: MLD
DRAWN BY: MLD
CHECKED BY: BWD
APPROVED BY: BWD

MISC. DETAILS 2

STEP PROJECT
Dept. of Engineering & Infrastructure
City of Texarkana, Texas

DRAWING

Attachment: Exhibit 'B-2' STEP II Sheets 21-47 (1124 : Res No. 2014 - 067 R STEP Project II Downtown Sidewalk Enhancements DPW 14 - 02)

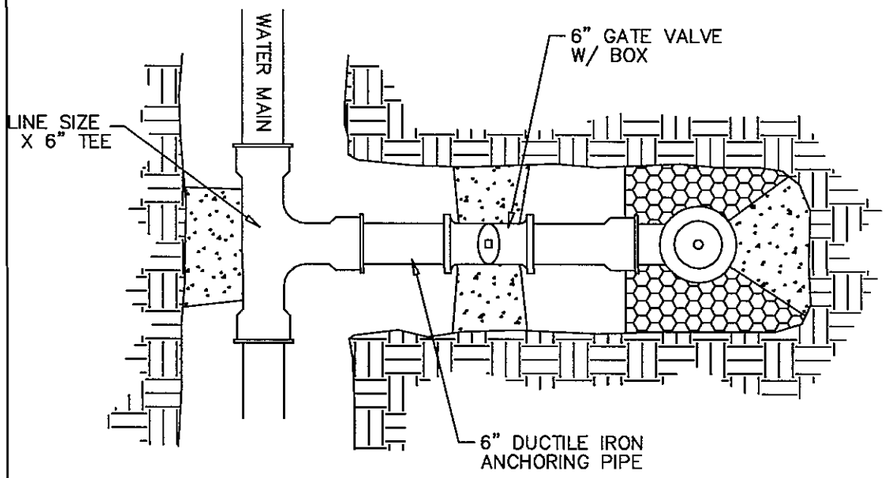

PLAN

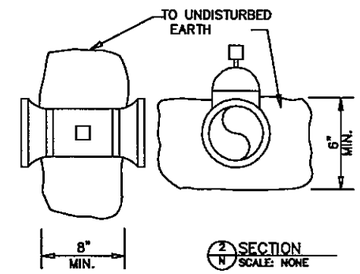

NOTE: THIS DETAIL APPLIES TO ALL GATE VALVES.

VALVE RESTRAINT
SCALE: NONE

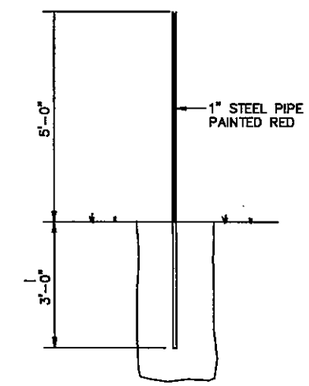

VALVE MARKER
SCALE: NONE

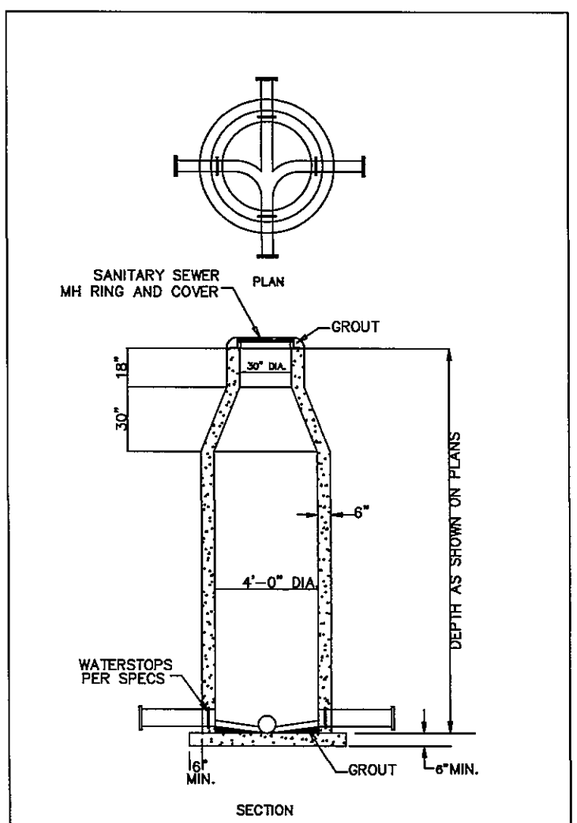

STANDARD SANITARY SEWER MANHOLE
SCALE: NONE

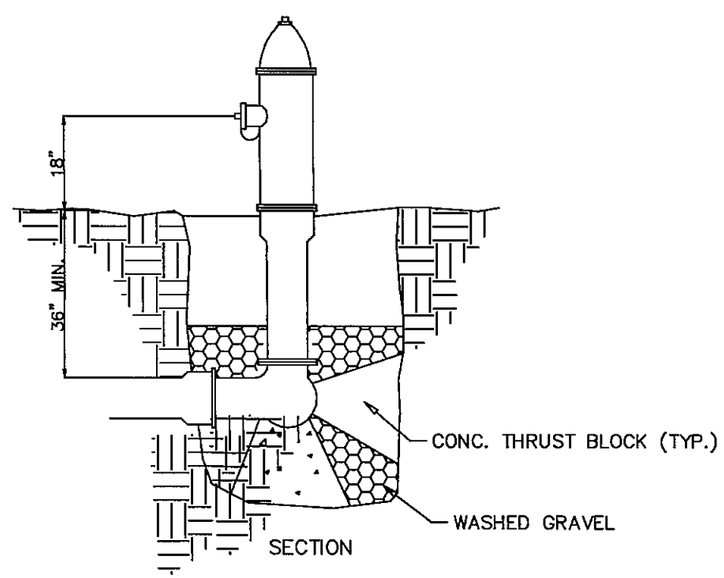

FIRE HYDRANT SETTING
SCALE: NONE

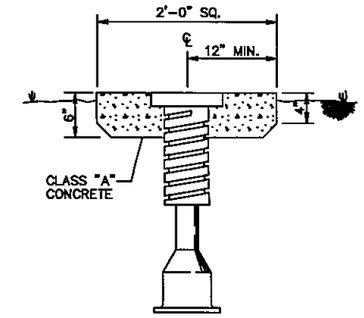

VALVE BOX SETTING
SCALE: NONE

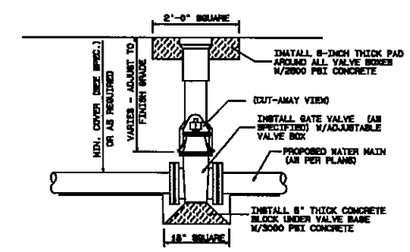

TYPICAL GATE VALVE INSTALLATION
SCALE: NONE

STATE OF TEXAS
MASHEUL HOLDAPOL
108541
LICENSED
PROFESSIONAL ENGINEER
1/23/14

REVISION	DATE

CITY OF TEXARKANA, TEXAS
220 Texas Blvd., Texarkana, Texas 75501 903-798-3946

PROJECT: STEP
DATE: Apr 22, 2014
DESIGNED BY: MLD
DRAWN BY: MLD
CHECKED BY: BWD
APPROVED BY: BWD

DETAILS
WATER

STEP PROJECT
Dept. of Engineering & Infrastructure
City of Texarkana, Texas

DRAWING

Attachment: Exhibit 'B-2' STEP II Sheets 21-47 (1124 : Res No. 2014 - 067 R STEP Project II Downtown Sidewalk Enhancements DPW 14 - 02)

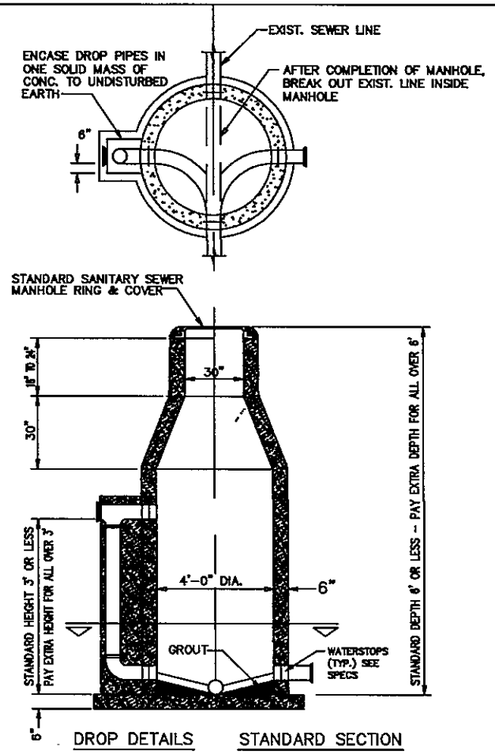

MANHOLE OVER EXIST. PIPE
SCALE: NONE

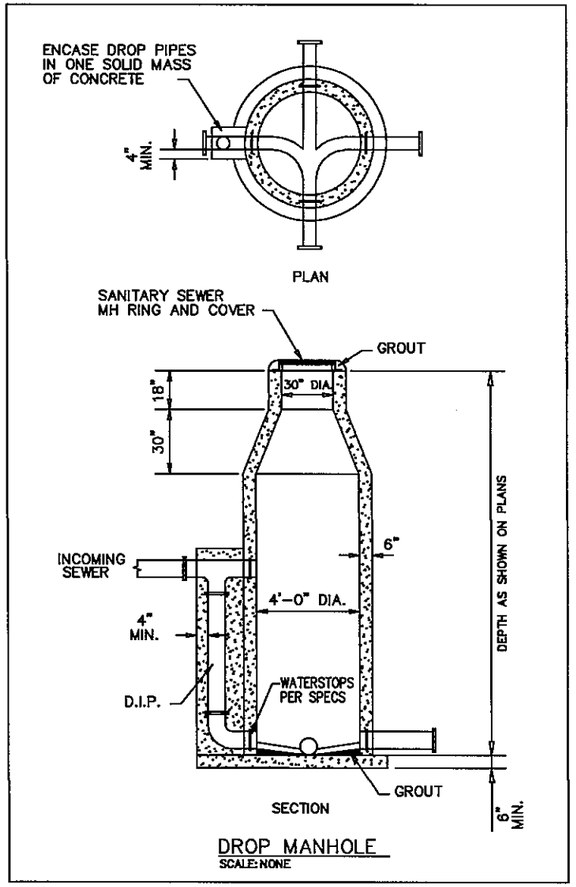

DROP MANHOLE
SCALE: NONE

NOTE: PLACE A MINIMUM OF SIX INCHES OF CLASS 2 GRAVEL OR FIELD SAND UNDER ALL MANHOLES FOR A DISTANCE OF TWELVE INCHES OUTSIDE FOOTING OF MANHOLE.

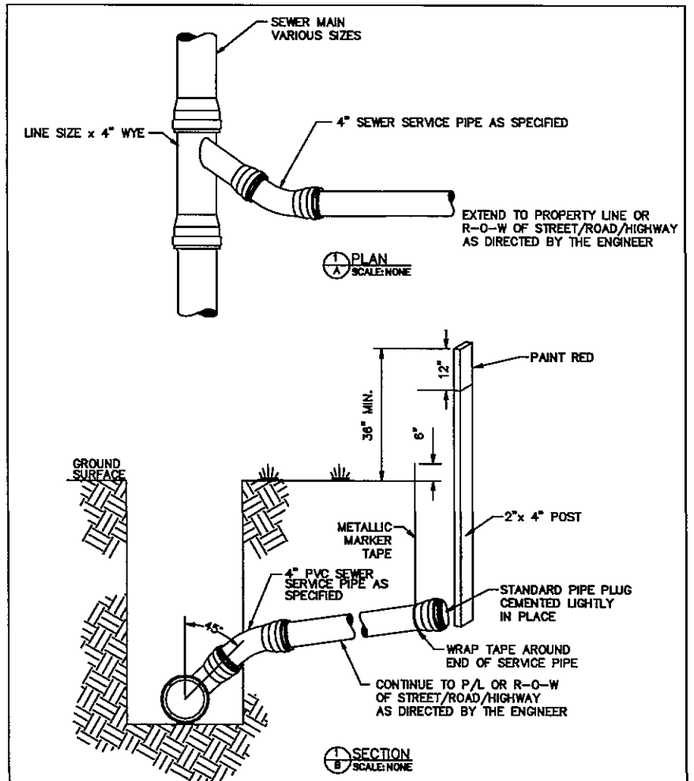

1 TYPICAL SEWER SERVICE LINE
SCALE: NONE

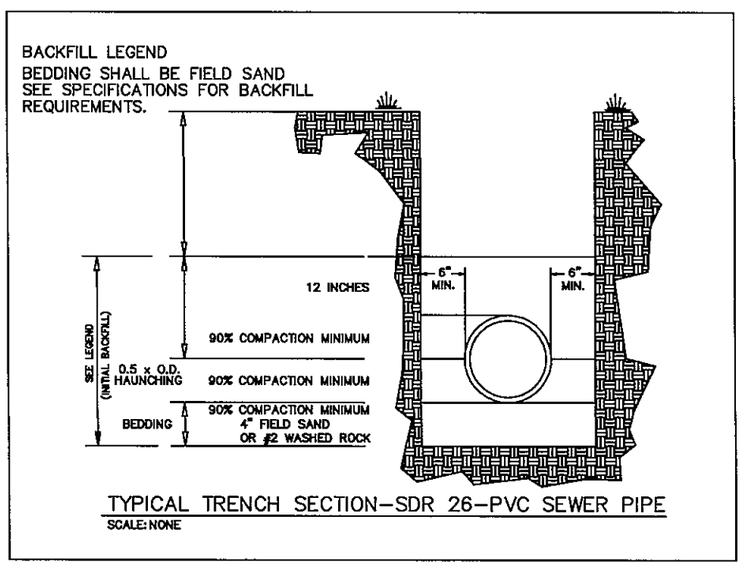

TYPICAL TRENCH SECTION–SDR 26–PVC SEWER PIPE
SCALE: NONE

REVISION	DATE

CITY OF TEXARKANA, TEXAS
220 Texas Blvd., Texarkana, Texas 75501 903-798-3846

PROJECT: STEP
DATE: Apr 22, 2014
DESIGNED BY: MLD
DRAWN BY: MLD
CHECKED BY: BWD
APPROVED BY: BWD

DETAILS-WATER

STEP PROJECT
Dept. of Engineering & Infrastructure
City of Texarkana, Texas

DRAWING

Attachment: Exhibit 'B-2' STEP II Sheets 21-47 (1124 : Res No. 2014 - 067 R STEP Project II Downtown Sidewalk Enhancements DPW 14 - 02)

Scale: 1"=20'

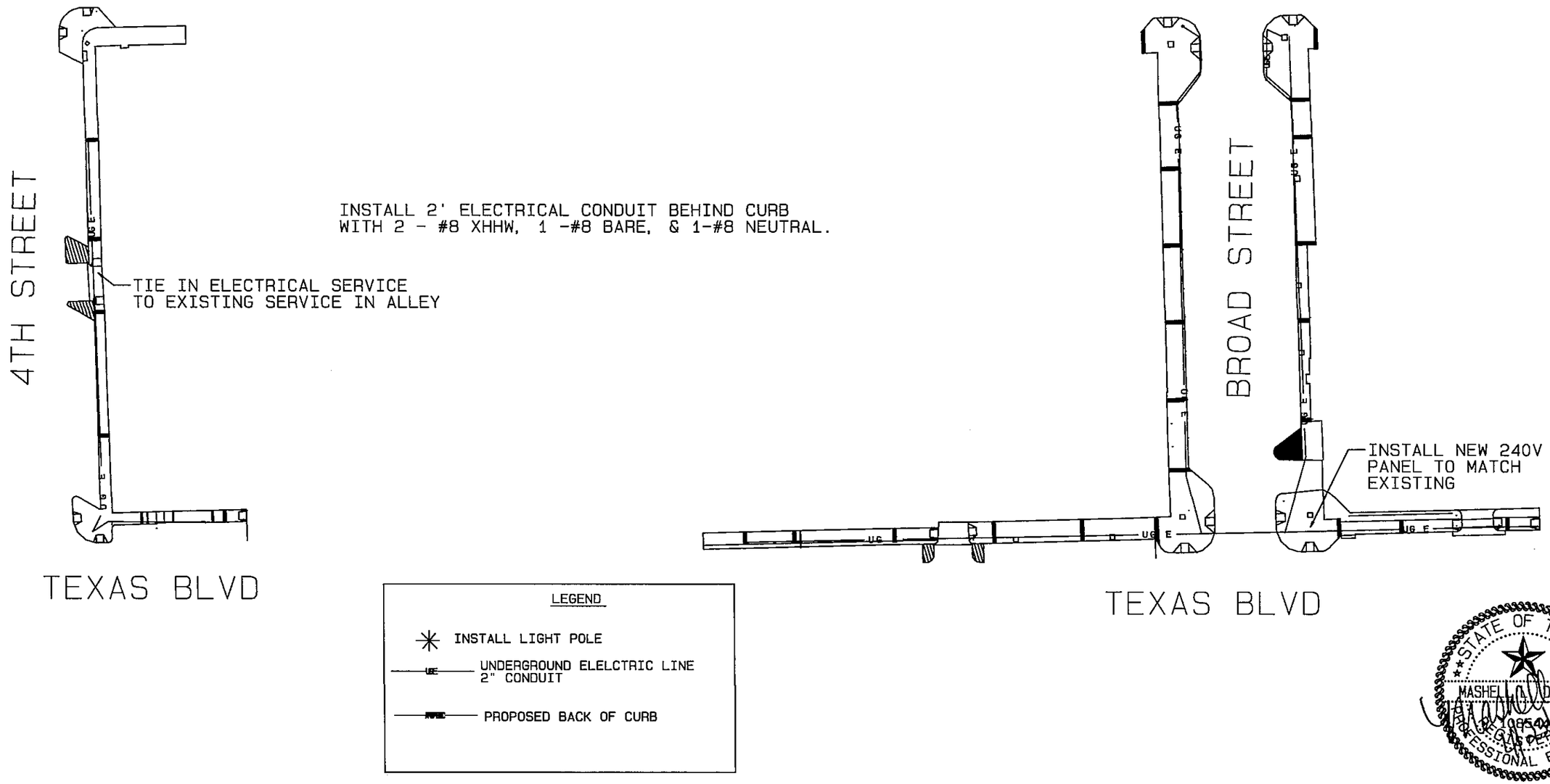

REVISION	DATE

CITY OF TEXARKANA, TEXAS
220 Texas Blvd., Texarkana, Texas 75501 903-798-3848

PROJECT: STEP
DATE: Apr 22, 2014
DESIGNED BY: MLD
DRAWN BY: MLD
CHECKED BY: BWD
APPROVED BY: BWD

LIGHTING PLAN

STEP PROJECT
Dept. of Engineering & Infrastructure
City of Texarkana, Texas

DRAWING

Attachment: Exhibit 'B-2' STEP II Sheets 21-47 (1124 : Res No. 2014 - 067 R STEP Project II Downtown Sidewalk Enhancements DPW 14 - 02)

DISCLAIMER: The use of this standard is governed by the "Texas Engineering Practice Act". No warranty of any kind is made by TxDOT for any purpose whatsoever. TxDOT assumes no responsibility for the conversion of this standard to other formats or for incorrect results or damages resulting from its use.

I. GENERAL REQUIREMENTS FOR ALL ELECTRICAL WORK

The location of all conductors, conduits, junction boxes, ground boxes, and electrical services is diagrammatic only and may be shifted by the Engineer to accommodate local conditions.

Materials shall be new and unused. Materials and installation shall comply with the applicable provisions of the National Electrical Code (NEC), National Electrical Manufacturers Association (NEMA) standards, and shall be Underwriters Laboratories (UL) Listed unless otherwise shown on the plans or specifications or approved by the Engineer in writing. Faulty fabrication or poor workmanship in any material, equipment, or installation shall be justification for rejection. When reference is made to UL, it can be considered to mean a Nationally Recognized Independent Testing Lab (NRTL). Comparable standards of Canadian Standard Association, Electrical Testing Laboratories or Factory Mutual can be equal to the referenced UL standard. Where reference is made to NEMA listed devices, IEC listed devices shall not be considered to be an acceptable equal to a NEMA listed device. Acceptable devices may have both a NEMA and IEC listing.

With the exception of high strength bolts, miscellaneous nuts, bolts and hardware may be stainless steel when plans specify galvanized, provided that bolts are 1/2 inch or less in diameter. The Contractor shall provide the following electrical test instruments as required by the Engineer to confirm compliance with the contract and the NEC. Those test instruments are voltmeter, amp probe, megger (1000 volt DC) and torque wrenches. All meters shall have been properly calibrated within one year. Calibration certification shall be provided to the Engineer upon request. Calibration certification tag shall also be applied to the meter. The Contractor shall operate meters during inspection as requested by the Engineer. Grounding shall be as shown on the plans and in accordance with the NEC. Metallic conduit, light poles, luminaires on bridge structures, and all metal enclosures shall be bonded to the system-grounding conductor. The ground rod in each ground box or junction box at the bridge ends, and in each ground box installed for underpass lighting will also be bonded to the system grounding conductor. The grounding conductor shall be bare or, if insulated, shall be green. Ground rods, connectors, and bonding jumpers will not be paid for separately, but will be subsidiary to the various bid items.

SUBMITTALS:

The contractor shall submit for approval six (6) copies of catalog cut sheets for each of the following three (3) categories.
Category 1. Electrical services including photocell.
Catagory 2. Breakaway disconnects, heat shrink tubing, heat shrink filler tape, GelCaps and ground boxes which will include loading capacity certification.
Category 3. Highmast assembly kits, when applicable. See Item 614 "Highmast Illumination Assemblies". Submittals shall be legible and shall be marked to indicate which product on a cut sheet is to be supplied. Where manufacturers provide warranties and guarantees as a customary trade practice, the Contractor shall furnish to the State such warranties and guarantees.
Any deviation from plans or specifications, including deviations due to plan error should be prominently displayed on the submittal. Any changes not prominently noted in submittal and incorporated into the work without proper authorization will constitute grounds for rejection of that portion of the work.

II. CONDUIT

A. MATERIALS

1. Conduit and fittings shall be UL Listed for the intended use shown on plan sheets.
2. Conduit shall be the type shown by descriptive code or shown elsewhere on the plans. Substitution of the various types of conduits will not be permitted. All flexible conduit in rigid metallic conduit (RMC) systems shall be Liquidtight Flexible Metal (LFMC) conduit. All flexible conduit in PVC systems shall be Liquidtight Flexible Non-metallic conduit (LFNC).
3. All exposed conduits shall be RMC, unless otherwise specifically shown on the plans. All metal conduit shall be properly grounded.
4. Couplings, connectors, conduit bodies, grounding bushings, and offset nipples for RMC shall be electro-zinc plated steel or hot dipped galvanized malleable iron, threaded or threadless compression type, rain-tight and shall be UL listed for the intended use.
5. Expansion joints for metal conduit shall be provided with an internal or external bonding jumper and shall be UL listed.
6. Unless otherwise shown on the plans, junction box minimum sizes shall be in accordance with the following table which applies to the greatest number of conductors entering the box through one conduit with no more than four conduits per box. When a mixture of conductor sizes are present, the conductors shall be counted as if all are of the larger size. Situations not applicable to the table shall be sized in accordance with NEC 370-28.

AWG	3 CONDUCTORS	5 CONDUCTORS	7 CONDUCTORS
#1	10" x 10" x 4"	12" x 12" x 4"	16" x 16" x 4"
#2	8" x 8" x 4"	10" x 10" x 4"	12" x 12" x 4"
#4	8" x 8" x 4"	10" x 10" x 4"	10" x 10" x 4"
#6	8" x 8" x 4"	8" x 8" x 4"	10" x 10" x 4"
#8	8" x 8" x 4"	8" x 8" x 4"	8" x 8" x 4"

7. RMC system junction boxes equal to or smaller, in any dimension, than 12 x 12 x 6 (HxWxD), surface mounted and containing conductors #8 or larger, shall be hot dipped galvanized cast iron with minimum wall thickness of 3/16 inch, shall have external mounting lugs, and shall be UL listed Crouse-Hinds Type WAB, OZ/Gedney Type YS or approved equal. Unless otherwise shown elsewhere on the plans, RMC system junction boxes larger than the aforementioned boxes but equal to or smaller, in any dimension, than 18 x 18 x 6 (HxWxD) shall be 14-ga. stainless steel; RMC system junction boxes larger than 18 x 18 x 6 (HxWxD) shall be 12-ga. stainless steel. All metal junction boxes shall be equipped with a threaded hole or lug for grounding. Stainless steel boxes 12 x 12 x 6 and larger need not be UL Listed but shall meet the other requirements of the NEC and shall have ribs, stiffeners, or thicker metal and shall have external mounting feet. Junction boxes with an internal volume of more than 100 cu. in. may be supported by connection of two or more rigid metal conduits, where specifically shown on the plans or where approved by the Engineer.
8. Junction boxes containing only #10 or #12 AWG conductors shall be Crouse Hinds Type GRFX, Appleton Type JBOX, two-gang FD, or similar approved cast iron box. Boxes shall be sized according to NEC Table 370-16(a).
9. IMC and EMT conduit shall not be used unless specifically required by the plan layout sheets. Junction boxes in EMT conduit systems shall be made from galvanized sheeting and shall be UL listed and approved for outdoor use, unless otherwise noted on the plans. Sheet metal junction boxes shall be sized in accordance with the NEC. Junction boxes for IMC conduit systems shall meet the requirements of boxes used with RMC systems.
10. Junction boxes in PVC conduit systems shall be PVC, intended for outdoor use, unless otherwise noted on the plans.
11. Elbows in PVC conduit systems one inch and larger shall be rigid metal, with the exception of traffic signal systems which may have PVC elbows instead of rigid. If any part of the rigid metal elbow is buried less than 18 inches underground the elbow and rigid metal extension shall be grounded. Grounding shall be accomplished by means of a grounding bushing installed on the extension. Unless specifically shown on the plans, rigid metal elbows containing, or entering ground boxes containing only communications conductors, loop detectors, or other low voltage power limited circuits need not be grounded unless a ground wire is present in the conduit or ground box. The rigid metal elbows located in concrete foundations may be extended with PVC conduit and need not be grounded provided that the end of the elbow nearest the end of the conduit run exiting the foundation is at least 2 inches below the concrete. RMC elbows will not be eliminated. RMC elbows will not be paid for directly, but will be subsidiary to various bid items.
12. High-Density Polyethylene (HDPE) conduit shall meet the requirements of Item 622, Duct Cable, except that the HDPE conduit, when bid under Item 618, Conduit, shall not contain factory installed conductors. Fittings for HDPE conduit shall be UL listed as an electrical conduit connector or shall be thermally fused using an electrically heated wound wire resistance welding method. HDPE conduit may be substituted for bored schedule 40 or schedule 80 PVC conduit. When such substitution is made, bored HDPE shall be schedule 40 of the size PVC being replaced. The HDPE conduit shall transition to PVC (or RMC elbow when required) at the bore pit. Size and schedule shall be as shown on the plans. Substituted conduit may not be extended to ground boxes or foundations; RMC elbows shall be installed at ground boxes and foundations. RMC elbows will not be eliminated.
13. All conduit support hardware including straps, nuts, bolts, screws, retaining anchors and washers shall be hot dipped galvanized or stainless steel. Strut type conduit straps shall be stainless steel or hot dipped galvanized. Strut type straps need not be made of malleable type material. Stamped-cadmium plated straps will not be allowed. Straps having only one mounting hole shall not be allowed for use on conduits 2 inches and larger with the exception of electrical service poles where stainless steel standoff straps will be allowed. Two piece conduit straps designed to be used with a mounting shoe shall be installed only with the correctly sized shoe.

B. CONSTRUCTION METHODS

1. Conduit in structures shall have expansion fittings at structure expansion joints. All straight runs of RMC conduit exposed on structures such as bridges shall have expansion joints installed at maximum intervals of 150 feet. Expansion joints shall be installed so they allow for movement of the conduit. Installation of the joint in such a manner that will not allow for movement shall be repaired at no expense to the state. The method of determining the final setting length of the expansion joint shall be provided to the Engineer upon request.
2. Conduit supports shall be spaced at maximum intervals of 5 feet. Conduit spacers shall be used with metal conduit placed on surfaces of concrete structures (See conduit mounting options).
3. Conduit supports shall not be attached directly to prestressed concrete beams except as shown specifically in the plans and approved by the Engineer.
4. Unless otherwise shown on the plans, conduit placed beneath existing roadways, driveways, or sidewalks, or after the base or surfacing operation has begun, shall be accomplished by jacking or boring. The Contractor shall back fill and compact the bore pits to the bottom of the conduit prior to installing connecting conduit or duct cable to prevent bending of the connection.
5. Conduit trenched in the subgrade of new roadways shall be backfilled with excavated material, unless otherwise noted on the plans. Conduit trenched in the sub-base of new roadways shall be backfilled with cement-stabilized base.
6. Open ends of all conduit and raceways shall be fitted with temporary caps or plugs to prevent entry of dirt, debris and rodents during construction. The temporary cap may be constructed of duct tape, but in all cases shall be tightly fixed to the conduit and shall be durable. The contractor shall clean out the conduit and prove it clear in accordance with Standard Specifications Item 618.3 prior to installing any conductors.
7. Conduit entry into the top of enclosures such as safety switches, meter cans, service enclosures, auxiliary enclosures and junction boxes shall be made weatherproof using conduit sealing hubs, or threaded bosses.
8. A bonding jumper shall be installed from each grounding bushing to the nearest grounding rod, grounding lug, and/or equipment grounding conductor. All jumpers shall be the same size as equipment grounding conductor. Conduit used as casing under roadways for duct cable need not be grounded if duct extends full length through the casing. At electrical services, grounding electrode conductor shall be a solid Copper #6 AWG.
9. Metal junction boxes shall be bonded to the grounding conductor in accordance with the NEC.
10. Conduits entering ground boxes shall be placed so that the conduit ends shall be not less than 3 inches nor more than 6 inches from bottom of box (See ground box detail on sheet ED(3).
11. Conduit ends shall be sealed with heat shrink boots with waterproof sealant, urethane foam, or by other methods approved by the Engineer. Sealing shall be done after completion of any required pull tests. Duct tape shall not be used as a permanent conduit sealant. Silicone caulking shall not be used as a sealant.
12. All strut mounting material and hardware shall be hot-dip galvanized or shall be stainless steel. The cut ends of strut and non-galvanized rigid metal conduit threads shall be coated with a zinc rich paint (90% or more zinc content). Zinc rich paint may only be used to touch up galvanized material as allowed under item 445.6 galvanizing. The painting of non-galvanized material with a zinc rich paint shall not be considered as an approved alternative for galvanized materials.
13. All PVC conduit terminations shall be fitted with bushings or bell ends. All metal conduit terminations shall be fitted with a grounding type bushing.

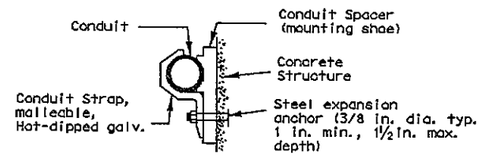

CONDUIT MOUNTING OPTIONS

(Attachment to concrete surfaces)
(See para. II.B.2)

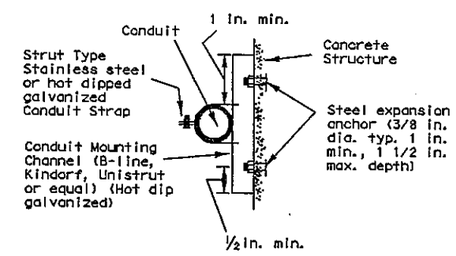

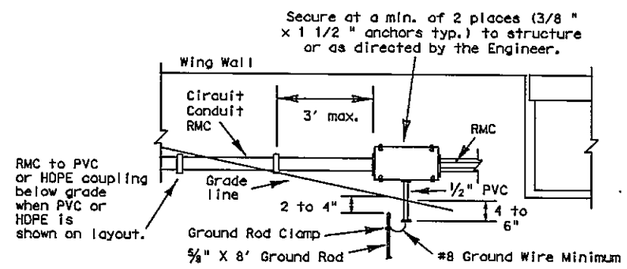

TYPICAL CONDUIT ENTRY TO BRIDGE STRUCTURE DETAIL

NOTES

1.) Ground rod clamp to be UL listed for direct burial.
2.) For conduit placed in structure, use flush-mounted box.
3.) Bond junction box and metal conduits to equipment grounding conductor and grounding electrode conductor using listed connector.
4.) Seal all conduits entering the junction box from underground.
5.) Install bell end or bushing on 1/2 " PVC conduit both ends.
6.) Ground rod to be driven within 8 inches of 1/2 inch PVC conduit end.

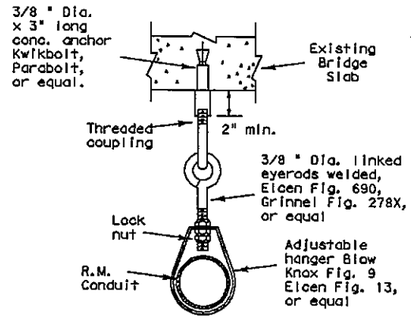

CONDUIT HANGER DETAIL

(Attachment to horizontal surfaces)
Hangers need not be UL listed for electrical use
Ier plumber pipe hangers are acceptable

5/03 Revision

1 Revised notes.

Texas Department of Transportation
Traffic Operations Division

ELECTRICAL DETAILS-
CONDUIT

ED(1)-03

©TxDOT January 1992

REVISIONS
4-98
12-00
3-03
5-03

FILE TXDOT	CK: TXDOT	DN: TXDOT	CK: TXDOT
COUNTY	SECT	JOB	HIGHWAY
DIST	COUNTY		SHEET NO.

71A

DATE:
FILE:

CITY OF TEXARKANA, TEXAS
220 Texas Blvd., Texarkana, Texas 75501 903-798-3940

REVISION | DATE

PROJECT: STEP
DATE: Apr 22, 2014
DESIGNED BY: MLD
DRAWN BY: MLD
CHECKED BY: BWD
APPROVED BY: BWD

ELECTRICAL DETAILS

STEP PROJECT
Dept. of Engineering & Infrastructure
City of Texarkana, Texas

DRAWING

Attachment: Exhibit 'B-2' STEP II Sheets 21-47 (1124 : Res No. 2014 - 067 R STEP Project II Downtown Sidewalk Enhancements DPW 14 - 02)

Attachment: Exhibit 'B-2' STEP II Sheets 21-47 (1124 : Res No. 2014 - 067 R STEP Project II Downtown Sidewalk Enhancements DPW 14 - 02)

I. ELECTRICAL CONDUCTORS

A. MATERIALS

1. Insulated conductors shall be NEC Type XHHW. Insulated conductors shall be color coded in accordance with the NEC, articles 200, 250, and 310; i.e. Insulation of grounded conductors (neutrals) shall be white. Grounding conductors (ground wires) shall be bare or insulation shall be green. Insulation of ungrounded conductors (hots) shall be any color except green, white, or gray. Identification of conductors #6 American Wire Guage (AWG) and smaller shall be by continuous jacket color. Color coding of electrical conductors #4 AWG and larger shall be either by continuous color jacket or by colored tape. Colored tape marker shall consist of a half-lap of tape covering a 6-inch length of conductor.
2. Where two or more circuits are present in one conduit or enclosure, the conductors of each circuit shall be identified by a permanent non-metallic tag at each accessible location. The tag shall be fastened to the conductors by two plastic straps. Each tag shall indicate circuit number, letter, or other identification shown in the plans.
3. Grounding electrode conductor #6 AWG for bonding to ground rod at electrical service, shall be solid. Connection of conductor to ground rod shall be made using UL Listed connectors designed for such purposes.
4. Heat Shrink Tape filler shall be used to seal the ends of heat shrink tubing around two or more conductors that are insulated with heat shrink tubing. Tape material shall have a minimum dielectric strength of 225 volts per mil and shall be cross-linked butyl rubber. Tape shall be supplied in rolls and shall have a backing (release paper) to prevent the tape from sticking to itself.
5. Heat shrink tubing shall be heavy wall, UL listed for 600 volts or greater and shall have factory applied internal sealant.
6. GelCaps shall be UL listed for 600-volt applications. GelCap shall have see-through elastomer molded cover. Cover shall be filled with high dielectric insulating gel silicone sealant to provide waterseal. Cover shall be held in place by snap-lock, molded clamp made of UV stable polypropylene.
7. Splicing materials, insulating materials, breakaway disconnects, GelCaps and fuse holders will not be paid for directly but shall be subsidiary to various bid items.

B. CONSTRUCTION METHODS

1. After conductors have been installed in conduit, a pull test shall be made on conductors. When any length of conductor cannot be freely pulled, the Contractor shall make any needed alterations or repairs at no expense to the State.
2. The Contractor shall perform insulation resistance tests in accordance with Item 620, "Electrical Conductors." The Contractor shall coordinate with the Engineer to witness the tests.
3. A sufficient length of conductor for making up connections shall be left in ground boxes (2 feet minimum, 3 feet maximum, to point of splice, 3 feet minimum, 4 feet maximum, when conductor is pulled through with no splice), enclosures, weatherheads and pole bases (1 foot minimum, 1.5 feet maximum).
4. Splices shall be made only in junction boxes, ground boxes, pole bases, or electrical enclosures and shall be made with listed compression or screw type pressure connectors, terminal blocks, bolted lugs, or split bolt connectors. Splices shall be insulated with heavy wall heat shrink tubing or GelCaps and shall be made so as to provide a watertight splice. Heat shrink sleeve shall overlap conductor insulation a minimum of 2 inches on both sides of the splice. Where heat shrink tubing may not shrink sufficiently to provide a watertight seal around the individual conductors, prior to heating the tubing, the Contractor shall increase the diameter of the conductors insulation using heat shrink filler tape to provide a watertight seal between the individual conductors and the heat shrink tubing. Tape shall be visible after completion of all splices. Where filler tape is used but not visible, the Engineer shall approve each individual splice by conducting a physical inspection of each splice. When it appears the tubing has been burned, or overheated the tubing shall be considered to be defective and shall be replaced.
5. GelCaps when used in place of heat shrink method of splicing, shall be sized and installed according to manufacturer's specifications. (Raychem GelCap and GelCap SL or equal.)
6. Wire nuts may be used for #8 AWG or smaller conductors in above-ground junction boxes, but not in pole bases or ground boxes. Wire nuts shall be positioned upright to prevent the accumulation of water. Wire nuts used at these locations shall have factory applied waterproof sealant.
7. Conductors in illumination poles shall be supported by a J-hook in the top of the pole.
8. All conductors bid under Item 620 "Electrical Conductors" shall have breakaway electrical disconnects installed anytime conductors pass through a break-away support device.
9. For terminating the conductors, insulation-jacketing material shall be removed in such a manner as to not nick any of the individual strands of the conductor. When individual conductor strands are removed, the conductor shall be considered to be damaged.
10. When a conductor or cable has been damaged, or fails to pass an insulation resistance test, the conductor shall be replaced.
11. Duct tape, black electrical tape, or wire nuts shall not be used in the repair of a damaged conductor.
12. For terminations, no more than one wire may be installed under a single pressure connector, unless the device is listed for more than one wire.
13. Conductors connected to break-away in line fuse holders must be installed in accordance with the specific manufacturer's installation instructions. Where threaded connections are made, they shall be properly torqued. Where crimp type connections are made, crimps shall be made using properly sized crimping pliers. Proper conductor terminations are critical to the safe operation of break-away devices.
14. Waterproofing boots shall be properly trimmed to fit snugly around the conductor so as to provide a water proof connection. No more than one wire may enter a single opening in any one boot. Water proofing boots must provide the correct number of openings. Where only one wire is to be connected to a boot, the boot may not be a two wire type.

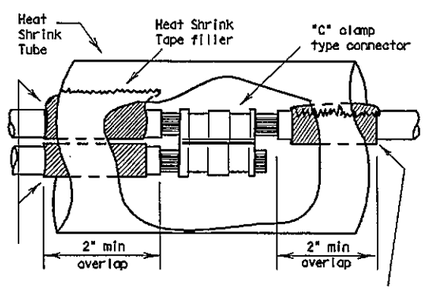

SPLICE OPTION 1

C-CLAMP

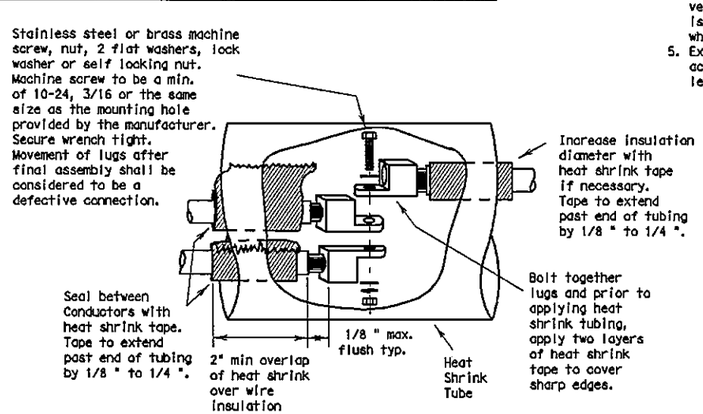

SPLICE OPTION 2

BOLTED WIRE LUGS

SPLICE OPTION 3

SPLIT BOLT

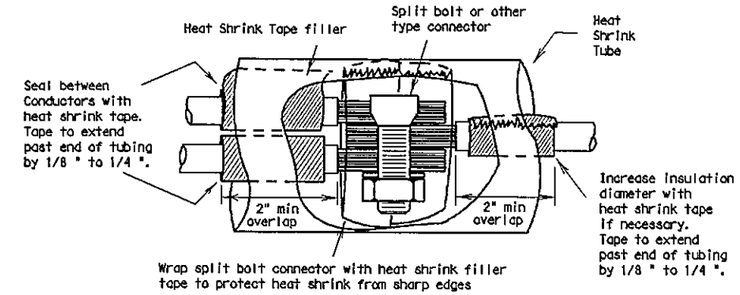

SPLICE OPTION 4

GELCAP

GelCap shall be sized and installed according to manufacturers specifications

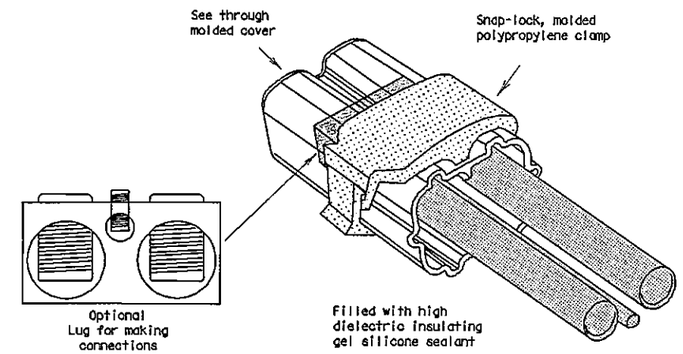

15. All conduits that contain circuit wiring of 50 volts or more shall contain an equipment grounding conductor (EGC). Conduit for traffic signals shall have an EGC, with a minimum size of #8 AWG stranded. Unless otherwise shown on the plans, the EGC for all other conduits shall be the same AWG size as the largest current carrying conductor contained in that conduit. The EGC shall be paid for Item 620-Electrical Conductors.

C. TEMPORARY WIRING

1. Temporary conductors and electrical equipment to provide power for utilization equipment, shall be installed in accordance with the NEC article 305. All temporary wiring materials and methods shall comply with the standard sheets. All power outlets for portable electrical equipment, power tools, ice machines, ice storage bins and refrigerators located outdoors at grade, supplied from a utility power source, shall be provided with a ground fault circuit interrupter.
2. Residual current protective devices (GFCI) may be any one of the following: molded cord and plug set, receptacle, or circuit breaker type.
3. Where wire nuts are approved for temporary wiring, they shall be of the self-sealing type.
4. All conductor splices must be contained within a listed enclosure, ground box or the splices will be more than ten feet above grade vertically and more than five feet horizontally from any metal structure. Where temporary conductors are installed in any area that is likely to be subjected to vehicle traffic, or mobile construction equipment, the vertical clearance to ground shall be at least 18 feet when measured at the lowest point. Where power conductors are to be supported by a span wire, the span wire shall be properly grounded.
5. Existing conduit containing service conductors uncovered during the construction process shall be repaired in a timely manner in accordance with the NEC. Existing non-metallic conduit exposed during construction shall not be left exposed above grade, or with less than eighteen inches of cover, without protective methods approved by the Engineer.

Texas Department of Transportation
Traffic Operations Division

ELECTRICAL DETAILS-
CONDUCTORS

ED(2)-03

©TxDOT January 1992

DN: TXDOT	CK: TXDOT	DW: TXDOT	CK: TXDOT
CONT	SECT	JOB	HIGHWAY
DIST	COUNTY		SHEET NO.

REVISIONS
10-93
4-98
12-00
3-03

71B

REVISION | DATE

CITY OF TEXARKANA, TEXAS
220 Texas Blvd., Texarkana, Texas 75501 903-798-3848

PROJECT: STEP
DATE: APR 28, 2014
DESIGNED BY: MLD
DRAWN BY: MLD
CHECKED BY: MLD
APPROVED BY: BKD

ELECTRICAL DETAILS

STEP PROJECT
Dept. of Engineering & Infrastructure
City of Texarkana, Texas

DRAWING

kind is made by TxDOT for any purpose whatsoever. TxDOT assumes no responsibility for the conversion of this standard to other formats or for incorrect results or damages resulting from its use.

FILE:

Kind is made by TxDOT for any purpose whatsoever. TxDOT assumes no responsibility for the conversion of this standard to other formats or for incorrect results or damages resulting from its use.

II. GROUND RODS

A. MATERIALS

1. All ground rods installed at electrical services, including supplemental lightning protection ground rods specified by the plans in other locations such as pole bases, shall be copper clad and UL listed. Rods shall be a minimum diameter of 5/8 inch. The length shall be a minimum of 8 feet. Larger diameter or longer length rods may be called for in some specific locations, see the individual plans sheets.
2. Ground rod clamps shall be listed to be in direct contact with the soil. Where concrete encasement is required, the clamp shall be listed for concrete encasement.

B. CONSTRUCTION METHODS

1. Ground rods installed in locations such as pole bases, to provide supplemental lightning protection need not be totally in contact with the soil. Where called for in the plans, rods may be encased in soil or concrete or any combination of soil and concrete. When concrete encased, the connection of the conductor to the rod shall be readily accessible for inspection or repairs. When driven into the soil the upper end shall be between 2 to 4 inches below finished grade. Ground rods shall not be placed in the same drilled hole as a timber pole.
2. Ground rods shall be installed such that the end imprinted with the rod's part number is installed as being the upper end.
3. Non-conductive coatings such as concrete splatter shall be removed from the rod at the clamp location.
4. Routing of lightning protection ground rod wires shall be run as short and straight as possible. Where bends are required they shall have a minimum radius of four inches.
5. Unless specifically called for by the plans, conduits used for ground rod wires shall be non-metallic. Where metal conduits are specified, a grounding bushing and properly sized bonding jumper shall be provided and properly installed on each end.
6. Where rocky soil or a solid rock bottom is encountered when driving a ground rod and the horizontal trench placement method is the only viable solution, written authorization from the Engineer must be obtained.

III. GROUND BOX

A. MATERIALS

1. Ground boxes 16x30x24 inches (WxLxD) or smaller shall be polymer concrete of the type required by the descriptive code shown elsewhere. Larger ground boxes shall be as shown elsewhere in the plans.
2. All ground boxes and covers shall be permanently marked either by impress or by permanent ink, with manufacturer's model number and manufacturer's name or logo.
3. Covers shall be bolted down, and bolt holes in the box shall be arranged to drain dirt.
4. Ground box Types A, B, C, D & E shall meet the following requirements:
   a. Ground boxes and covers be manufactured from polymer concrete reinforced with continuous strands of woven or stitched borosilicate fiberglass cloth. The polymer concrete shall be made from catalyzed polyester resin, sand and aggregate, and shall have a minimum compressive strength of 11,000 psi. Polymer concrete containing chopped fiberglass or fiberglass reinforced plastic is not acceptable.
   b. Minimum inside dimensions shall be as follows (width x length x depth):
      Type A shall be 11.5 inches x 21 inches x 10 inches, (122311)
      Type B shall be 11.5 inches x 21 inches x 20 inches, (122322)
      Type C shall be 15.25 inches x 28.25 inches x 10 inches, (162911)
      Type D shall be 15.25 inches x 28.25 inches x 20 inches, (162922)
      Type E shall be 11.5 inches x 21 inches x 16 inches, (122317)
   c. Bottom edge of box or extension shall be footed with a minimum 1 1/4 inch flange.
   d. Ground boxes shall withstand 600 lbs. per sq. ft. applied over the entire sidewall with less than 1/4 inch deflection per foot length of box. Ground boxes and covers shall withstand a test loading of 20,000 lbs. over a 10 inch by 10 inch area centered on the cover with less than 1/2 inch deflection. Ground boxes and covers shall meet Western Underground Standards 3.6. Manufacturer shall supply certification by an independent laboratory or sealed by a Texas-Licensed Professional Engineer.
   e. Covers shall be 2 inch (nominal) thick polymer concrete. All hardware shall be stainless steel. Cover shall be secured with two 1/2 inch stainless steel bolts. Bolts shall be self-retaining and shall withstand a minimum of 70 ft-lbs. torque and shall have a minimum 750 lbs. straight pull out strength. Nuts shall be floating and shall provide a minimum of 1/2 inch movement from the center of the nut. Covers shall be skid resistant, minimum 0.5 coefficient of friction. Covers shall be interchangeable between manufacturers and shall conform to the dimensions shown herein. Unless otherwise approved by the Engineer, cover shall be legibly imprinted with the following words in minimum 1 inch letters:
      Ground Boxes containing wiring for traffic signals shall be labeled, Danger High Voltage Traffic Signal.
      Ground boxes containing wiring for illumination systems shall be labeled, Danger High Voltage Illumination.
      Ground boxes containing wiring for traffic management systems shall be labeled, Danger High Voltage Traffic Management.
      Ground boxes containing wiring for sign illumination systems shall be labeled, Danger High Voltage Sign Illumination.
      Ground boxes containing wiring for traffic signals that also contain illumination, powered by the signal electrical service, shall be labeled, Danger High Voltage Traffic Signal.

B. CONSTRUCTION METHODS

1. Ground boxes shall be set on a 9 inch (minimum) bed of aggregate from 3/4 " up to 2" in size. Aggregate shall be in place prior to setting box and conduits shall be capped. Any gravel or dirt in conduit shall be removed.
2. When required by Item descriptive code, construction of an apron encasing a ground box including concrete and reinforcing steel shall not be paid for directly but shall be subsidiary to the ground box. Reinforcing steel may be field bent. Concrete for aprons shall be considered miscellaneous concrete for testing purposes. Aprons shall be cast in place.
3. Conduit holes may be cut in the walls of type B & D boxes at least 18 inches beneath the cover.
4. If, within the limits of this project, the Contractor must utilize an existing ground box equipped with a metal cover, the Contractor shall bond the cover to the grounding conductor with a 3 foot long flexible stranded jumper the same size as the grounding conductor. Connection of bonding jumper to metal ground cover shall not be paid for directly but shall be subsidiary to various bid items. The box(es) must be clearly shown on the plans with plan notes fully describing the work required.
5. If there are other ground boxes with metal Covers within the project limits but not involved in the contract, the Engineer may direct the Contractor to ground the covers, designating and identifying the specific boxes in writing. This work will be paid for separately.
6. Termination to metal ground box covers shall be made using a tank ground type lug.

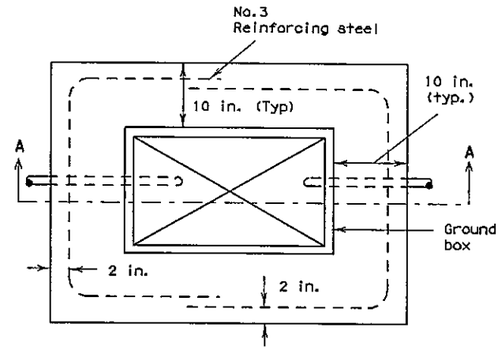

PLAN VIEW

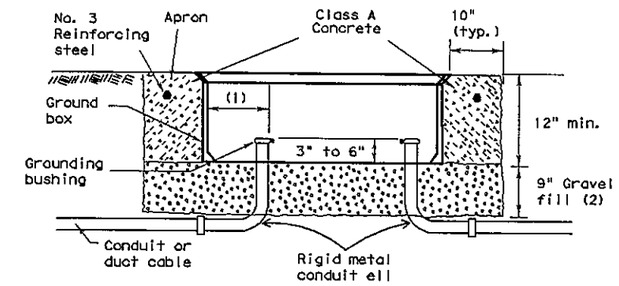

SECTION A - A

APRON FOR GROUND BOXES

(Where required)

(1) Final position of end of conduit shall not exceed one-half the distance to the side of box opposite the conduit entry.
(2) Place gravel "under" the box, not "in" the box. Gravel should not encroach on the interior volume of the box.
(3) Install bushing on the upper end of all ells.
(4) Where a ground rod is present in the ground box, connect it to any and all equipment grounding conductors using a listed connector.
(5) Maintain sufficient space between all conduits so as to allow for proper installation of bushings.
(6) All conduits shall be installed in a neat and workmanlike manner.
(7) All conduits installed in the ground box shall be sealed after completion of conductor installation and any required pull tests. Silicone shall not be used as sealant.

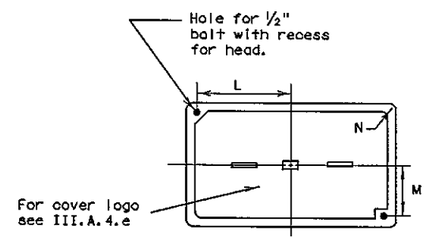

PLAN VIEW

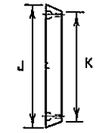

END

SIDE

GROUND BOX COVER

GROUND BOX COVER DIMENSIONS								
BOX	DIMENSIONS (INCHES)							
SIZE	H	I	J	K	L	M	N	P
A, B & E	23 1/4	23	13 3/4	13 1/2	9 7/8	5 1/8	1 3/8	2
C & D	30 1/2	30 1/4	17 1/2	17 1/4	13 1/4	6 3/4	1 3/8	2

5/03 Revision

1 Revised notes.

Texas Department of Transportation
Traffic Operations Division

ELECTRICAL DETAILS-
GROUND BOXES

ED(3)-03

©TxDOT January 1992

REVISIONS	DWN TXDOT	CKD TXDOT	DWN TXDOT	CKD TXDOT
4-98				
12-00				
3-03				
5-03				

DIST	COUNTY	SHEET

71C

CITY OF TEXARKANA, TEXAS
220 Texas Blvd., Texarkana, Texas 75501 903-798-3948

REVISION | DATE

PROJECT: STEP
DATE: Apr 22, 2014
DESIGNED BY: MLD
DRAWN BY: MLD
CHECKED BY: BKO
APPROVED BY: BKO

ELECTRICAL DETAILS

STEP PROJECT
Dept. of Engineering & Infrastructure
City of Texarkana, Texas

DRAWING

FILE:

sion of this standard to other formats or for incorrect results or damages resulting from its use.

ELECTRICAL SERVICES NOTES

All work, materials, services, and incidentals, whether or not specifically shown on the plans, which may be necessary for a complete and proper electrical service installation as specified in the plans to obtain electrical power shall be paid for, performed, furnished and installed by the Contractor. The Contractor shall contact the Utility for metering and shall comply with all Utility requirements.

Primary line extensions, connection charges, meter charges, and other charges by the Utility company to provide power to the location shown, when required, shall be paid for under force account work. The costs associated with these charges shall be approved by the Engineer prior to engaging the Utility company to do the work. The Contractor shall consult with the appropriate Utility to determine costs and requirements, and shall coordinate the Utility's work as approved by the Engineer. The Contractor shall be reimbursed only the amount billed by the Utility. No additional amount for supervision of the Utility's work will be paid.

Materials shall be new and unused, materials and installation shall comply with the applicable provisions of the National Electrical Code (NEC) and National Electrical Manufacturers Association (NEMA) standards and shall be Underwriters Laboratories (UL) Listed. Electrical Service conduits, conductors, disconnects, contactors, circuit breaker panel sizes, and branch circuit breakers, shall be as shown in the Electrical Service Data elsewhere in the plans. Faulty fabrication or poor workmanship in any material, equipment, or installation shall be justification for rejection.

The Contractor shall submit for approval no less than six (6) copies of catalog cut sheets on electrical service materials. Submittals shall be legible and shall be marked to indicate which product on a cut-sheet is to be supplied. Where manufacturers provide warranties and guarantees as a customary trade practice, Contractor shall furnish to the State such warranties or guarantees.

The Contractor shall provide locks keyed with Master #2195 for all lockable electrical enclosures. Keys and locks become property of the State. Unless otherwise approved by the Engineer, enclosures shall not be energized until locks are provided and all bolts are installed.

Circuit directories, where provided, shall be filled out. All breakers and components in shop built panels and enclosures shall be labeled with duo-colored plastic labels. Letters shall be a minimum 3/8 " in height.

Enclosures with external disconnects that de-energize all equipment inside the enclosure, need not have dead front trim, except that incoming line terminations shall be protected from incidental contact.

When galvanized is specified for nuts, screws, bolts or miscellaneous hardware, stainless steel may be used. All wiring and components shall be rated for 75 degrees C. Minimum size for service entrance conductors shall be #6 XHHW.

I. Safety Switch. A safety switch, placed ahead of the meter, shall only be used when specified by the Utility and when shown on the Electrical Service Data. The switch shall be UL Listed, heavy duty type, 600 volt, unfused, with a UL type 3R enclosure and equipped with a solid neutral (s/n) assembly. The switch shall be padlockable in the "on" position.

II. Service Type. Electrical service types A, C, D, and T shall be as schematically detailed on ED(4) or ED(5). Other service types shall be as detailed elsewhere on the plans.

III. Branch Circuit Breakers. Circuit breakers shall be thermal magnetic and have a minimum interrupting capacity of 10,000 amps and a voltage rating compatible with their use. Circuit breakers shall be sized as shown in the electrical service data. Circuit breakers in panelboards and load centers shall be full size and designed exclusively for the panelboard or load center in use. Tandem and half-width breakers shall not be used. All circuit breakers shall be permanently and clearly marked identifying the circuit or device supplied. Circuit breakers shall be UL Listed to UL489.

IV. Circuit Breaker Panelboard. Panelboards shall be UL Listed. Panelboards shall have copper busses, a minimum of 6 one-pole spaces or as required in the electrical service data, and when required will be rated for service equipment. Enclosure shall meet or exceed UL type 3R classification. Panelboards shall have a threaded hub conduit entry for conduit entering the top of the enclosure. Circuit breakers shall be bolt-in type only.

V. Circuit Breaker Load Center. Load centers shall be UL Listed.
Load centers for type T services may have copper or aluminum busses, all other load centers will be copper bus only. Load center will have a minimum of 4 one-pole spaces, and shall be rated for service equipment. Enclosure shall meet UL type 3R classification. Load centers shall have a threaded hub conduit entry for conduit entering the top of the enclosure. Circuit breakers shall be plug-in type only. Load centers for type T services shall accomodate a maximum of 6 one-pole breakers.

VI. Separate or Auxiliary Enclosure. Separate enclosures for HOA, photocell and lighting contactors for types D & T Services shall be a UL Listed assembly with outer door. Interior shall have dead front trim. HOA switch operator shall extend through the dead front trim. Photocell shall be mounted inside the enclosure as described in paragraph XIII when required by descriptive code. Separate enclosures shall meet the construction requirements of paragraph VIII. E, except that separate enclosure shall not have external operating handle, need not have a data pocket and door may latch at only one point. All equipment may be located in one enclosure instead of two, when approved by the Engineer.

VII. Where a Type D or T service is provided, laminated "as built" drawings are required as shown on ED(5) VIII E; shall be delivered before completion of the work, to the Engineer in lieu of placement within these smaller enclosures. Conduit may not enter the back wall of a service enclosure penetrating the equipment mounting panel. Provide grounding bushings on all metal conduits, terminate bonding jumper to grounding bus. Grounding bushing is not required when the end of the metal conduit is fitted with a conduit sealing hub or threaded boss such as a meter base.

EXPLANATION OF ELECTRICAL SERVICE DESCRIPTIVE CODE

ELEC SERV TY X (XXX/XXX) XXX (XX) XX (X) XX (X)

Example: ELEC SERV TY A(240/480)100(NS)SS(E)GC(O)

Schematic Type

Service Voltage (V / V)

Disconnect Amp Rating
(000 indicates main lug only)

SS= Safety switch ahead of meter
NS= No switch ahead of meter and/or no meter required

Enclosure Type
GS= Galvanized steel (see ED(5)VIII,D)
SS= Stainless steel
AL= Aluminum

Photocell Mounting Location
T= Top of pole
E= Inside service/separate enclosure
L= Luminaire mounted
N= None

Service Support Type
GC= Granite concrete
OC= Other concrete
TP= Timber pole
SP= Steel pole
SF= Steel frame
OT= Pole by others or paid for separately
EX= Existing pole
TS= Switch gear to be placed on traffic signal pole
RT= Rectangular structural tubing
PS= Pedestal Service (see ED(5)VIII,G)

O= Overhead service
U= Underground service

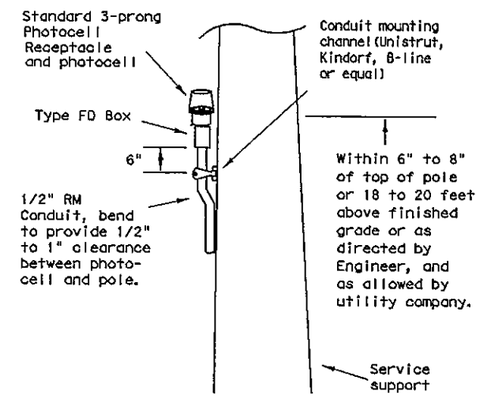

TOP MOUNTED PHOTOCELL

Conduit support spacing 3 feet from enclosure; 5 feet max.

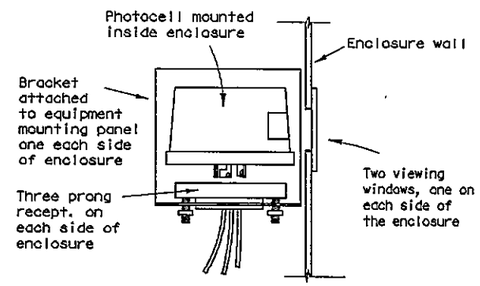

ENCLOSURE MOUNTED PHOTOCELL

For photocell specifications see ED(5),XIII.

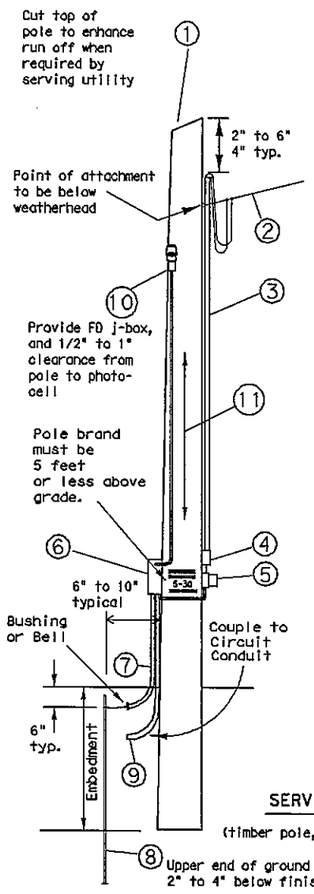

1 - Class 5 pole, height as required
2 - Service drop from utility company (attached below weatherhead)
3 - Service conduit and service entrance conductors(RMC) (See Electrical Service Data)
4 - Safety switch (when required)
5 - Meter (when required)
6 - Service enclosure
7 - No. 6 bare grounding electrode conductor in 1/2 " PVC to ground rod - extend 1/2 " PVC 6" underground.
8 - 5/8 " x 8' Copper clad ground rod - drive ground rod completely underground unless otherwise approved by the Engineer.
9 - RM conduit - same size as branch circuit conduit.
10 - Photocell and conduit - if top mounted. (See Electrical Service Data)
11 - When required by the serving utility provide bare #6 awg copper conductor. Run wire from pole top to butt wrap or copper butt plate. Protect conductor to a height of 8 ft above finish grade.

LIQUIDTIGHT FLEXIBLE METAL CONDUIT (LFMC)

(If applicable)

- Liquidtight flexible metal conduit, may be used when meter and service enclosure are mounted 90 to 180 degrees to each other. Size shall be same as service entrance conduit.
- LFMC shall not exceed 3 ft. and shall be securely supported within one ft. of each end. No strap required for LFMC shorter than 12"
- Each end of LFMC must have a grounding bushing or be terminated with a grounding fitting.
- A neutral conductor must be installed within the LFMC.
- Bend in liquidtight flexible metal conduit shall not exceed 180 degrees.
- A pull test is required on all installed conductors, at least six inches of free conductor movement shall be demonstrated to the satisfaction of the Engineer.

SERVICE SUPPORT TYPE TP (O)

(timber pole, overhead service, typical arrangement)

TIMBER POLE NOTES

1. Conduit and electrical conductors attached to the electrical service pole and underground within 12 inches of service pole shall not be paid for directly but shall be subsidiary to the service pole.
2. Pole top mounted photocell, install on north side of pole or in service enclosure as required. See Electrical Service Data.
3. Attach meter and service equipment with stainless steel or galvanized channel (Unistrut, Kindorf, or equal). Gain pole as required to provide flat surfaces for each strut. Paint ends of galvanized channel with zinc rich paint. Gain depth 5/8" max. Gain height 1 7/8" max. Strut to be 1" max. deep, and 1 5/8" wide max. Secure each strut section to timber pole with two galvanized or SS lag bolts, 1/4" diameter min. by 1 1/2" length min. Place flat cut galvanized or SS washer on each lag bolt. Gain pole in a neat and workmanlike manner.
4. Embedment depth shall be as required in Item 627 Treated Timber Poles.
5. Poles trimmed for excess length shall be trimmed from the top end only.

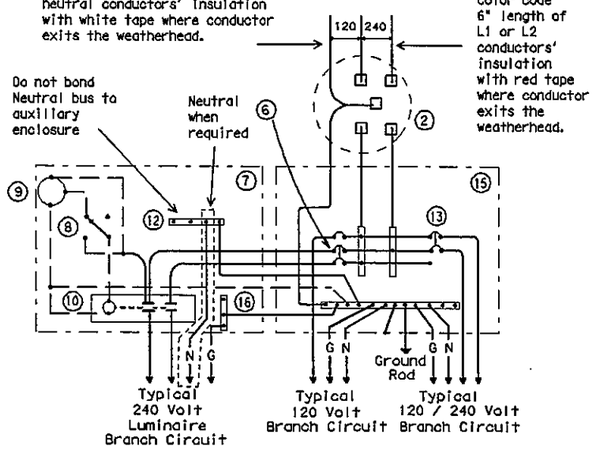

SCHEMATIC TYPE T

120/240 VOLTS - THREE WIRE

Install photocell and lighting contactor when shown on Electrical Service Data.

SCHEMATIC LEGEND

1 - omitted
2 - Meter (when required)
3 - Service Assembly Enclosure
4 - Main Disconnect Breaker (Not Used)
5 - Omit
6 - Circuit Breaker, 15 Amp typical for control circuit wiring
7 - Auxiliary Enclosure
8 - Control Station ("H-O-A" Switch)
9 - Photo Electric Control (enclosure-mounted shown)
10 - Lighting Contactor
11 - Power Distribution Terminal Blocks (Not Used)
12 - Neutral Bus required when 120 v. lights are controlled by lighting contactor
13 - Branch Circuit Breaker (See Electrical Service Data)
14 - Circuit Breaker Panelboard (Not Used)
15 - Load Center
16 - Ground Bus

——— Power Wiring
– – – Control Wiring
—N— Neutral Conductor (when required-to serve 120 v. loads only)
—G— Equipment grounding conductor-always required

Texas Department of Transportation
Traffic Operations Division

ELECTRICAL DETAILS-
SERVICE SCHEMATICS AND
SUPPORT-TYPE TP (OVERHEAD)

ED(4)-03

©TxDOT April 1998	DN: TXDOT	CK: TXDOT	DW: TXDOT	CK: TXDOT
12-00 REVISIONS	CONT	SECT	JOB	HIGHWAY
3-03	DIST		COUNTY	SHEET NO.

71D

FILE:

PROJECT: STEP
DATE: Aug. 22, 2014
DESIGNED BY: M.D
DRAWN BY: M.D
CHECKED BY: BKD
APPROVED BY: BKD

REVISION | DATE

CITY OF TEXARKANA, TEXAS
220 Texas Blvd., Texarkana, Texas 75501 903-798-3948

ELECTRICAL DETAILS

STEP PROJECT
Dept. of Engineering & Infrastructure
City of Texarkana, Texas

DRAWING

Attachment: Exhibit 'B-2' STEP II Sheets 21-47 (1124 : Res No. 2014 - 067 R STEP Project II Downtown Sidewalk Enhancements DPW 14 - 02)

kind is made by TxDOT for any purpose whatsoever. TxDOT assumes no responsibility for the conversion of this standard to other formats or for incorrect results or damages resulting from its use.

SERVICE ENCLOSURE NOTES

VIII. Service Assembly Enclosures. All service assemblies and enclosures shall be UL Listed for the intended purpose.

A. Shop built or shop assembled service assemblies (all types except Type T and Type D without lighting contactor or enclosure mounted photo cell) and all auxiliary equipment enclosures mounted with service equipment and paid for as part of Item 628, "Electrical Services", shall be built or assembled by a UL Listed Industrial Control Panel shop and shall have a unique serial numbered UL Label with the words "LISTED ENCLOSED INDUSTRIAL CONTROL PANEL". The same or an additional label shall have the name, location, and phone number of the shop, the UL file number of the shop, the shop order or drawing number, date of manufacture or assembly, and the line voltage. The service assembly enclosure shall also be labeled "SUITABLE ONLY FOR USE AS SERVICE EQUIPMENT".

B. Conduit entries into the top of enclosures shall have threaded hub. Conduit entries through the equipment mounting back plate will not be allowed.

C. All service enclosure front doors shall be permanently labeled "DANGER HIGH VOLTAGE". Label shall be a self sticking type, intended for outdoor installation. Lettering style, layout and colors of red, black and white shall be as required by OSHA. Label letters shall be 1 to 1 1/2 inches high or as high as the enclosure door width will permit for smaller services. Separate or auxiliary lighting enclosures need not be OSHA labeled when mounted in the same viewing plane as the service enclosure front door. Where only one type of load is served by the service, the service door shall be marked using dua-colored plastic labels or self adhesive vinyl weather resistant labels, minimum of 1 inch high; applied in a neat and workmanlike manner. On the label will be the service number shown on the plans as well as identifying the load served specifically (i.e. lighting, landscaping, signals, traffic management or other wording as directed by the Engineer). Safety switches need not be OSHA labeled unless specifically required by the serving utility.

D. Type GS enclosures will only be allowed for service Types D and T without an enclosure mounted photocell and/or lighting contactor and the Type C panelboard. This spec will allow an "off the shelf" product meeting these specifications to be used. Type GS enclosures shall be made from pre-galvanized steel sheeting, hot dipped galvanized steel, or powder coat painted steel unless shown differently on the plans. Steel enclosures shall be painted inside and outside; galvanized enclosures may be painted. Unless otherwise approved by the Engineer, painted enclosures shall be gray, beige, white or light green. Panelboard/loadcenter enclosures shall meet UL type 3R requirements, shall have a dead front trim, and an outer padlockable door preventing unauthorized persons from operating contained equipment. Galvanized steel is no longer allowed for Types A, C, or custom-built D or T enclosures. If GS is shown in the descriptive code for any of these, an AL shall be provided.

E. Type AL enclosures for service Types A and C shall meet UL type 3R requirements and shall also meet additional requirements of this paragraph. The enclosure shall have both a main disconnect remote operator handle and a door latch handle. Die-cast handles are not acceptable. The main disconnect remote operator shall be flange-mounted, shall interlock the door when in the "on" position, and shall be padlockable in both the "on" or "off" positions. Door latch shall latch at two or more points, operate by a handle separate from disconnect switch and be capable of being locked. Door closure clamps will not be allowed. Lock must be keyed to Master #2195. All the enclosures shall have either a continuous stainless steel piano hinge with stainless steel pin or enclosures less than 30 inches may have two heavy duty hinges, those over 30 inches must have three. Heavy duty two and three point hinges shall have a 0.185 inch minimum diameter electro-zinc plated steel pin or a stainless steel pin. Two point hinged doors shall be rated for 56 lbs of loading. Three point hinged doors shall be rated for 70 lbs of loading. The door shall have an attached data pocket constructed of either thermoplastic or metal. Pocket shall be 12" x 12", unless that size will not fit in enclosure. The pocket shall then be as large as possible, as approved by the Engineer, and mechanically attached with stainless steel nuts and bolts, or stainless steel or aluminum rivets. Enclosure shall include an equipment mounting panel installed inside the enclosure on collar studs or tapped bosses, and constructed of a minimum 12 guage galvanized steel. Equipment mounting panels shall not be painted. Enclosure shall have factory installed external mounting feet. Enclosure door shall be capable of opening at least 130 degrees, with arm or other approved means to hold the door open. Only the enclosure exterior will be primed and painted. Paint color shall be beige or gray and shall be powder coat paint as shown below. Condensation drainage shall be provided in the bottom of the enclosure before leaving the factory. The Contractor shall prepare and submit a schematic drawing unique to an individual service. The approved drawing shall be laminated and placed in the document packet of the service at the time of shipment to the job site. All applicable wiring diagrams and plan sheet layouts for all equipment and branch breaker circuits supplied by that service shall also be laminated and placed in the document packet prior to shipping. Type AL enclosures for Type D and T services with enclosure mounted photocell and/or lighting contactor shall have the loadcenter interior mounted in an enclosure with properly adapted dead front trim. Types D and T shall not have a loadcenter exterior "can" mounted inside another enclosure meeting these specifications. (Do not put one enclosure inside another enclosure). Types D and T with enclosure mounted photocell and/or lighting contactor shall meet the additional requirements of this paragraph except that remote-operating handle will not be provided.

F. Type SS enclosures for Type A and C shall meet all the requirements above for their respective type AL. Type SS enclosures for D and T shall meet all the requirements above for their respective type AL. Stainless Steel shall not be painted.

G. PS enclosure shall be as detailed and specified on ED(3). Galvanized steel will not be allowed for any pedestal service. If GS is shown in the descriptive code an AL will be provided.

IX. Powder Coat Paint. Powder coating shall be either a polyester thermosetting resin, a zinc rich primer with a TGIC (triglycidyl isocyanurate) powder overcoating, or a zinc-rich epoxy powder, applied by either electrostatic spray or fluidized bed immersion, high temperature oven cured, high density, low gloss, 4 mil thick (minimum), coating. Adhesion shall meet the 5A or 5B classifications of ASTM D3359. Finish shall be uniform in appearance and free of scratches.

X. Main Disconnect. Main disconnect device shall be a circuit breaker, as specified in the Electrical Service Data, shall be two or three pole, and rated for the voltage and amperage specified. Circuit breaker shall be an UL Listed thermal-magnetic circuit breaker controlled by flange-mounted remote operator in the service assembly enclosure when required. Circuit breakers shall have a minimum interrupting rating of 10,000 Amps. When the utility company provides a transformer larger than 50 KVA, Contractor shall verify that the available fault current is less than the circuit breaker amps interrupting capacity (AIC) rating and shall provide documentation from the Utility to the Engineer. Documentation shall be submitted at the same time as other electrical submittals. Circuit breaker shall be UL Listed to UL489. No backfed breakers will be allowed for use as a main disconnect.

XI. Control Circuit. Control circuit protection shall be 15 amp circuit breaker.

XII. Control Station ("H-O-A" Switch). Control station shall be a maintained-contact, three position selector switch in an UL type enclosure. Switch shall be rated 600 volts and shall be fitted with "Hand-Off-Auto" legend.

XIII. Photo Electric Control. Photo electric control shall consist of a photocell, internal lightning arrester, and relay or bimetallic switch mounted inside a weatherproof enclosure with standard 3-prong twist lock photocell plug and receptacle. The enclosure shall be made of poly-acrylic with clear acrylic window. Enclosure chassis shall be molded thermosetting plastic. The photocell shall have a polyethylene gasket, and shall have a hermetically sealed cadmium sulfide cell. The arrester shall have an enclosed type expulsion arrester rated 2.0 kV sparkover with 5,000 amps follow-through. Relay or switch shall be time delay type with normally closed contacts. Photo electric control shall be rated a minimum of 1800 VA, voltage as required. Enclosure mounted photocells shall be the same as above except that the photocell shall be mounted inside the enclosure. The enclosure shall have two acrylic paned windows, or other material approved by the Engineer, one on each side of the enclosure. Each window shall be rectangular approximately one inch by two inches, round 2 inch diameter, or as otherwise approved by the Engineer. Bracket and photocell's receptacle will be mounted inside enclosure next to each window. Except for window side, 2" of clearance is required on all sides of photocell for ease of replacement. The photocell's receptacle is held in place by two mounting screws on bracket and located next to each window of the enclosure. The 3-prong twist lock photocell shall be mounted in a position to receive light from the window closest to the photocell. The photocell shall be mounted in a position to receive light from one window. Top of pole mounted photocells shall be mounted as shown on ED(4). The Contractor shall be responsible for proper operation of the photo-electric control. The Contractor shall move and/or adjust or shield the photocell from stray or ambient nighttime light or shall make any other adjustments required for proper operation. The photocell shall face North when practicable. Unless otherwise shown on the plans, the photocell shall turn on the illumination system at 1.0 +(-) 0.5 footcandle and turn off the illumination system at two footcandles higher than turn on.

XIV. Lighting Contactor. Lighting contactor shall be a UL Listed NEMA rated lighting contactor, two-pole or multipole as required, electrically held type designed to control high pressure sodium lighting loads, with silver alloy double break contacts rated at 240 volts, 480 volts or 600 volts as required. Lighting contactor shall not be the DIN rail mounted type.

XV. Power Distribution Terminal Blocks. Power distribution terminal blocks shall be rated for 600 volts and shall be used for line side connections to branch circuit breakers where more than one circuit breaker is required. Lugs on blocks shall be properly sized for conductors being used. Only one conductor shall be placed under each lug.

XVI. Neutral/Ground Bus. Neutral/ground bus shall be a factory made bus permanently bonded to the enclosure with properly sized lugs for grounding and neutral conductors.

SCHEMATIC LEGEND

1 - Safety Switch (when required)
2 - Meter (when required)
3 - Service Assembly Enclosure
4 - Main Disconnect Breaker (See Electrical Service Data)
5 - Omit
6 - Circuit Breaker, 15Amp
7 - Auxiliary Enclosure
8 - Control Station ("H-O-A" Switch)
9 - Photo Electric Control (enclosure-mounted shown)
10 - Lighting Contactor
11 - Power Distribution Terminal Blocks
12 - Neutral/Ground Bus
13 - Branch Circuit Breaker (See Electrical Service Data)
14 - Circuit Breaker Panelboard (See Electrical Service Data) (If Type C is shown as AL or SS on descriptive code, this is the service assembly enclosure only. Panelboard enclosure is GS unless otherwise noted.
15 - Load Center

——— Power Wiring
– – – – Control Wiring
—N— Neutral Conductor (when required) serve 120 v. loads only)
—G— Equipment grounding conductor-always required

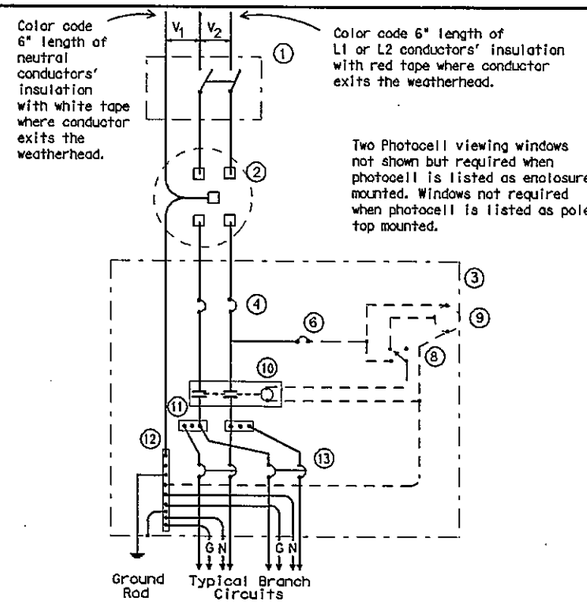

SCHEMATIC TYPE A

THREE WIRE

Maximum feeder circuit size (High Mast Poles): 100 amps for two pole 480V, 125 amps for one or two pole 120V or 240V. Maximum branch circuit size: 50 amps.

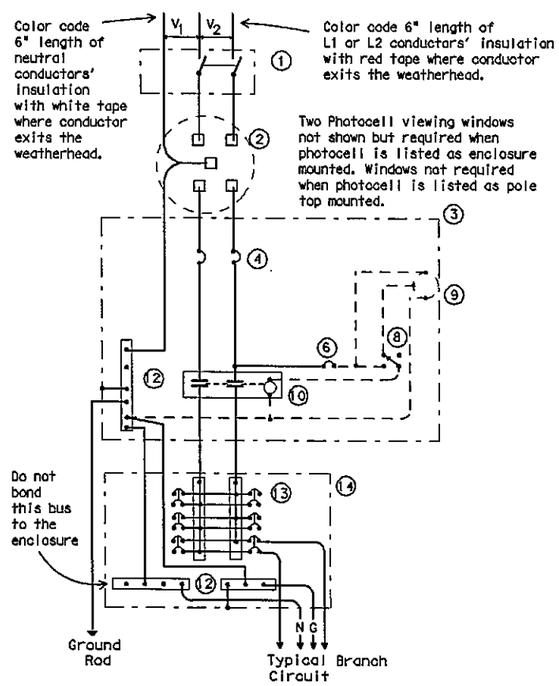

SCHEMATIC TYPE C

THREE WIRE

Maximum feeder circuit size (High Mast Poles): 100 amps for two pole 480V, 125 amps for one or two pole 120V or 240V. Maximum branch circuit size: 50 amps.

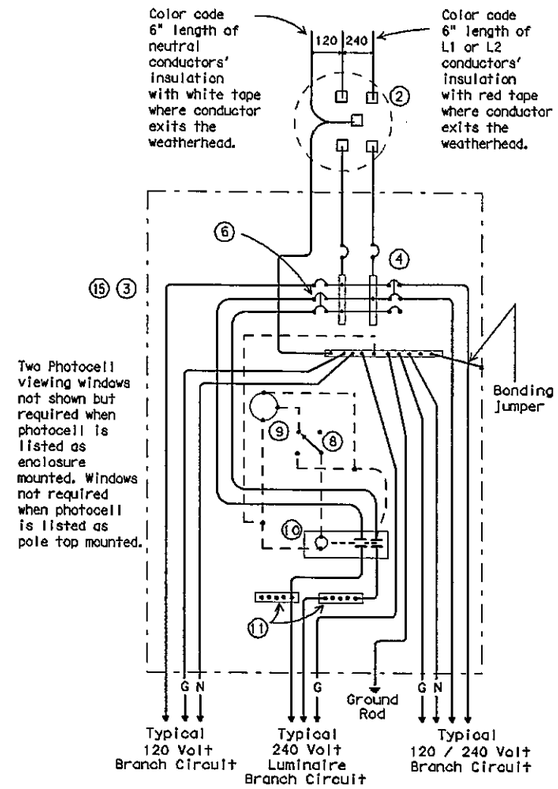

SCHEMATIC TYPE D

120/240 VOLTS - THREE WIRE

Install photocell and lighting contactor when shown on Electrical Service Data. See Type D service notes.

TYPE D SERVICE NOTES

Photocell and lighting contactor shall be located either in the same UL type 3R enclosure with load center or, if approved by Engineer, in separate enclosure. There shall be a window on each side of enclosure to allow operation of photocell. Both photocell contactor and breaker area shall have dead front trim. Enclosure, except for RT and PS supports, shall not exceed 36 inches in height or 16 inches in width unless approved by the Engineer. Ty D load center with lighting controls or TY D separate lighting control enclosure shall have power distribution blocks for a minimum of 4, #8 conductors per phase.

Texas Department of Transportation
Traffic Operations Division

ELECTRICAL DETAILS-
SERVICE ENCLOSURE
& NOTES

ED(5)-03

©TxDOT April 1998

DN: TXDOT	CK: TXDOT	DW: TXDOT	CK: TXDOT
CONT	SECT	JOB	HIGHWAY
DIST	COUNTY		SHEET NO.

12-00 REVISIONS
3-03

71E

FILE:

9.d

REVISION	DATE

CITY OF TEXARKANA, TEXAS
220 Texas Blvd., Texarkana, Texas 75501 903-798-3948

PROJECT: STEP
DATE: Apr 22, 2014
DESIGNED BY: MLD
DRAWN BY: MLD
CHECKED BY: BKD
APPROVED BY: BKD

ELECTRICAL DETAILS

STEP PROJECT
Dept. of Engineering & Infrastructure
City of Texarkana, Texas

DRAWING

Attachment: Exhibit 'B-2' STEP II Sheets 21-47 (1124 : Res No. 2014 - 067 R STEP Project II Downtown Sidewalk Enhancements DPW 14 - 02)

DISCLAIMER: The use of this standard is governed by the "Texas Engineering Practice Act". No warranty of any kind is made by TxDOT for any purpose whatsoever. TxDOT assumes no responsibility for the conversion of this standard to other formats or for incorrect results or damages resulting from its use.

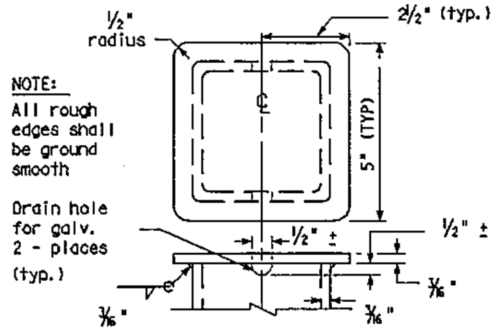

TOP OF POLE
TYPE SF & SP

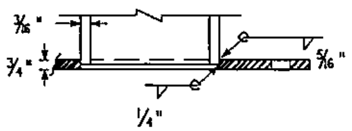

BOTTOM OF POLE
TYPE SF & SP

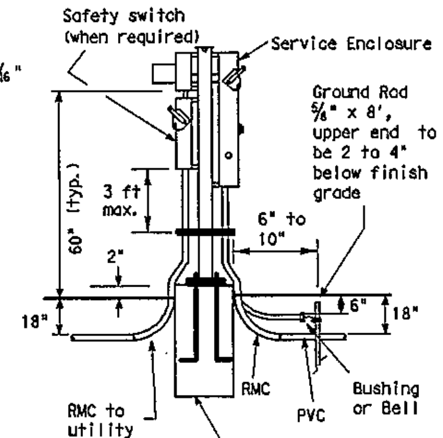

SERVICE SUPPORT
TYPE SP (U)
UNDERGROUND SERVICE
WITH SAFETY SWITCH

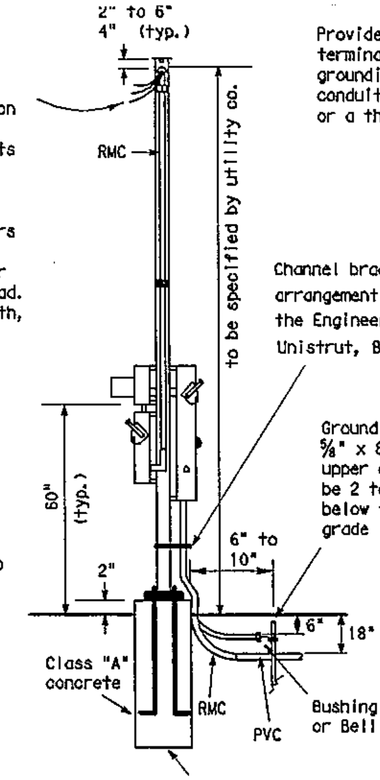

SERVICE SUPPORT
TYPE SP (O)
OVERHEAD SERVICE
WITH SAFETY SWITCH

Provide grounding bushings on all metal conduits, terminate bonding jumpers(min. #6 AWG. Copper) to grounding bus. Grounding bushing not required when conduit end is fitted with a conduit sealing hub or a threaded type of boss such as a meter hub.

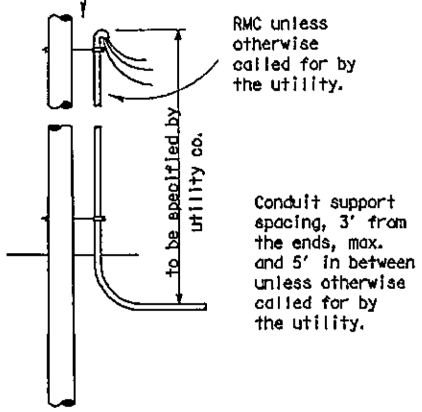

UNDERGROUND RISER
AT UTILITY POLE
(for underground service)

NOTES:

1. Support Type SP and SF: Fabricated from 4" x 4" x 3/16 " square structural tubing, ASTM A500 Grade A or G or equal. Base plate shall be 3/4 " plate, ASTM A36 or equal. All equipment and conduit shall be mounted on galvanized channel strut, 1 1/2 " x 1 5/8 " x 12 guage galvanized steel channel (Unistrut, Kindorf, B-line or equal) clamped with channel hardware, bolted or welded to vertical member as approved by the Engineer.
2. Paint field cut ends of all channels with zinc-rich paint.
3. All Steel Poles (SP and SF) shall be hot-dip galvanized after fabrication. Poles for overhead service shall be fitted with eyebolt or similar fitting, as approved by the utility company, for attachment of sevice drop to the pole.
4. All conduit and conductors attached to the electrical service and within 12 inches of the electrical service will not be paid for directly, but shall be subsidiary to the electrical service. All conduit and conductors from the utility company pole to the point 12 inches from the electrical service, including conduit and conductors required for the utility pole riser when furnished by the Contractor, will be paid for separately.
5. All mounting hardware and installation details of services shall be in accordance with utility company specifications.
6. Anchor bolts for underground service supports shall be 3/4" x 18" x 4" (dia. x length x hook length). Anchor bolts for overhead services shall be 3/4" x 56" x 4". Anchor bolts shall be provided with leveling nuts.
7. Conduit for grounding electrode conductor (ground rod wire) shall be 1/2" PVC. All other conduit on electrical services shall be rigid metal conduit. Service entrance conduit size shall be as shown elsewhere. Conduit for branch circuit entry to enclosure shall be the same size as that shown on the layout sheets for branch circuit conduit. Rigid metal conduit shall extend to the rigid metal elbow and then be coupled to the type conduit shown on the layout for that particular branch circuit. RMC shall have grounding bushings in enclosures.
8. If pole is painted, each separate painted piece shall have a bonding jumper attached to a tapped hole.
9. Sheet metal screws are not allowed for bonding. Provide 1/4-20 machine screws. Remove all non-conductive material at contact points. Terminate bonding jumper using listed device. Bonding jumper min. #6 AWG Copper. Make up all threaded bonding connections wrench tight.
10. Conduits entering enclosure from underground shall be sealed at both ends. Silicone sealant will not be allowed.
11. ⚠ Ground rod clamp to be UL listed for direct burial.
12. Service entrance conductors shall exit separately bushed non-metallic openings in weatherhead.
13. Free conductor at weatherhead to be 12 in. min., 18 in. max., or as required by utility. Color code grounded-neutral conductor with white tape covering 6 in. of conductor. Color code L1 or L2 Hot un-grounded conductor with red tape covering 6 in. of conductor. Service drop and service entrance conductors must not contact metal pole in such a manner as to result in abrasion of insulated conductors.
14. Conduit support spacing to be max. 3 ft. from ends, and max. 5 ft. in between.
15. Shop drawings are not required for service support structure unless specifically stated elsewhere or as directed by the Engineer.
16. Service enclosure to be labeled as specified on ED(5) VIII C.
17. Liquidtight flexible metal conduit (LFMC) may be used between the meter and service enclosure when they are mounted 90 to 180 degrees to each other. LFMC shall be the same size as service entrance conduit. LFMC shall not exceed 3 ft. and shall be securely supported within one foot of each end. LFMC shorter then 12" need not be strapped. Each end of LFMC must have a grounding bushing or be terminated with a grounding fitting. A neutral conductor must be installed within the LFMC. Bend in LFMC shall not exceed 180 degrees.
A pull test is required on all installed conductors, at least six inches of free conductor movement shall be demonstrated to the satisfaction of the Engineer.

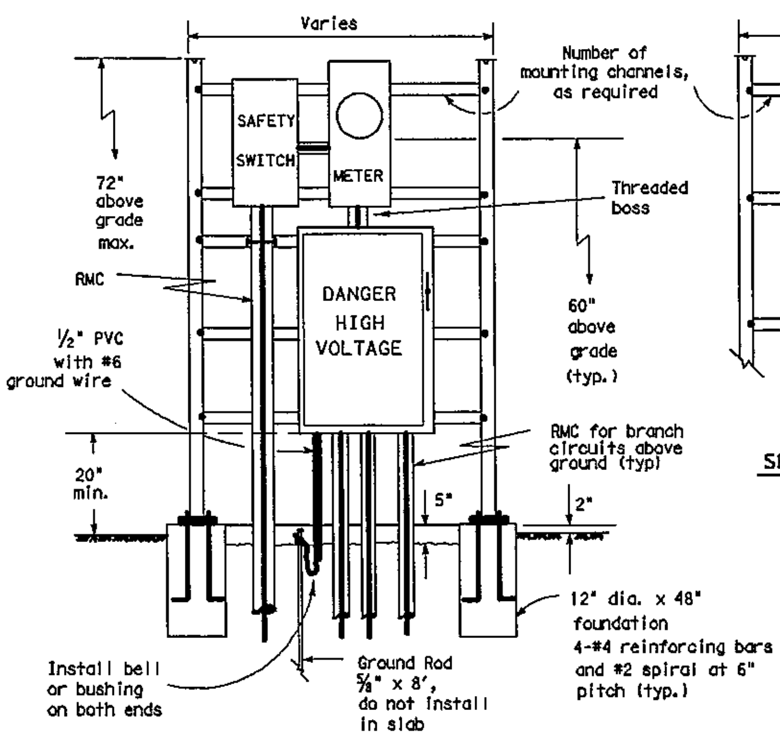

SERVICE SUPPORT TYPE SF (U)
UNDERGROUND SERVICE
WITH SAFETY SWITCH
(Typical Arrangement)

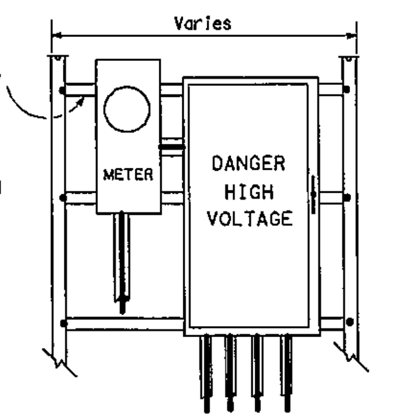

SERVICE SUPPORT TYPE SF (U)
UNDERGROUND SERVICE
WITHOUT SAFETY SWITCH

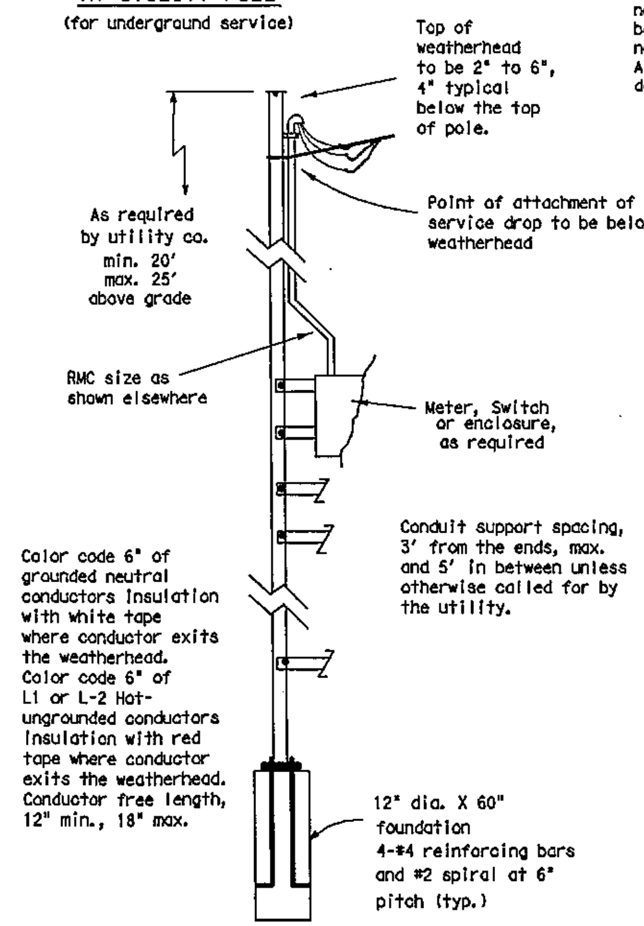

SERVICE SUPPORT TYPE SF (O)
OVERHEAD SERVICE

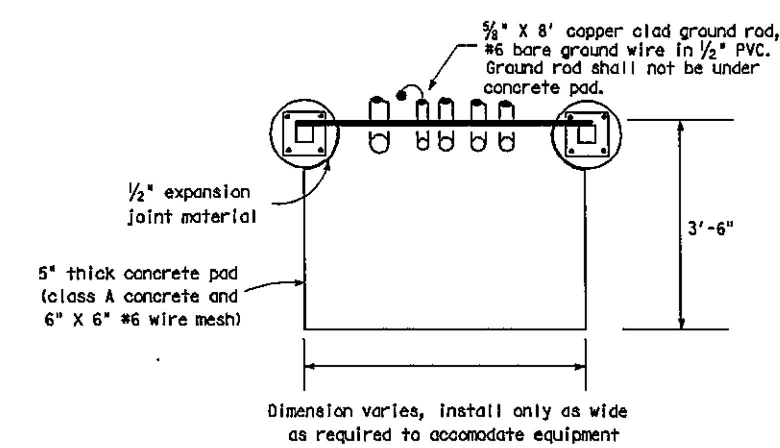

SERVICE SUPPORT TY SF (O) & SF (U)
TOP VIEW

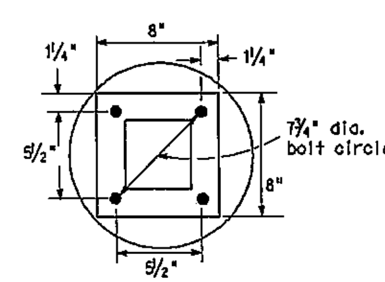

BASE PLATE DETAIL
TYPE SF & SP

5/03 Revision
⚠ Revised notes.

Texas Department of Transportation
Traffic Operations Division

ELECTRICAL DETAILS-
SERVICE SUPPORT
TYPES SF & SP

ED(6)-03

©TxDOT January 1992	DN: TXDOT	CK: TXDOT	DW: TXDOT	CK: TXDOT
REVISIONS	CONT	SECT	JOB	HIGHWAY
4-98 12-00 3-03 5-03	DIST	COUNTY		SHEET

REVISION | DATE

CITY OF TEXARKANA, TEXAS
220 Texas Blvd., Texarkana, Texas 75501 903-798-3948

PROJECT: STEP
DATE: Apr 22, 2014
DESIGNED BY: MLD
DRAWN BY: MLD
CHECKED BY: BKD
APPROVED BY: BKD

ELECTRICAL DETAILS

STEP PROJECT
Dept. of Engineering & Infrastructure
City of Texarkana, Texas

DRAWING

Attachment: Exhibit 'B-2' STEP II Sheets 21-47 (1124 : Res No. 2014 - 067 R STEP Project II Downtown Sidewalk Enhancements DPW 14 - 02)

kind is made by TxDOT for any purpose whatsoever. TxDOT assumes no responsibility for the conversion of this standard to other formats or for incorrect results or damages resulting from its use.

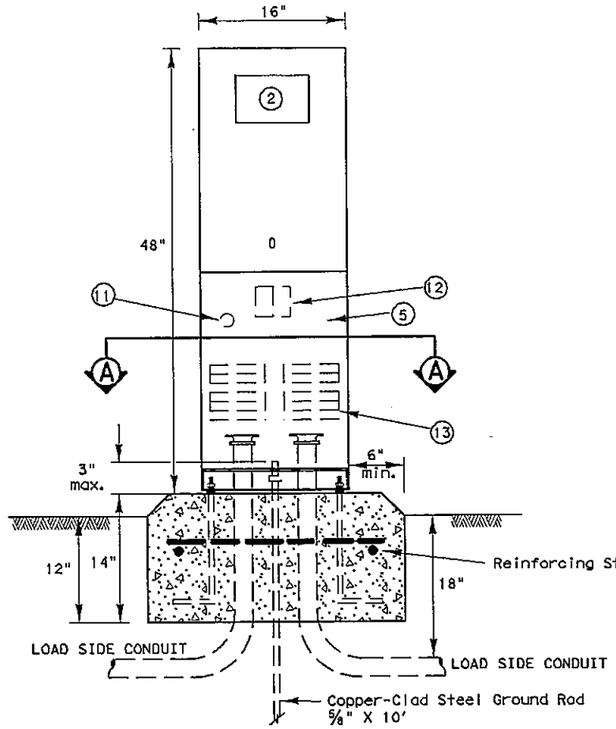

Note: Ells in foundation are rigid metal, size called for on the plans. Extension conduits from these ells may be PVC, provided ends of rigid metal conduits are more than 2 in. below top of concrete foundation. Where extension conduits are metal, grounding bushing must be installed and a bonding jumper properly terminated.

FRONT VIEW

Ty C shown, Ty A similar except that Ty A shall have individual circuit breakers mounted on a equipment mounting panel. CB Handles shall protrude through hinged deadfront trim.

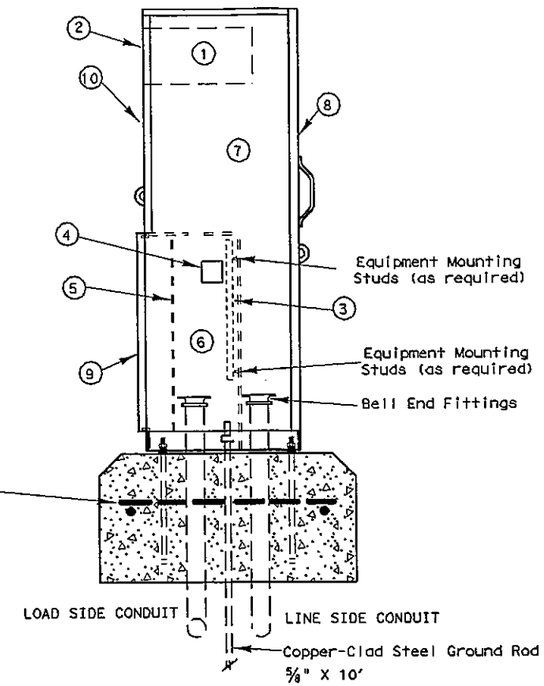

SIDE VIEW

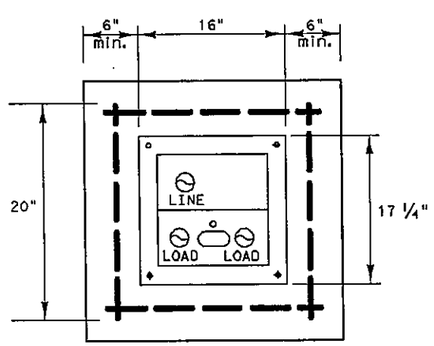

SECTION A-A

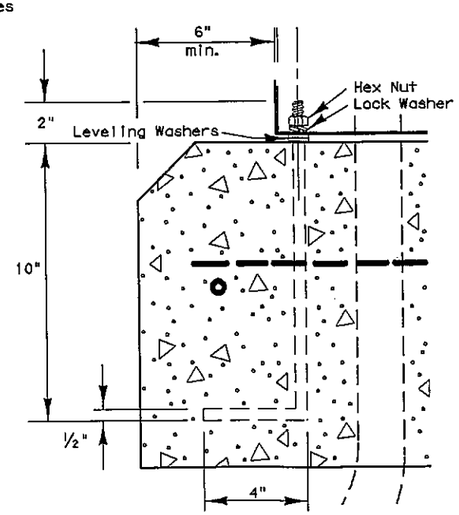

ANCHOR BOLT DETAIL

GENERAL NOTES

1. The pedestal service shall be UL type 3R, and shall be constructed of a minimum of 12 guage stainless steel or aluminum as required by descriptive code. Stainless steel shall not be painted. For aluminum, the finish shall be an electrostatic applied polyurethane baked on powder, light green in color, or color as shown elsewhere and as approved by the Engineer. The front of the interior dead front trim shall be permanently labeled, "Danger High Voltage" with OSHA style label. The exterior of the pedestal service door shall be permanently labeled with a placard as to its use (i.e. Roadway Lighting, Traffic Signals, etc.). Placard shall be neat and professional in appearance. Lettering shall be 1" minimum height.
2. Utility Access Door shall have stainless steel piano hinge and provisions for padlocking.
3. Pedestal door shall have stainless steel piano hinge and stainless steel latch with provisions for padlocking.
4. Meter Access shall be hinged and capable of padlocking.
5. All mounting hardware and installation details of services shall be in accordance with utility company specifications. The Contractor is responsible for contacting the local utility company and obtaining their approval of pedestal details prior to making submittal to the Department and prior to constructing the electrical pedestal service. Any changes required by the utility company shall be noted on the submittals.
6. Meter Socket shall be a minimum of 100 amp rating and shall comply with the local utility requirements.
7. Photoelectric Control shall meet the requirements as shown on ED(5). Shield to control stray light is allowable. The Contractor shall be responsible for proper operation of the photo-electric control. The Contractor shall move and/or adjust or shield the photocell from stray or ambient nighttime light or shall make any other adjustments required for proper operation. The photocell shall face North when practicable. Unless otherwise shown on the plans, the photocell shall turn on the illumination system at 1.0 +(-) 0.5 foot-candle and turn off the illumination system at two footcandles higher than turn on.
8. The Control Station (H-O-A Switch) shall be as shown on ED(5) except that H-O-A Switch operating handle shall protrude through hinged deadfront trim and NEMA 1 enclosure will not be required.
9. Concrete for pedestal service foundation shall be class A or C and shall be in accordance with Item 420, "CONCRETE STRUCTURES", except that concrete will not be paid for directly but shall be considered subsidiary to Item 628, "ELECTRICAL SERVICES".
10. Reinforcing steel shall be #4 rebar in accordance with Item 440, "REINFORCING STEEL".
11. Anchor bolts shall be A36M55 in accordance with Item 449, "ANCHOR BOLTS". Anchor bolts shall be 1/2 inch x 12 inches x 4 inches (dia. x length x hook length).
12. All conduit and conductors attached to the pedestal service and within 12 inches of the pedestal service will not be paid for directly, but shall be subsidiary to the pedestal service. All service conduit and conductors from the utility company transformer to a point 12 inches from the pedestal service shall be paid for separately. Service conduit shall be the size and type as shown in the Electrical Service Data.
13. Dimensions may vary to accomodate required equipment, utility company requirements, or manufacturer's standard equipment dimensions. The Contractor shall submit to the Engineer for approval, six (6) copies of brochures and/or drawings of the pedestal service to be supplied, including actual dimensions, and a paint color sample.
14. A separate enclosure as shown on ED(4) or ED(5) for photocell shall not be used for pedestal services. Photocell shall be installed as shown here.
15. The pedestal door shall have a mechanically attached data pocket on the inside. Pocket shall be either metal or thermoplastic and shall measure at least 12 inches by 12 inches. The Contractor shall prepare and submit a schematic drawing unique to an individual service. The approved drawing shall be laminated and placed in the document pocket of the service at the time of shipment to the job site. All applicable wiring diagrams and plan sheet layouts for all equipment and branch breaker circuits supplied by that service shall also be laminated and placed in the document pocket prior to shipping.
16. ⚠ Ground rod clamp to be UL listed for direct burial. All non-conductive coating to be removed from ground rod at clamp location. Ground rod wire to be #6 AWG solid copper. Metal conduit ells to have grounding bushing and bonding jumpers correctly installed.
17. All conduits entering enclosures from underground must be sealed. Silicone shall not be allowed.
18. All conductors shall be megged and pull tested. Traffic signal cable not to be megged after connection, as electronics will be damaged.
19. Top of concrete foundation to be finished in a neat and workman like manner. If leveling washers are used, no more than 1/4 in. height shall be used at any one corner. Maximum dip or rise in foundation is not to exceed 1/8 in per foot. When properly installed, top of service enclosure shall read level front to back and side to side within 1/4 in. Rocking or movement of the service enclosure shall be repaired by the contractor at no cost to the state.
20. Liquidtight flexible metal conduit shall not be allowed on PS type services.

LEGEND

1. METER SOCKET, (when required)
2. METER SOCKET WINDOW, (when required)
3. EQUIPMENT MOUNTING PANEL
4. PHOTO ELECTRIC CONTROL WINDOW, (when required)
5. HINGED DEADFRONT TRIM
6. LOAD SIDE CONDUIT AREA
7. LINE SIDE CONDUIT AREA
8. UTILITY ACCESS DOOR, with handle
9. PEDESTAL DOOR
10. HINGED METER ACCESS
11. CONTROL STATION (H-O-A Switch)
12. MAIN DISCONNECT
13. BRANCH CIRCUIT BREAKERS

5/03 Revision

⚠ Revised notes.

Texas Department of Transportation
Traffic Operations Division

ELECTRICAL DETAILS
ELECTRICAL SERVICE SUPPORT
PEDESTAL SERVICE TYPE PS

ED(8)-03

©TxDOT April 1998

REVISIONS	CK: TXDOT	DW: TXDOT	CK: TXDOT	DW: TXDOT	CK: TXDOT
12-00					
3-03					
5-03					

DIST	COUNTY	SHEET

REVISION	DATE

CITY OF TEXARKANA, TEXAS
220 Texas Blvd., Texarkana, Texas 75501 903-798-3948

PROJECT: STEP
DATE: APR 22, 2014
DESIGNED BY: MJD
DRAWN BY: MJD
CHECKED BY: DKO
CHECKED BY:
APPROVED BY: DKO

ELECTRICAL DETAILS

STEP PROJECT
Dept. of Engineering & Infrastructure
City of Texarkana, Texas

DRAWING

DISCLAIMER: The use of this standard ... kind is made by TxDOT for any purpose whatsoever. TxDOT assumes no responsibility for the conversion of this standard to other formats or for incorrect results or damages resulting from its use.

Color code grounded - neutral conductor with white tape covering 6 in. of conductor length. Color code L1 or L2 Hot conductor with red tape covering 6 in. of conductor length. Where conductors exit weatherhead, conductors free length shall be 12 in. min., 18 in. max.

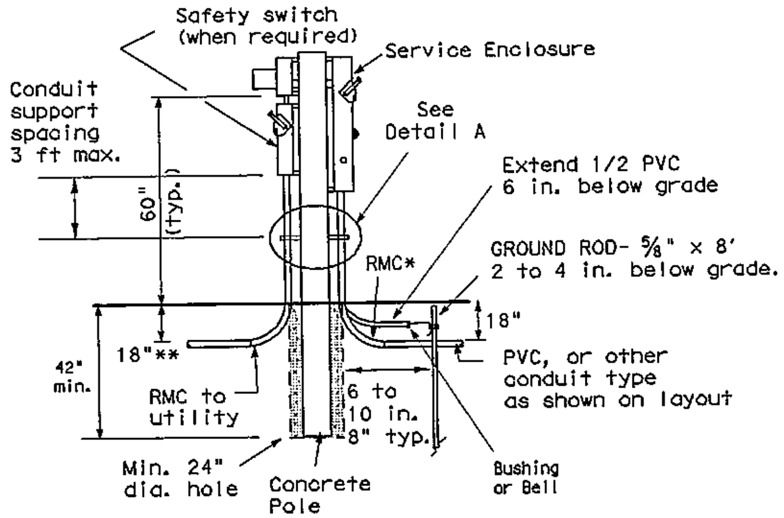

CONCRETE SERVICE SUPPORT

(Underground)

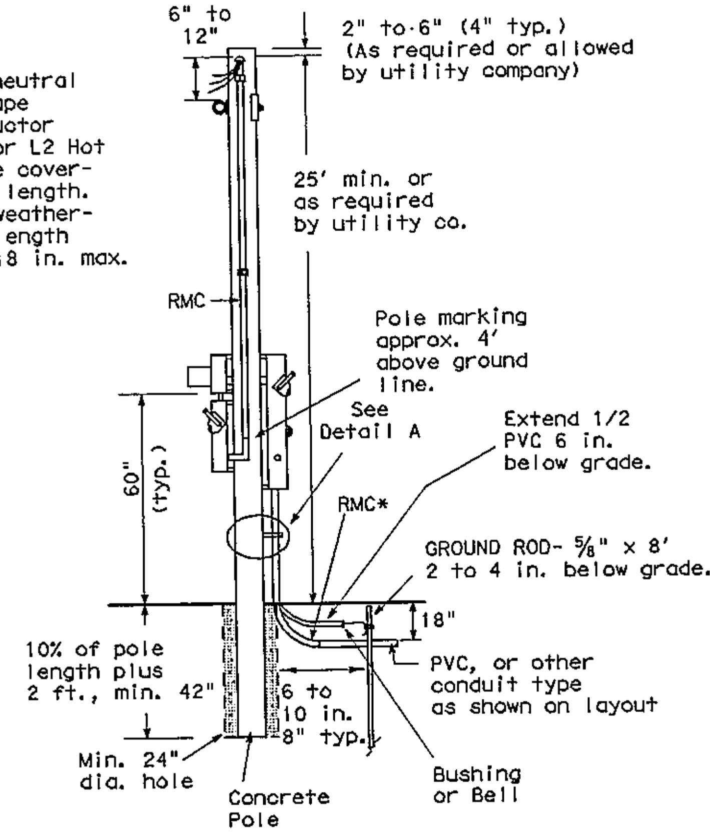

CONCRETE SERVICE SUPPORT

(Overhead)

*same size as branch circuit conduit shown on layout sheets.
** or as required by utility company.

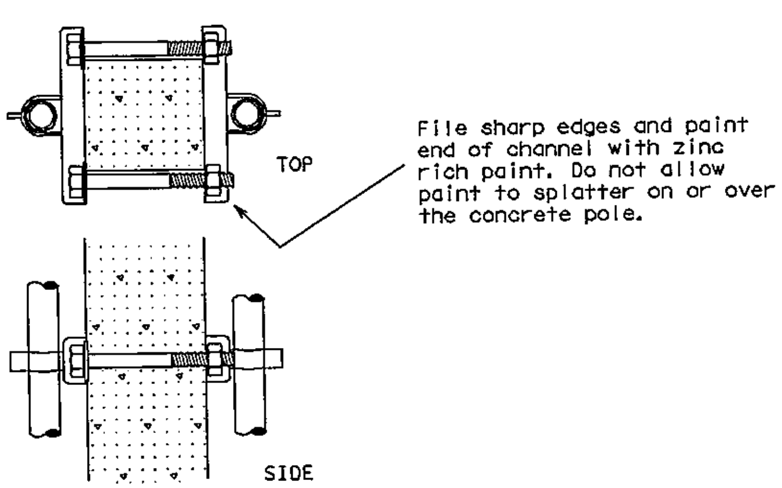

DETAIL A

Channel bracket or other arrangement approved by the Engineer. (Kindorf, Unistrut, B-line or equal)

Note: Attach channels with stainless steel concrete anchors (max. 1" depth), square U-bolts or back to back channel with long bolts, or other secure mounting as approved by the Engineer. Bolts galvanized in accordance with ASTM A153. Channel shall be galvanized.

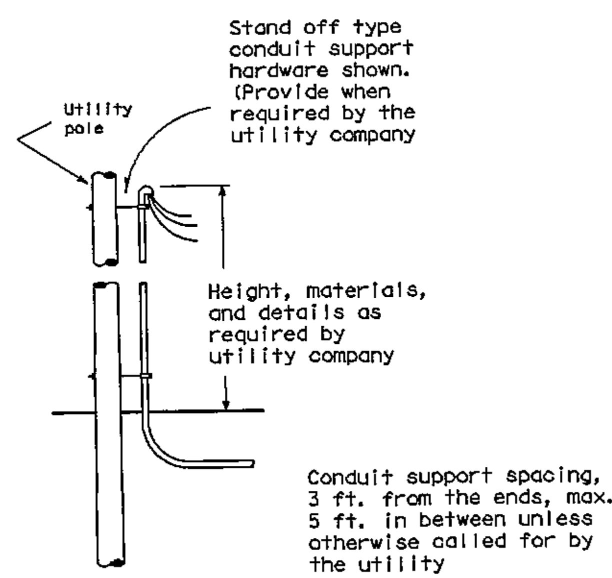

UTILITY POLE CONNECTIONS

(When underground service is required by descriptive code and utility is overhead.)

NOTES:

Electrical service support structures bid as type GC or OC shall be concrete poles and shall meet the following specifications.

1. Poles shall be prestressed concrete and suitable for direct embedment into the ground without special foundations.
2. Poles bid as type "GC" shall be a granite concrete mixture consisting of gray Portland cement with exposed pink granite aggregate. Poles bid as type "OC" shall be other concrete mixture as shown elsewhere on the plans or as directed by the Engineer.
3. Poles greater than 10 ' shall be square in cross-section, with chamfered corners, and shall have a standard taper of 0.162 inch per foot. Cross sectional dimensions shall not deviate by more than 3/8 inch. Poles 10' or less may be tapered .162"/ft or may be non-tapered. The allowable tolerance shall be plus 3 inches and -2 inches in the overall length. The width of the bottom face of the pole as it is cast may be less than the top face. All small cavities shall be cleaned, saturated with water and then filled with mortar. A small cavity is defined as one larger than 1/4 inch but smaller than 3/4 inch in diameter, and less than 3/8 inch deep. Larger non-structural cavities and spalls shall be repaired by opening side of the damaged area on a 1 to 1 slope using a mechanical grinder, cleaning thoroughly and filling with a high-strength non-shrink concrete repair material. Poles with other defects may be repaired only upon authorization of and using the method prescribed by the Engineer.
4. The end of each steel reinforcing strand in the tip and butt shall be burned back to a minimum depth of 1/2 inch. The holes left by the removal of the strand shall be thoroughly cleaned of any loose residue. The holes shall then be completely filled with non-shrink grout and smoothed evenly with tip or butt surface.
5. Prestressing strands shall have a minimum concrete cover of 1 1/4 inch.
6. A straight line joining the edge of the pole at the butt and the edge of the pole at the top shall not be distant from the surface of the pole at any point by more than 3/8 inch for each 10 feet of length.
7. The chloride content of the concrete mix, including all ingredients shall be 0.4 pounds per cubic yard, or less.
8. Concrete used in poles shall have a compressive strength at transfer of not less than 4,000 PSI, and a 28-day compressive strength of not less than 7,000 PSI.
9. Materials shall comply with the latest version of the following standards:
   a) Portland Cement - ASTM C105
   b) Admixtures - ASTM C494
   c) Aggregates - ASTM C33 or C330
   d) Reinforcing Bars - ASTM A615
   e) Cold-Drawn Spiral Wire - ASTM A82
   f) Prestressing Strand, 270K - ASTM A416
10. Poles greater than 10' shall have a 4 inch tip and 3/8 inch strands. Poles 10' or less shall have a 5 inch min. tip and 3/8 inch strands. Pole shall have a load capacity of greater than 1188 lbs. applied 2 ft. below tip.
11. Poles shall be capable of withstanding single point pick up from the horizontal position when lifting from a point 30% of the overall length down from the tip.
12. All poles shall be marked by imprinting on one face. Marking shall indicate manufacturer's name, year of manufacture, length and name or type of pole. Marking shall be located approximately 4 ft. above ground line.
13. Dunnage points, two-point pickup locations for handling pole in horizontal position, and one-point pickup locations for use in raising the pole to a vertical position and handling in setting operation shall be marked on the pole with durable ink or paint or cast into the pole. These marks shall be small but conspicuous.
14. Poles shall be embedded 42 inches or 10% of length plus 2 ft. into the ground whichever is greater.
15. When required by utility company for overhead services, poles longer than 10 feet shall have a #6 solid ground wire running the entire length exiting within 6 inches from the top and bottom of the pole. The Contractor shall connect the bottom to a butt wrap or butt plate grounding device.
16. All conduit and conductors attached to the service support and within 12 inches of the service support will not be paid for directly, but shall be subsidiary to the electrical service. All conduit and conductors from the utility company pole to a point 12 inches from the service support, including conduit and conductors required for the utility pole riser when furnished by the Contractor, will be paid for separately.
17. All mounting hardware and installation details of services shall be in accordance with utility company specifications.
18. All conduit on service supports shall be rigid metal conduit except the conduit for grounding electrode conductor (ground rod wire) shall be 1/2 inch PVC. Service entrance conduit size shall be as shown elsewhere. Conduit for branch circuit entry to enclosure shall be the same size as that shown on the layout sheets for branch circuit conduit. Rigid metal conduit shall extend a minimum of six inches underground and then coupled to the type conduit shown on the layout for that particular branch circuit. RMC shall have grounding bushings in enclosures.
19. Backfill shall be in accordance with Item 400 except for measurement and payment. Backfilling will not be paid for directly but shall be subsidiary to the various bid items.
20. Liquid tight flexible metal conduit (LFMC), may be used when meter and service enclosure are mounted 90 to 180 degrees to each other. LFMC shall not exceed 3 ft. and shall be securely supported within one ft. of each end. Each end of LFMC must have a grounding bushing or be terminated with a grounding fitting. A neutral conductor must be installed within the LFMC. Bend in LFMC shall not exceed 180 degrees. LFMC may not be installed on utility company owned poles. A pull test is required on all installed conductors, at least six inches of free conductor movement shall be demonstrated to the satisfaction of the Engineer.
21. Contractor may order concrete service support structures with 3/4" hole near top of pole for eye bolt type bracket. Eye bolt bracket may be installed as means of overhead service drop anchoring point by utility. Pole may also be center drilled in the field for installation of eye bolt bracket. When used, install bracket 6" to 12" below weatherhead.

Texas Department of Transportation
Traffic Operations Division

ELECTRICAL DETAILS-
SERVICE SUPPORT
TYPES GC AND OC

ED(9)-03

©TxDOT April 1998	DN: TXDOT	CK: TXDOT	DW: TXDOT	CK: TXDOT
REVISIONS 12-00 3-03	CONT	SECT	JOB	HIGHWAY
	DIST	COUNTY		SH

REVISION | DATE

CITY OF TEXARKANA, TEXAS
220 Texas Blvd., Texarkana, Texas 75501 903-798-3948

PROJECT: STEP
DATE: Apr 22, 2014
DESIGNED BY: MLD
DRAWN BY: MLD
CHECKED BY: BKD
APPROVED BY: BKD

ELECTRICAL DETAILS

STEP PROJECT
Dept. of Engineering & Infrastructure
City of Texarkana, Texas

DRAWING
47

Attachment: Exhibit 'B-2' STEP II Sheets 21-47 (1124 : Res No. 2014 - 067 R STEP Project II Downtown Sidewalk Enhancements DPW 14 - 02)

DISCLAIMER: The use of this standard is governed by the "Texas Engineering Practice Act". No warranty of any kind is made by TxDOT for any purpose whatsoever. TxDOT assumes no responsibility for the conversion of this standard to other formats or for incorrect results or damages resulting from its use.

I. DUCT CABLE

A. Duct cable shall be placed by the open trench method at a minimum depth of 18 inches. Bends in duct cable shall be made in the manner recommended by the manufacturer; minimum bending radius shall be 20 inches for 1 1/2 inch duct and 26 inches for 2 inch duct. Unless otherwise approved by the Engineer in writing, duct cable shall be 2 inch diameter. Handling of duct cable reels and installation of duct shall be as recommended by the manufacturer. Duct for duct cable is designed as a conduit system and shall be considered as such in NEC interpretations. Conductors shall not be spliced within a duct. Duct entering a ground box or foundation shall be coupled to a RMC elbow.

B. Duct cable shall have factory installed conductors. AWG size of electrical conductors shall be as called for in the plans or as required by the National Electrical Code. Conduit bid as High Density Polyethylene (HDPE) conduit shall meet the requirements of duct cable except that the conduit shall be supplied without factory installed conductors. HDPE conduit may be substituted for duct cable. After HDPE conduit is installed, conductors shall be installed. AWG size of electrical conductors shall be as called for in the plans.

C. Duct cable shall be extended through conduit casings in one continuous length without connection to the casing.

D. After duct cable has been installed, a pull test will be made on conductors. If conductors cannot be freely pulled, Contractor shall replace or otherwise adjust installation to free up the conductors. Duct cable ends shall be sealed with foam electrical conduit sealant or with heat-shrinking material after pull test is completed.

E. Sufficient clearance shall be left between each conduit ell so the bonding bushings may be correctly installed. Conduit cover is shown as 18 inches minimum, where run under a road, the minimum cover requirement is 24 inches.

F. All duct splices shall be by means of UL listed fittings, threaded duct with PVC threaded connector or UL listed tiewrap fitting or central Fusamatic electrically heated fusing conduit coupling installed in accordance with the manufacturer's instructions and approved by the Engineer. Glue on connectors, water pipefittings and heat shrink tubing splices will not be allowed.

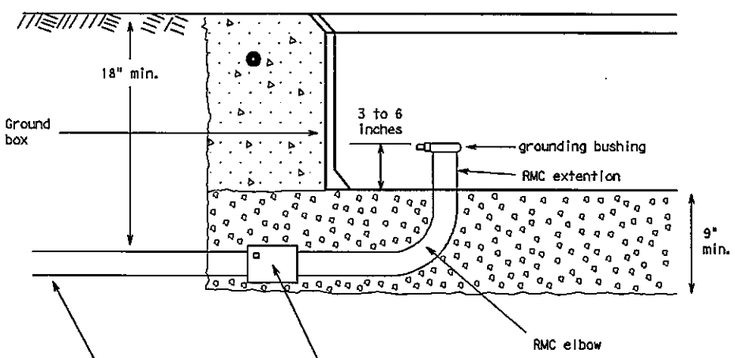

When the upper end of an RMC Ell does not enter the ground box, it may be extended with a Sch-40 PVC conduit nipple and bell end, provided there is 18" of cover over all parts of the elbow. If not, a rigid extension and ground bushing is required.

Gravel bed is to be a min. of 9 inches deep, placed under and not in the ground box. Gravel shall not encroach into the interior of the box.

Duct Cable to Conduit Adapter - Duct cable - HDPE conduit and couplings shall comply with the material specification as shown on ED(1) II Conduit A. Materials 12.

DUCT CABLE AT GROUND BOX

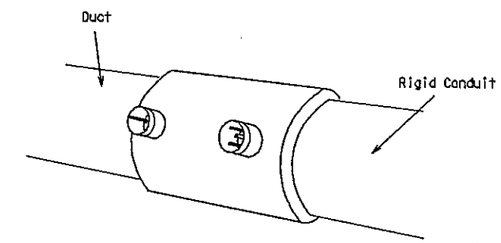

Central Fuseamatic
Electrically Heated Fusing Conduit Coupling

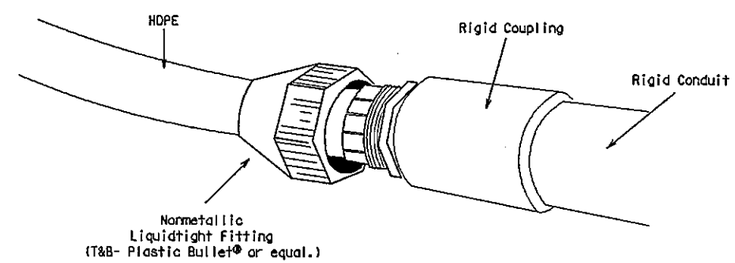

EXAMPLES OF PROPER CONNECTIONS

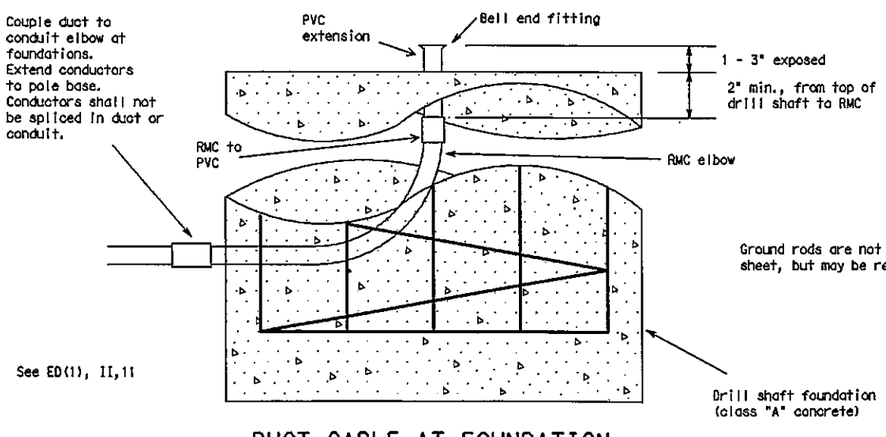

Ground rods are not shown on this standard sheet, but may be required else where in plans.

DUCT CABLE AT FOUNDATION

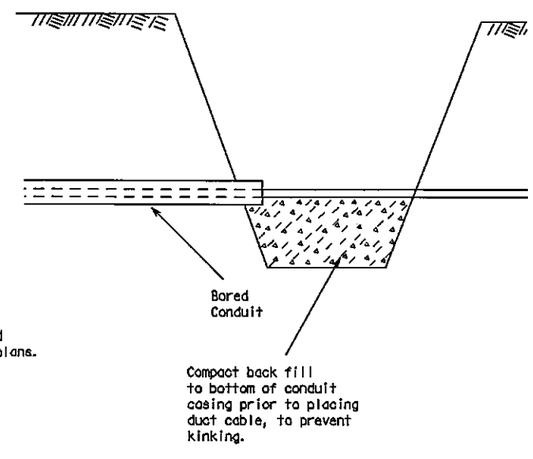

BORE PIT DETAIL

Texas Department of Transportation
Traffic Operations Division

ELECTRICAL DETAILS-
DUCT CABLE

ED(10)-03

©TxDOT April 1998

12-00	REVISIONS	FILE: TXDOT	CK: TXDOT	DN: TXDOT	CK:
3-03		CONT	SECT	JOB	HIGHWAY

REVISION | DATE

CITY OF TEXARKANA, TEXAS
220 Texas Blvd., Texarkana, Texas 75501 903-798-3948

PROJECT: STEP
DATE: Apr 22, 2014
DESIGNED BY: MJD
DRAWN BY: MJD
CHECKED BY: BKD
APPROVED BY: BKD

ELECTRICAL DETAILS

STEP PROJECT
Dept. of Engineering & Infrastructure
City of Texarkana, Texas

DRAWING

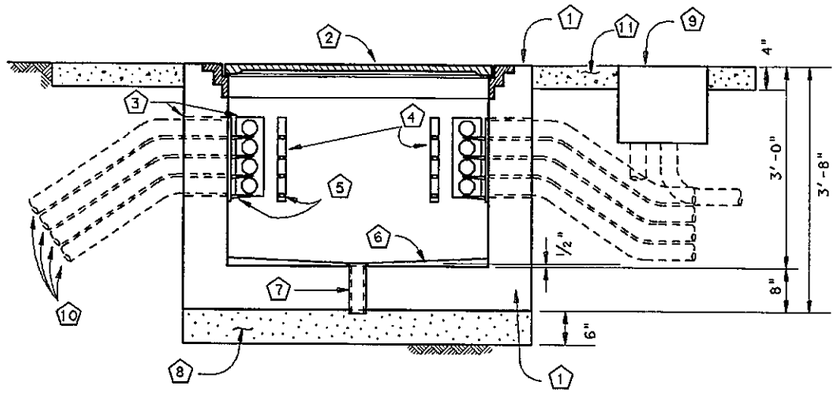

TYPICAL VERTICAL SECTION

1. Concrete ground box Type J - shall be 48" by 48" inside dimension and shall have AASHTO HS 20 wheel loading structural design. Fabricator shall submit shop drawings sealed by a Texas Licensed Structural Engineer. Shop drawings and calculations shall be for the box and lid as a unit.
2. Lid and ring shall be cast from Gray Iron in accordance with AASHTO M306, and shall be suitable for HS 20 loading or better. Proof-load testing certification in accordance with AASHTO M 306 shall be submitted. Lid shall have type T hinges and type G handles, and shall have a safety device to prevent accidental closing once the lid has been opened. Lid shall be cast with "TxDOT CONNUMICATIONS" in one inch lettering on top. Lid and ring shall be supplied together, and shall have no sharp edges. Shop drawings shall be submitted. (Neenah Foundry R-6662-TH, or equal.)
3. 18" by 9" knockout in concrete
4. Cable rack - Joslyn J5124, Chance C203-1124 or equivalent
5. Cable rach hooks - Joslyn J5131A, Chance C203-1131 or equivalent
6. Concrete drain invert, 1/2" pitch from center to walls
7. 3" drain
8. Filter material - Grade 3 aggregate or finer. See ITEM 302
9. RPM ground box, as called for in layouts, for electrical power conductors and traffic signal cables. See ED(3) for ground box details
10. Conduits (See layouts for number, details, specifications, and sizes)
11. Concrete riprap apron, Bid as ITEM 432. 1 cubic yard minimum

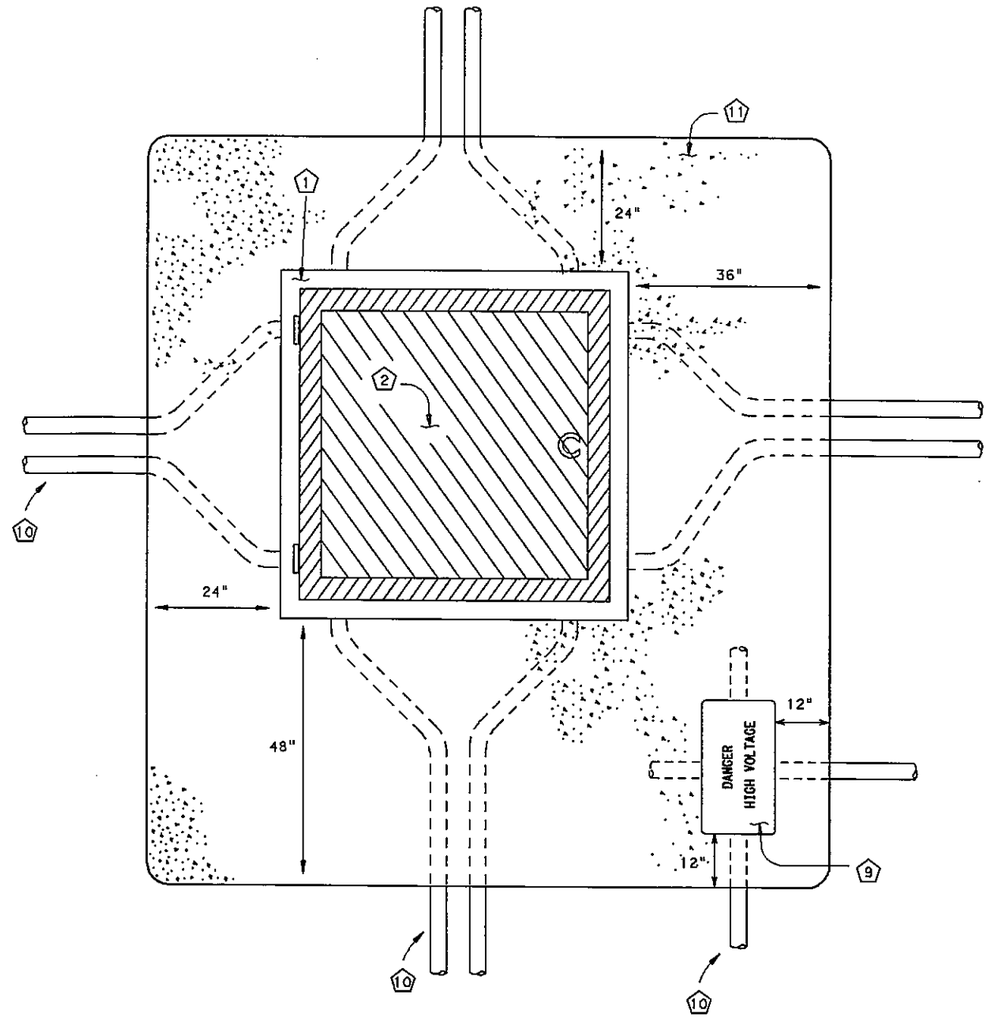

TYPICAL PLAN VIEW

GENERAL NOTES

1) Illumination, traffic signal and other conductors carrying full voltages (50 volts or greater) shall not enter the communications ground box, but shall be run into an adjacent RPM ground box, as shown in the detail.

2) Conductors in the Type J ground box shall be laid on the racks and secured in place with plastic ties. At no time shall any conductor be run through the center of the box. Contractor shall arrange conduit runs so cables shall enter and exit the box without violating the required bend radius or running throught the center of the box.

3) Riprap shown is the minimum required. Riprap shall extend to protect all conduits with less than the minimum allowed ground cover.

4) Conduits shall not extend inside the box more than 1", including the required bell end fitting or bushing. Conduits shall be securely grounted in place with Portland cement completely filling the knockout window around the conduits.

5) Rigrap and boxes shall be cast flat with a maximum slope of 0.25% (3" over 10').

6) Payment - concrete ground box Type J shall be bid as ITEM 628. RPM ground box and riprap shall be bid separately.

Texas Department of Transportation
Traffic Operations Division

CONCRETE GROUND BOX (TYPE J) FOR TRAFFIC MANAGEMENT SYSTEMS

ED(11)-03

©TxDOT July 2000

9-00	REVISIONS	DN: TxDOT	CK: TxDOT	DW: TxDOT	CK:
12-00		CONT	SECT	JOB	HIGHWAY
3-03					

REVISION | DATE

CITY OF TEXARKANA, TEXAS
220 Texas Blvd., Texarkana, Texas 75501 903-798-3846

PROJECT: STEP
DATE: Apr 22, 2014
DESIGNED BY: WLD
DRAWN BY: WLD
CHECKED BY: BKD
APPROVED BY: BKD

ELECTRICAL DETAILS

STEP PROJECT
Dept. of Engineering & Infrastructure
City of Texarkana, Texas

DRAWING

Kind is made by TxDOT for any purpose whatsoever. TxDOT assumes no responsibility for the conversion of this standard to other formats or for incorrect results or damages resulting from its use.

DISCLAIMER: The use of this standard is governed by the "Texas Engineering Practice Act". No warranty of any kind is made by TxDOT for any purpose whatsoever. TxDOT assumes no responsibility for the conversion of this standard to other formats or for incorrect results or damages resulting from its use.

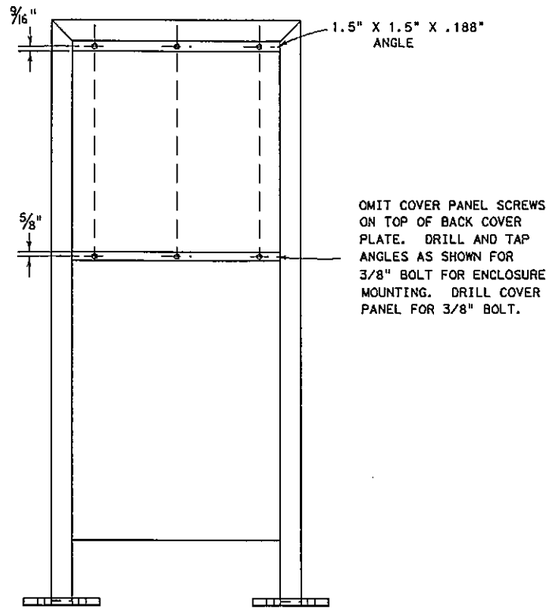

BACK ELEVATION VIEW

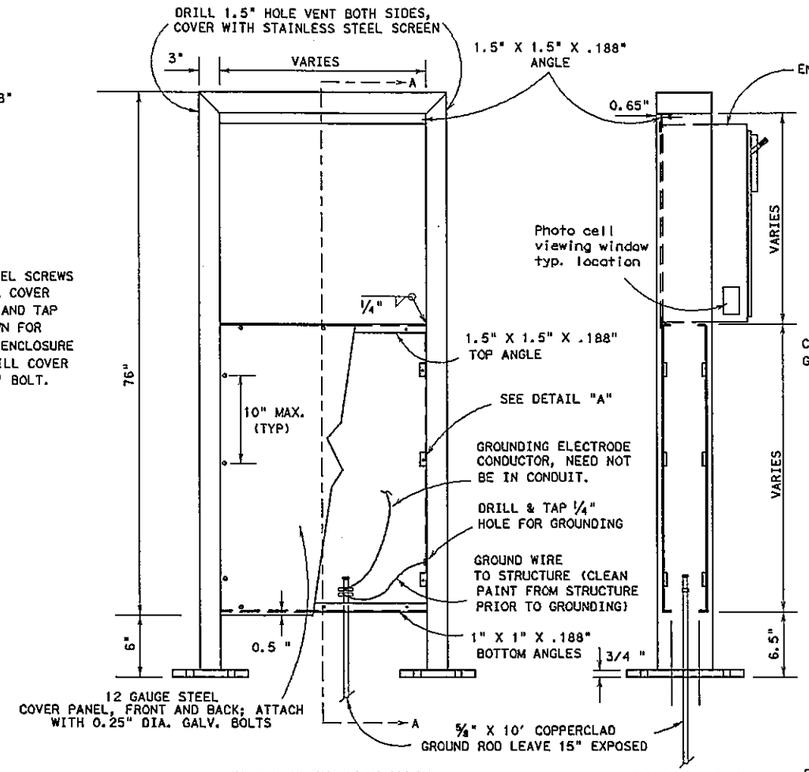

FRONT ELEVATION VIEW

SECTION A-A

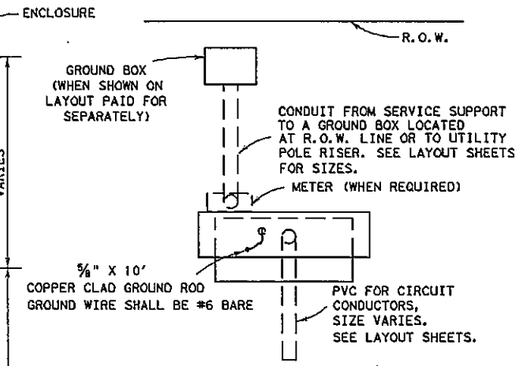

PLAN VIEW

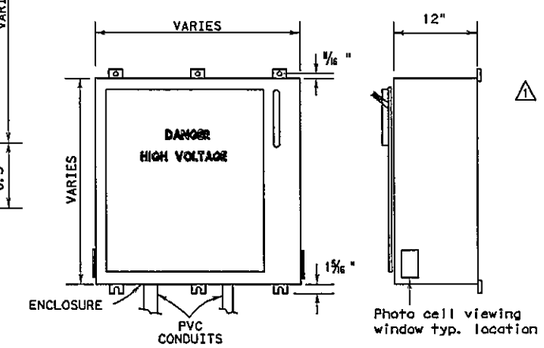

FRONT

RIGHT SIDE

ENCLOSURE

GENERAL NOTES:

1. Structure shall be designed in accordance with latest issue of AASHTO "STANDARD SPECIFICATIONS FOR STRUCTURAL SUPPORTS FOR HIGHWAY SIGNS, LUMINAIRES AND TRAFFIC SIGNALS." Structures shall be designed for 80 mph wind load with 1.3 gust factor. Shop drawings shall include ASTM material designations. Shop drawings shall be submitted for the electrical service support in accordance with Item 441, "STEEL STRUCTURES." Catalog cut sheets shall be submitted for the enclosure and equipment.
2. The structure shall be galvanized. Twelve gauge sheet covers and enclosure may be made from pre-galvanized sheeting. When shown elsewhere on the plans, structure and outside of enclosure may be painted in lieu of galvanizing.
3. Structure mounting dimensions may vary to match enclosure provided.
4. All conduit and conductors attached to the electrical service and within 12" of the electrical service will not be paid for directly, but shall be subsidiary to the electrical service. All conduit and conductors from the utility company pole to a point 12" from the electrical service, including conduit and conductors required for the utility pole riser, when furnished by the Contractor, will be paid for separately.
5. All conduits entering enclosures from underground to be sealed. Silicone will not be allowed.
6. All PVC conduits to be fitted with a bell end or bushing.
7. Support structure to be bonded to the ground rod using a #6 AWG Copper Bonding jumper to be terminated with a listed eyelet type connector connected to a 1/4-20 SS machine screw-bolt. Sheet metal screws will not be allowed for bonding. All threaded bonding connections shall be made up wrench tight. All non- conductive materials to be removed from contact surfaces.
8. Service enclosures to be labeled and stenciled see ED(5) VIII C.
9. Ground rod clamp to be UL listed for direct burial. (1)
10. Photo cell viewing window location on each side of the service enclosure to be clear of obstructure and provide a clear line of sight view and allow for the proper light level sensing by the photo cell.
11. Liquidtight flexible metal conduit may not be used on type RT(U) service supports.

STRUCTURE DATA	
TUBULAR POLE MEMBER SIZE	ANCHOR BOLTS DIA.X LENGTH X HOOK
8" X 3"X 3/16"	5/8" X 16" X 4"

COMPONENT	ASTM
TUBING MEMBERS	A500 GRADE A
BASE PLATES	A36
ANCHOR BOLTS	A307 or A36

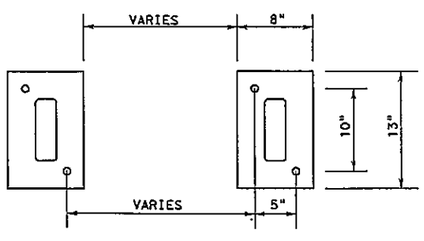

BASE PLAN VIEW

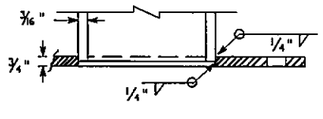

BOTTOM OF POLE

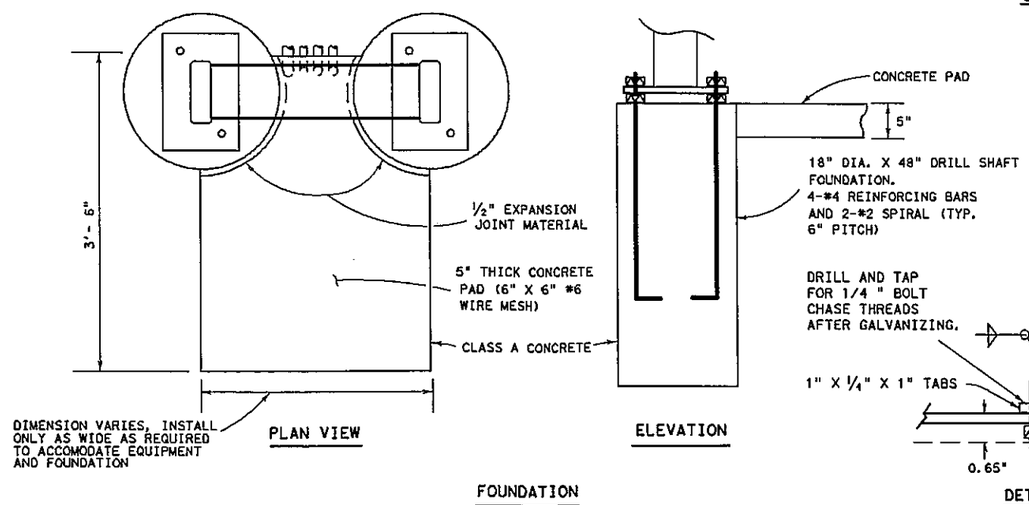

PLAN VIEW

ELEVATION

FOUNDATION

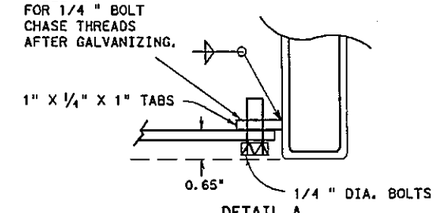

DETAIL A

Texas Department of Transportation
Traffic Operations Division

ELECTRICAL DETAILS-
ELECTRICAL SERVICE
SUPPORT TYPE RT (U)

ED(12)-03

5/03 Revision
(1) Revised notes.

© TxDOT January 1992

REVISIONS	DN: TxDOT	CK: TxDOT	DW: TxDOT	CK: TxDOT
4-98				
12-00				
3-03				

DIST	SECT	JOB	HIGHWAY

REVISION | DATE

CITY OF TEXARKANA, TEXAS
220 Texas Blvd., Texarkana, Texas 75501 903-798-3648

PROJECT: STEP
DATE: Apr 22, 2014
DESIGNED BY: MLD
DRAWN BY: MLD
CHECKED BY: BKD
APPROVED BY: BKD

ELECTRICAL DETAILS

STEP PROJECT
Dept. of Engineering & Infrastructure
City of Texarkana, Texas

DRAWING

Attachment: Exhibit 'B-3' STEP II Sheet 48-67 (1124 : Res No. 2014 - 02)
2014 - 067 R STEP Project II Downtown Sidewalk Enhancements DPW 14 - 02)

GROUND BOX - Type - Battery Box

A. MATERIALS

1. Battery box ground boxes shall be constructed such that it will be possible to install and accomodate up to 4 batteries measuring 8" x 13.5" x 10" (W x L x D).
2. All battery box ground boxes and covers shall be permanently marked either by impress or by permanent ink, with manufacturer's model number and manufacturer's name or logo.
3. Covers shall be bolted down, and bolt holes in the box shall be arranged to drain dirt.
4. Battery box ground boxes shall meet the following requirements:
   a. Battery box cover and cover ring will be manufactured from polymer concrete reinforced with continuous strands of woven or stitched borosilicate fiberglass cloth. The polymer concrete shall be made from catalyzed polyester resin, sand and aggregate, and shall have a minimum compressive strength of 11,000 psi. Polymer concrete containing chopped fiberglass or fiberglass reinforced plastic is not acceptable.
   b. Battery box ground box walls will be manufactured from fiberglass reinforced plastic reinforced with continuous strands of woven or stitched borosilicate fiberglass cloth. The fiberglass reinforced plastic shall be made from catalyzed polyester resin, lightweight filler and reinforced with woven roving and shall have a minimum compressive strength of 7,500 psi.
   c. Minimum inside dimensions shall be at least as follows (width x length x depth):
      Battery box shall be at least 15 ¼ inches x 28 ¼ inches x 14 ½ inches.
   d. Bottom edge of box or extension shall be footed with a minimum 1½ inch flange.
   e. Battery ground boxes shall withstand 600 lbs. per sq. ft. applied over the entire sidewall with less than ¼ inch deflection per foot length of box. Ground boxes and covers shall withstand a test loading of 20,000 lbs. over a 10 inch by 20 inch area centered on the cover with less than ½ inch deflection. Battery ground boxes and covers shall meet Western Underground Standards 3.6. Manufacturer shall supply certification by an independent laboratory or sealed by a Texas-Licensed Professional Engineer.
   f. Covers shall be 2 inch thick polymer concrete. All hardware shall be stainless steel. Cover shall be secured with two 1/2 inch stainless steel bolts. Bolts shall be self-retaining and shall withstand a minimum of 70 ft-lbs. torque and shall have a minimum 750 lbs. straight pull out strength. Nuts shall be floating and shall provide a minimum of 1/2 inch movement from the center of the nut. Covers shall be skid resistant, minimum 0.5 coefficient of friction. Covers shall be interchangeable between manufacturers and shall conform to the dimensions shown herein. Unless otherwise approved by the Engineer, cover shall be legibly labeled, "Traffic Signals Danger High Voltage" in minimum 1 inch letters.
   g. The battery box shall be supplied with predrilled holes to accept ⅜ inch stainless steel rods. The holes shall be installed 1 ½ inches (+/- ¼ inches) above the bottom edge of the box along the length of the box at 3 ½ inch centers beginning 4 ½ inches from the edge of the box.
   h. A minimum of seven ⅜ inch stainless steel rods threaded on both ends shall come equipped to be inserted in the predrilled holes to serve as a rack sufficient to accommodate up to four batteries. The rods shall be secured in place utilizing ⅜" stainless steel (s.s.) nuts and ⅜" X 1" s.s. flat washers.
   i. Ground boxes of the type specified above shall meet the requirements shown above. The Contractor will be permitted to furnish like materials of any manufacturer provided they are of equal quality and comply with the specifications.
   j. Two ⅜" plastic sheets measuring a nominal 6" x 24" shall be supplied which are to be placed on the secured rods upon which the batteries (supplied by others) are to be set.
   k. A minimum of four battery "bell jars" and respective tie down straps are to be supplied. These bell jars are inverted over the batteries and strapped to the batteries.

B. CONSTRUCTION METHODS

1. Battery box ground boxes shall be set on a 9 inch (minimum) bed of coarse No. 1 aggregate as defined by Item 421. Gravel shall be in place prior to setting box and conduits shall be capped. Any gravel or dirt in conduit shall be removed.
2. Construction of an apron encasing the battery box ground box including concrete and reinforcing steel is required and shall not be paid for directly but shall be subsidiary to the ground box. Reinforcing steel may be field bent. Concrete for aprons shall be considered miscellaneous concrete for testing purposes. Aprons shall be cast in place.
3. Any holes cut into the sidewall of battery box ground boxes shall be accomplished using a round hole saw or other method approved by the Engineer.

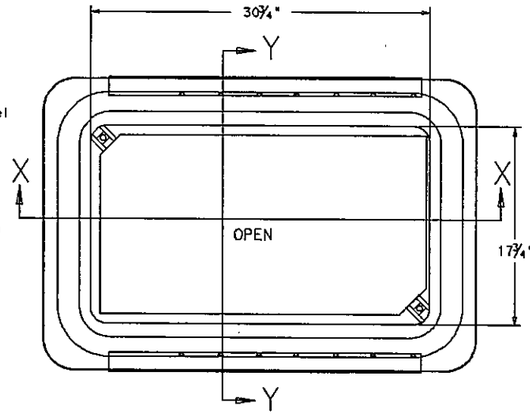

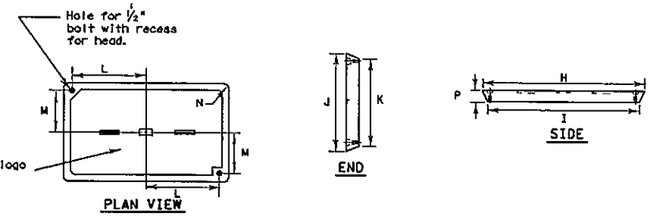

GROUND BOX COVER

GROUND BOX COVER DIMENSIONS								
BOX	DIMENSIONS (INCHES)							
SIZE	H	I	J	K	L	M	N	P
Battery box	30 ½	30 ¼	17 ½	17 ¼	13 ¼	6 ¾	1 ⅜	2

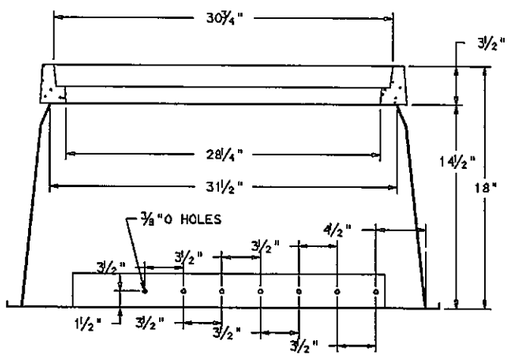

SECTION X-X

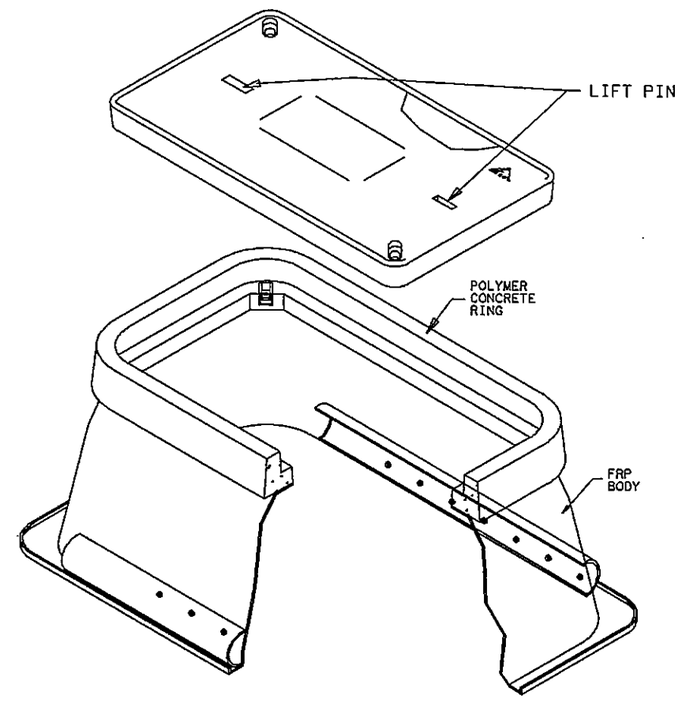

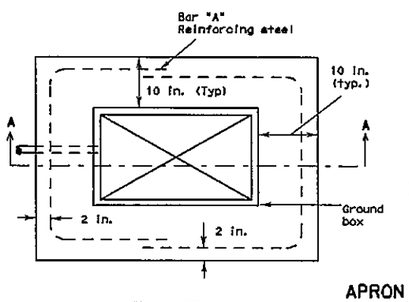

PLAN VIEW

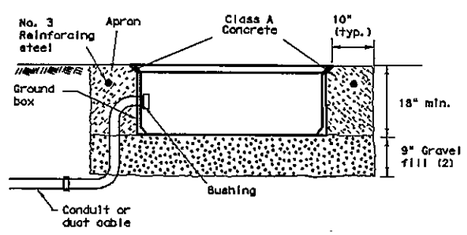

SECTION A - A

APRON FOR GROUND BOXES

(Where required)

(1) Place gravel "under" the box, not "in" the box. Gravel should not encroach on the interior volume of the box.
(2) Install bushing on the upper end of all ells.
(3) All conduits shall be installed in a neat and workmanlike manner.

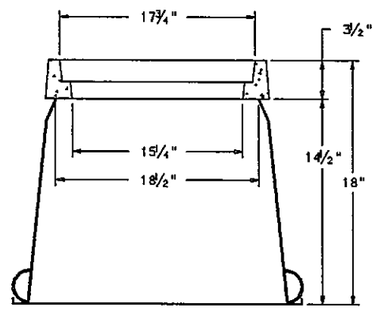

SECTION Y-Y

Texas Department of Transportation
Traffic Operations Division

ELECTRICAL DETAILS
GROUND BOXES/
BATTERY BOX

ED(13)-03

©TxDOT May 2003	DN: TxDOT	CK: TxDOT	DW: TxDOT	CK: TxDOT
REVISIONS	COUNTY	SECT	JOB	HIGHWAY
	DIST	COUNTY		SHEET NO.

71N

REVISION | DATE

CITY OF TEXARKANA, TEXAS
220 Texas Blvd., Texarkana, Texas 75501 903-798-3948

PROJECT: STEP
DATE: Apr. 22, 2014
DESIGNED BY: MLD
DRAWN BY: BKD
CHECKED BY: BKD
APPROVED BY: BKD

ELECTRICAL DETAILS

STEP PROJECT
Dept. of Engineering & Infrastructure
City of Texarkana, Texas

DRAWING

Attachment: Exhibit 'B-3' STEP II Sheet 48-67 (1124 : Res No. 2014 - 067 R STEP Project II Downtown Sidewalk Enhancements DPW 14 - 02)

DISCLAIMER:
The use of this standard is governed by the "Texas Engineering Practice Act". No warranty of any kind is made by TxDOT for any purpose whatsoever. TxDOT assumes no responsibility for the conversion of this standard to other formats or for incorrect results or damages resulting from its use.

BARRICADE AND CONSTRUCTION (BC) STANDARD SHEETS GENERAL NOTES:

1. The Barricade and Construction Standard Sheets (BC sheets) are intended to show typical examples for placement of temporary traffic control devices, construction pavement markings, and typical work zone signs. The information contained in these sheets meet or exceed the requirements shown in the "Texas Manual on Uniform Traffic Control Devices" (TMUTCD).

2. The development and design of the Traffic Control Plan (TCP) is the responsibility of the Engineer.

3. The Contractor may propose changes to the TCP that are signed and sealed by a licensed professional engineer for approval. The Engineer may develop, sign and seal Contractor proposed changes.

4. The Contractor is responsible for installing and maintaining the traffic control devices as shown in the plans. The Contractor may not move or change the approximate location of any device without the approval of the Engineer.

5. Geometric design of lane shifts and detours should, when possible, meet the applicable design criteria contained in manuals such as the American Association of State Highway and Transportation Officials (AASHTO), "A Policy on Geometric Design of Highways and Streets", the TxDOT "Roadway Design Manual" or engineering judgment.

6. When projects abut, the Engineer(s) may omit the END ROAD WORK, TRAFFIC FINES DOUBLE, and other advance warning signs if the signing would be redundant and the work areas appear continuous to the motorists. If the adjacent project is completed first, the Contractor shall erect the necessary warning signs as shown on these sheets, the TCP sheets or as directed by the Engineer. The BEGIN ROAD WORK NEXT X MILES sign shall be revised to show appropriate work zone distance.

7. The Engineer may require duplicate warning signs on the median side of divided highways where median width will permit and traffic volumes justify the signing.

8. All signs shall be constructed in accordance with the details found in the "Standard Highway Sign Designs for Texas," latest edition. Sign details not shown in this manual shall be shown in the plans or the Engineer shall provide a detail to the Contractor before the sign is manufactured.

9. The temporary traffic control devices shown in the illustrations of the BC sheets are examples. As necessary, the Engineer will determine the most appropriate traffic control devices to be used.

10. As shown on BC(2), the OBEY WARNING SIGNS STATE LAW sign and the WORK ZONE TRAFFIC FINES DOUBLE sign with plaque shall be erected in advance of the CSJ limits. However, the TRAFFIC FINES DOUBLE sign will not be required on projects consisting solely of mobile operation work, such as striping or milling edgeline rumble strips. The BEGIN ROAD WORK NEXT X MILES, CONTRACTOR and END ROAD WORK signs shall be erected at or near the CSJ limits.

11. Except for devices required by Note 10, traffic control devices should be in place only while work is actually in progress or a definite need exists.

12. The Engineer has the final decision on the location of all traffic control devices.

13. Inactive equipment and work vehicles, including workers' private vehicles must be parked away from travel lanes. They should be as close to the right-of-way line as possible, or located behind a barrier or guardrail, or as approved by the Engineer.

WORKER SAFETY APPAREL NOTES:

1. Workers on foot who are exposed to traffic or to construction equipment within the right-of-way shall wear high-visibility safety apparel meeting the requirements of ISEA "American National Standard for High-Visibility Apparel" labeled as ANSI 107-2004 standard performance for Class 2 or 3 risk exposure. Class 3 garments should be considered for high traffic volume work areas or night time work.

Only pre-qualified products shall be used. The "Compliant Work Zone Traffic Control Devices List" (CWZTCD) describes pre-qualified products and their sources and may be found on-line at the web address given below or by contacting:

Texas Department of Transportation
Traffic Operations Division - TE
Phone (512) 416-3118

THE DOCUMENTS BELOW CAN BE FOUND ON-LINE AT http://www.txdot.gov
COMPLIANT WORK ZONE TRAFFIC CONTROL DEVICES LIST (CWZTCD)
DEPARTMENTAL MATERIAL SPECIFICATIONS (DMS)
MATERIAL PRODUCER LIST (MPL)
ROADWAY DESIGN MANUAL - SEE "MANUALS (ONLINE MANUALS)"
STANDARD HIGHWAY SIGN DESIGNS FOR TEXAS (SHSD)
TEXAS MANUAL ON UNIFORM TRAFFIC CONTROL DEVICES (TMUTCD)
TRAFFIC ENGINEERING STANDARD SHEETS

SHEET 1 OF 12

Texas Department of Transportation — Traffic Operations Division Standard

BARRICADE AND CONSTRUCTION GENERAL NOTES AND REQUIREMENTS

BC(1)-13

FILE: bc-13.dgn	DN: TxDOT	CK: TxDOT	DW: TxDOT	CK: TxDOT	
© TxDOT November 2002	CONT	SECT	JOB	HIGHWAY	
REVISIONS					
4-03 5-10	DIST		COUNTY		SHEET NO.
9-07 7-13					

DATE:
FILE:

REVISION | DATE

CITY OF TEXARKANA, TEXAS
220 Texas Blvd., Texarkana, Texas 75501 903-798-3948

PROJECT: STEP
DATE: Apr 22, 2014
DESIGNED BY: MLD
DRAWN BY: MLD
CHECKED BY: BKD
APPROVED BY: BKD

TRAFFIC CONTROL DETAILS

STEP PROJECT
Dept. of Engineering & Infrastructure
City of Texarkana, Texas

DRAWING

Attachment: Exhibit 'B-3' STEP II Sheet 48-67 (1124 : Res No. 2014 - 067 R STEP Project II Downtown Sidewalk Enhancements DPW 14 - 02)

TYPICAL LOCATION OF CROSSROAD SIGNS

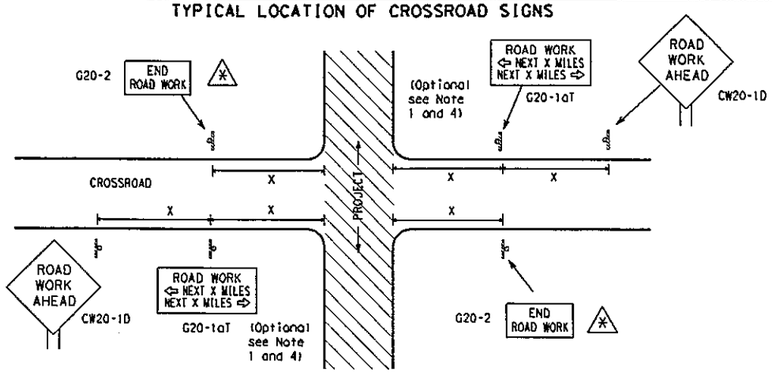

✱ May be mounted on back of "ROAD WORK AHEAD"(CW20-1D) sign with approval of engineer. (See note 2 below)

1. The typical minimum signing on a crossroad approach should be a "ROAD WORK AHEAD" (CW20-1D)sign and a (G20-2) "END ROAD WORK" sign, unless noted otherwise in plans.
2. The Engineer may use the reduced size 36" x 36" ROAD WORK AHEAD (CW20-1D) sign mounted back to back with the reduced size 36" x 18" "END ROAD WORK"(G20-2) sign on low volume crossroads (see Note 4 under "Typical Construction Warning Sign Size and Spacing"). See the "Standard Highway Sign Designs for Texas" manual for sign details. The Engineer may omit the advance warning signs on low volume crossroads. The Engineer will determine whether a road is low volume. This information shall be shown in the plans.
3. Based on existing field conditions, the Engineer/Inspector may require additional signs such as FLAGGER AHEAD, LOOSE GRAVEL, or other appropriate signs. When additional signs are required, these signs will be considered part of the minimum requirements. The Engineer/Inspector will determine the proper location and spacing of any sign not shown on the BC sheets, Traffic Control Plan sheets or the Work Zone Standard Sheets.
4. The "ROAD WORK NEXT X MILES"(G20-1aT)sign shall be required at high volume crossroads to advise motorists of the length of construction in either direction from the intersection. The Engineer will determine whether a roadway is considered high volume.
5. Additional traffic control devices may be shown elsewhere in the plans for higher volume crossroads.
6. When work occurs in the intersection area, appropriate traffic control devices, as shown elsewhere in the plans or as determined by the Engineer/Inspector, shall be in place.

T-INTERSECTION

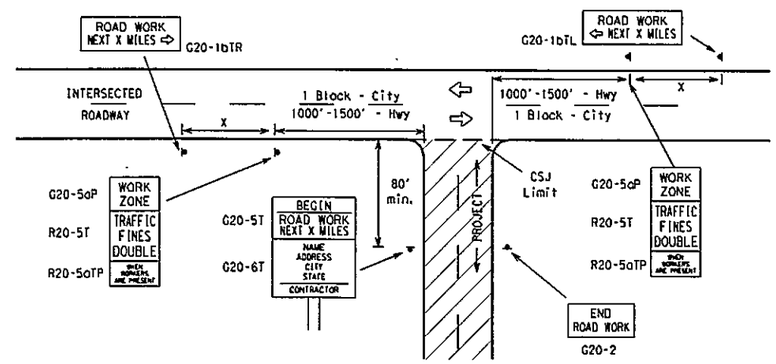

CSJ LIMITS AT T-INTERSECTION

1. The Engineer will determine the types and location of any additional traffic control devices, such as a flagger and accompanying signs, or other signs, that should be used when work is being performed at or near an intersection.
2. If construction closes the road at a T-intersection the Contractor shall place the "CONTRACTOR NAME"(G20-6T) sign behind the Type 3 Barricades for the road closure (see BC(10) also). The "ROAD WORK NEXT X MILES" left arrow(G20-1bTL) and "ROAD WORK NEXT X MILES" right arrow (G20-1bTR)" signs shall be replaced by the detour signing called for in the plans.

TYPICAL CONSTRUCTION WARNING SIGN SIZE AND SPACING [1,5,6]

SIZE

Sign Number or Series	Conventional Road	Expressway/ Freeway
CW20[4] CW21 CW22 CW23 CW25	48" x 48"	48" x 48"
CW1, CW2, CW7, CW8, CW9, CW11, CW14	36" x 36"	48" x 48"
CW3, CW4, CW5, CW6, CW8-3, CW10, CW12	48" x 48"	48" x 48"

SPACING

Posted Speed	Sign Spacing "X" △
MPH	Feet (Apprx.)
30	120
35	160
40	240
45	320
50	400
55	500[2]
60	600[2]
65	700[2]
70	800[2]
75	900[2]
80	1000[2]
*	*[3]

* For typical sign spacings on divided highways, expressways and freeways, see Part 6 of the "Texas Manual on Uniform Traffic Control Devices" (TMUTCD) typical application diagrams or TCP Standard Sheets.

△ Minimum distance from work area to first Advance Warning sign nearest the work area and/or distance between each additional sign.

GENERAL NOTES

1. Special or larger size signs may be used as necessary.
2. Distance between signs should be increased as required to have 1500 feet advance warning.
3. Distance between signs should be increased as required to have 1/2 mile or more advance warning.
4. 36" x 36" "ROAD WORK AHEAD" (CW20-1D)signs may be used on low volume crossroads at the discretion of the Engineer. See Note 2 under "Typical Location of Crossroad Signs".
5. Only diamond shaped warning sign sizes are indicated.
6. See sign size listing in "TMUTCD", Sign Appendix or the "Standard Highway Sign Designs for Texas" manual for complete list of available sign design sizes.

WORK AREAS IN MULTIPLE LOCATIONS WITHIN CSJ LIMITS

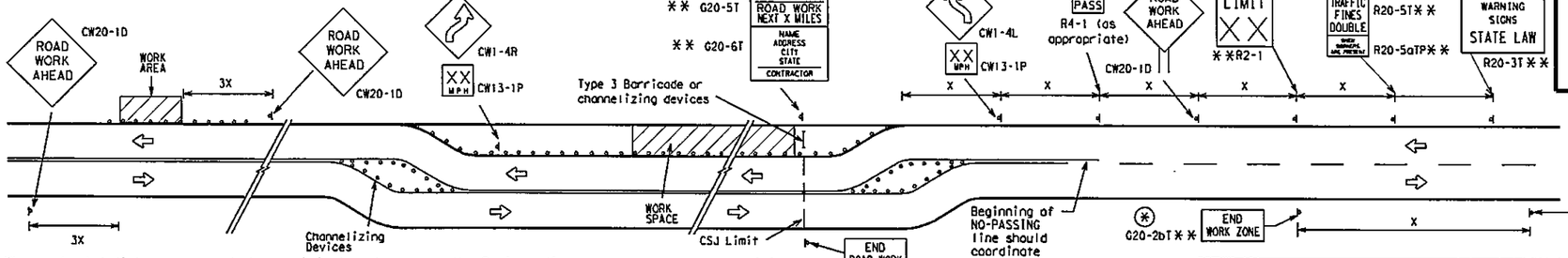

When extended distances occur between minimal work spaces, the Engineer/Inspector should ensure additional "ROAD WORK AHEAD"(CW20-1D)signs are placed in advance of these work areas to remind drivers they are still within the project limits. See the applicable TCP sheets for exact location and spacing of signs and channelizing devices.

SAMPLE LAYOUT OF SIGNING FOR WORK BEGINNING DOWNSTREAM OF THE CSJ LIMITS

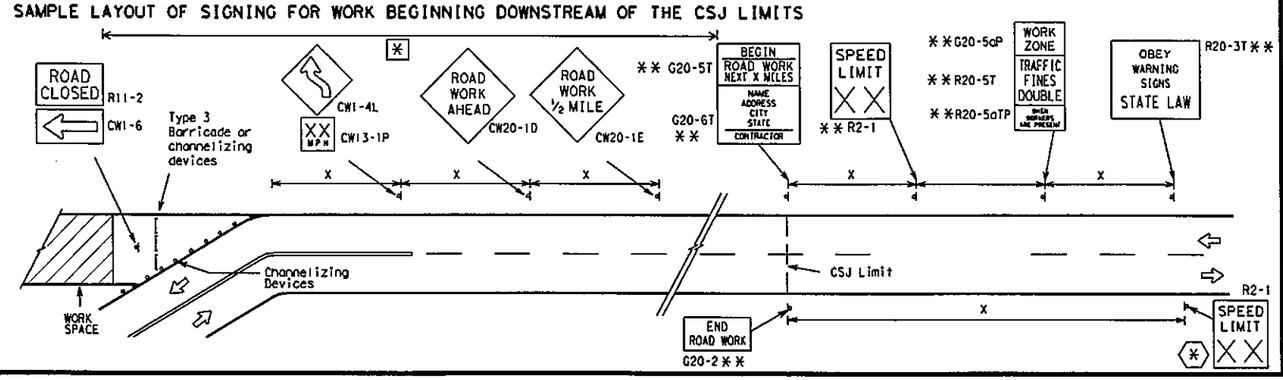

NOTES

The Contractor shall determine the appropriate distance to be placed on the G20-1 series signs and "BEGIN ROAD WORK NEXT X MILES"(G20-5T)sign for each specific project. This distance shall replace the "X" and shall be rounded to the nearest whole mile with the approval of the Engineer. No decimals shall be used.

(✱) The "BEGIN WORK ZONE"(G20-9TP) and "END WORK ZONE" (G20-2bT) shall be used as shown on the sample layout when advance signs are required outside the CSJ Limits. They inform the motorist of entering or leaving a part of the work zone lying outside the CSJ Limits where traffic fines may double if workers are present.

✱✱ Required CSJ Limit signing. See Note 10 on BC(1). TRAFFIC FINES DOUBLE signs will not be required on projects consisting solely of mobile operations work.

[✱] Area for placement of "ROAD WORK AHEAD" (CW20-1D)sign and other signs or devices as called for on the Traffic Control Plan.

(✱) Contractor will install a regulatory speed limit sign at the end of the work zone.

LEGEND	
⊢⊣	Type 3 Barricade
○○○	Channelizing Devices
▬	Sign
X	See Typical Construction Warning Sign Size and Spacing chart or the TMUTCD for sign spacing requirements.

SHEET 2 OF 12

Texas Department of Transportation — Traffic Operations Division Standard

BARRICADE AND CONSTRUCTION PROJECT LIMIT

BC(2)-13

FILE: bc-13.dgn	DN: TxDOT	CK: TxDOT	DW: TxDOT	CK: TxDOT
© TxDOT November 2002	CONT	SECT	JOB	HIGHWAY
REVISIONS 9-07 7-13	DIST		COUNTY	SHEET NO.

DRAWING

DISCLAIMER: The use of this standard is governed by the "Texas Engineering Practice Act". No warranty of any kind is made by TxDOT for any purpose whatsoever. TxDOT assumes no responsibility for the conversion of this standard to other formats or for incorrect results or damages resulting from its use.

DATE: FILE:

REVISION	DATE

CITY OF TEXARKANA, TEXAS
220 Texas Blvd., Texarkana, Texas 75501 903-798-3848

PROJECT: STEP
DATE: Apr 22, 2014
DESIGNED BY: MLD
DRAWN BY: MLD
CHECKED BY: BKD

TRAFFIC CONTROL DETAILS

STEP PROJECT
Dept. of Engineering & Infrastructure
City of Texarkana, Texas

Attachment: Exhibit 'B-3' STEP II Sheet 48-67 (1124 : Res No. 2014 - 067 R STEP Project II Downtown Sidewalk Enhancements DPW 14 - 02)

TYPICAL APPLICATION OF WORK ZONE SPEED LIMIT SIGNS

Work zone speed limits shall be regulatory, established in accordance with the "Procedures for Establishing Speed Zones," and approved by the Texas Transportation Commission, or by City Ordinance when within Incorporated City Limits.

Reduced speeds should only be posted in the vicinity of work activity and not throughout the entire project.

Regulatory work zone speed signs (R2-1) shall be removed or covered during periods when they are not needed.

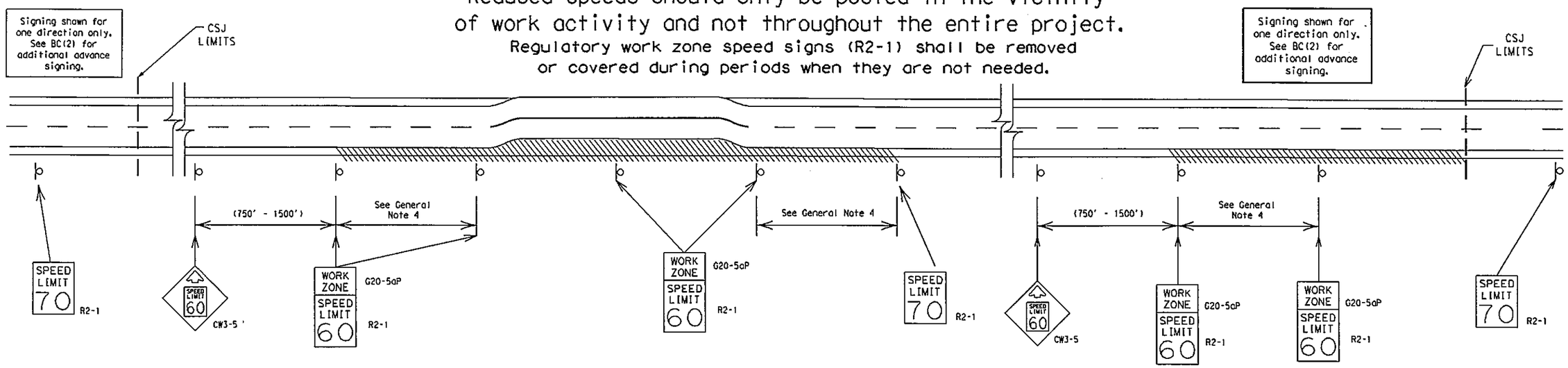

GUIDANCE FOR USE:

LONG/INTERMEDIATE TERM WORK ZONE SPEED LIMITS

This type of work zone speed limit should be included on the design of the traffic control plans when restricted geometrics with a lower design speed are present in the work zone and modification of the geometrics to a higher design speed is not feasible.

Long/Intermediate Term Work Zone Speed Limit signs, when approved as described above, should be posted and visible to the motorist when work activity is present. Work activity may also be defined as a change in the roadway that requires a reduced speed for motorists to safely negotiate the work area, including:

a) rough road or damaged pavement surface
b) substantial alteration of roadway geometrics (diversions)
c) construction detours
d) grade
e) width
f) other conditions readily apparent to the driver

As long as any of these conditions exist, the work zone speed limit signs should remain in place.

SHORT TERM WORK ZONE SPEED LIMITS

This type of work zone speed limit may be included on the design of the traffic control plans when workers or equipment are not behind concrete barrier, when work activity is within 10 feet of the traveled way or actually in the travelled way.

Short Term Work Zone Speed Limit signs should be posted and visible to the motorists only when work activity is present. When work activity is not present, signs shall be removed or covered.
(See Removing or Covering on BC(4)).

GENERAL NOTES

1. Regulatory work zone speed limits should be used only for sections of construction projects where speed control is of major importance.
2. Regulatory work zone speed limit signs shall be placed on supports at a 7 foot minimum mounting height.
3. Speed zone signs are illustrated for one direction of travel and are normally posted for each direction of travel.
4. Frequency of work zone speed limit signs should be:
   40 mph and greater 0.2 to 2 miles
   35 mph and less 0.2 to 1 mile
5. Regulatory speed limit signs shall have black legend and border on a white reflective background (See "Reflective Sheeting" on BC(4)).
6. Fabrication, erection and maintenance of the "ADVANCE SPEED LIMIT" (CW3-5) sign, "WORK ZONE" (G20-5aP) plaque and the "SPEED LIMIT" (R2-1) signs shall not be paid for directly, but shall be considered subsidiary to Item 502.
7. Turning signs from view, laying signs over or down will not be allowed, unless as otherwise noted under "REMOVING OR COVERING" on BC(4).
8. Techniques that may help reduce traffic speeds include but are not limited to:
   A. Law enforcement.
   B. Flagger stationed next to sign.
   C. Portable changeable message sign (PCMS).
   D. Low-power (drone) radar transmitter.
   E. Speed monitor trailers or signs.
9. Speeds shown on details above are for illustration only. Work Zone Speed Limits should only be posted as approved for each project.
10. For more specific guidance concerning the type of work, work zone conditions and factors impacting allowable regulatory construction speed zone reduction see TxDOT form #1204 in the TxDOT e-form system.

SHEET 3 OF 12

Texas Department of Transportation — Traffic Operations Division Standard

BARRICADE AND CONSTRUCTION WORK ZONE SPEED LIMIT

BC(3)-13

FILE: bc-13.dgn	DN: TxDOT	CK: TxDOT	DW: TxDOT	CK: TxDOT	
© TxDOT November 2002	CONT	SECT	JOB	HIGHWAY	
REVISIONS 9-07 7-13	DIST		COUNTY		SHEET NO.

97

DISCLAIMER: The use of this standard is governed by the "Texas Engineering Practice Act". No warranty of any kind is made by TxDOT for any purpose whatsoever. TxDOT assumes no responsibility for the conversion of this standard to other formats or for incorrect results or damages resulting from its use.

DATE:
FILE:

REVISION | DATE

CITY OF TEXARKANA, TEXAS
220 Texas Blvd., Texarkana, Texas 75501 903-798-3946

PROJECT: STEP
DATE: Apr 28, 2014
DESIGNED BY: MLD
DRAWN BY: MLD
CHECKED BY: BKD
APPROVED BY: BKD

TRAFFIC CONTROL DETAILS

STEP PROJECT
Dept. of Engineering & Infrastructure
City of Texarkana, Texas

DRAWING

Attachment: Exhibit 'B-3' STEP II Sheet 48-67 (1124 : Res No. 2014 - 067 R STEP Project II Downtown Sidewalk Enhancements DPW 14 - 02)

TYPICAL MINIMUM CLEARANCES FOR LONG TERM AND INTERMEDIATE TERM SIGNS

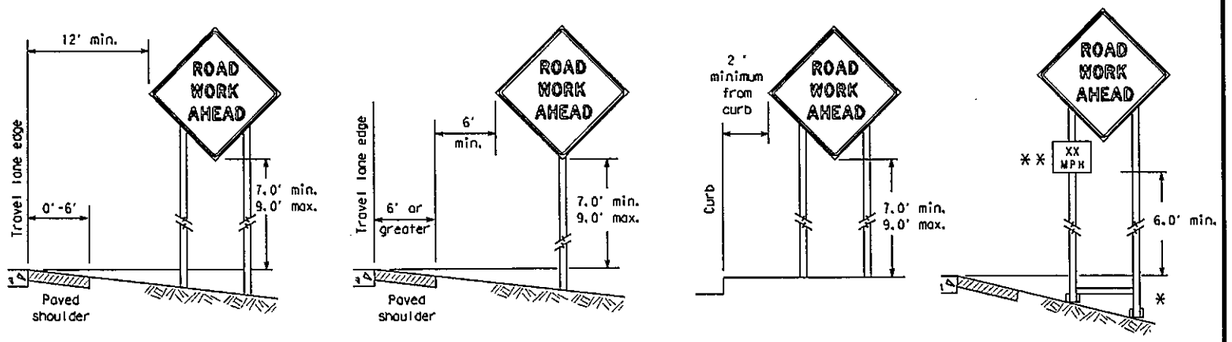

* When placing skid supports on unlevel ground, the leg post lengths must be adjusted so the sign appears straight and plumb. Objects shall NOT be placed under skids as a means of leveling.

** When plaques are placed on dual-leg supports, they should be attached to the upright nearest the travel lane. Supplemental plaques (advisory or distance) should not cover the surface of the parent sign.

ATTACHMENT FOR SIGN SUPPORTS

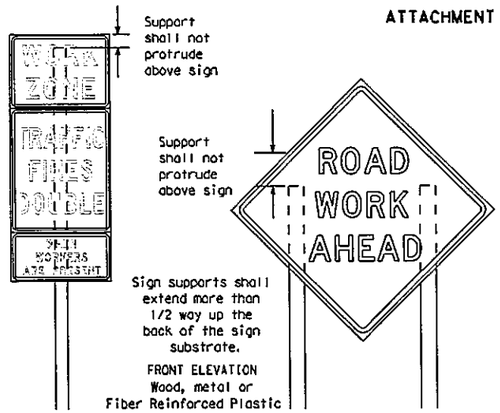

Splicing embedded perforated square metal tubing in order to extend post height will only be allowed when the splice is made using four bolts, two above and two below the splice point. Splice must be located entirely behind the sign substrate, not near the base of the support. Splice insert lengths should be at least 5 times nominal post size, centered on the splice and of at least the same gauge material.

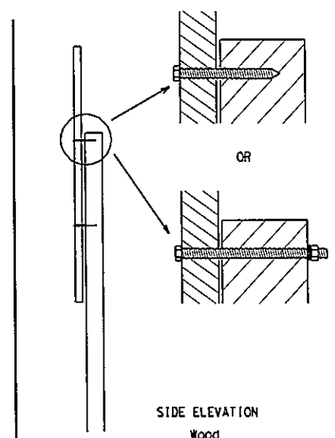

Attachment to wooden supports will be by bolts and nuts or screws. Use TxDOT's or manufacturer's recommended procedures for attaching sign substrates to other types of sign supports

Nails shall NOT be allowed. Each sign shall be attached directly to the sign support. Multiple signs shall not be joined or spliced by any means. Wood supports shall not be extended or repaired by splicing or other means.

STOP/SLOW PADDLES

1. STOP/SLOW paddles are the primary method to control traffic by flaggers. The STOP/SLOW paddle size should be 24" x 24" as detailed below.
2. When used at night, the STOP/SLOW paddle shall be retroreflectorized.
3. STOP/SLOW paddles may be attached to a staff with a minimum length of 6' to the bottom of the sign.
4. Any lights incorporated into the STOP or SLOW paddle faces shall only be as specifically described in Section 6E.03 Hand Signaling Devices in the TMUTCD.

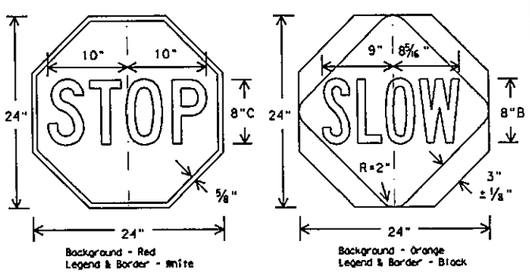

CONTRACTOR REQUIREMENTS FOR MAINTAINING PERMANENT SIGNS WITHIN THE PROJECT LIMITS

1. Permanent signs are used to give notice of traffic laws or regulations, call attention to conditions that are potentially hazardous to traffic operations, show route designations, destinations, directions, distances, services, points of interest, and other geographical, recreational, or cultural information. Drivers proceeding through a work zone need the same, if not better route guidance as normally installed on a roadway without construction.
2. When permanent regulatory or warning signs conflict with work zone conditions, remove or cover the permanent signs until the permanent sign message matches the roadway condition.
3. When existing permanent signs are moved and relocated due to construction purposes, they shall be visible to motorists at all times.
4. If existing signs are to be relocated on their original supports, they shall be installed on crashworthy bases as shown on the SMD Standard sheets. The signs shall meet the required mounting heights shown on the BC Sheets or the SMD Standards. This work should be paid for under the appropriate pay item for relocating existing signs.
5. If permanent signs are to be removed and relocated using temporary supports, the Contractor shall use crashworthy supports as shown on the BC sheets or the CWZTCD. The signs shall meet the required mounting heights shown on the BC Sheets or the SMD Standards during construction. This work should be paid for under the appropriate pay item for relocating existing signs.
6. Any sign or traffic control device that is struck or damaged by the Contractor or his/her construction equipment shall be replaced as soon as possible by the Contractor to ensure proper guidance for the motorists. This will be subsidiary to Item 502.

GENERAL NOTES FOR WORK ZONE SIGNS

1. Contractor shall install and maintain signs in a straight and plumb condition and/or as directed by the Engineer.
2. Wooden sign posts shall be painted white.
3. Barricades shall NOT be used as sign supports.
4. All signs shall be installed in accordance with the plans or as directed by the Engineer. Signs shall be used to regulate, warn, and guide the traveling public safely through the work zone.
5. The Contractor may furnish either the sign design shown in the plans or in the "Standard Highway Sign Designs for Texas" (SHSD). The Engineer/Inspector may require the Contractor to furnish other work zone signs that are shown in the TMUTCD but may have been omitted from the plans. Any variation in the plans shall be documented by written agreement between the Engineer and the Contractor's Responsible Person. All changes must be documented in writing before being implemented. This can include documenting the changes in the Inspector's TxDOT diary and having both the Inspector and Contractor initial and date the agreed upon changes.
6. The Contractor shall furnish sign supports listed in the "Compliant Work Zone Traffic Control Device List" (CWZTCD). The Contractor shall install the sign support in accordance with the manufacturer's recommendations. If there is a question regarding installation procedures, the Contractor shall furnish the Engineer a copy of the manufacturer's installation recommendations so the Engineer can verify the correct procedures are being followed.
7. The Contractor is responsible for installing signs on approved supports and replacing signs with damaged or cracked substrates and/or damaged or marred reflective sheeting as directed by the Engineer/Inspector.
8. Identification markings may be shown only on the back of the sign substrate. The maximum height of letters and/or company logos used for identification shall be 1 inch.
9. The Contractor shall replace damaged wood posts. New or damaged wood sign posts shall not be spliced.

DURATION OF WORK (as defined by the "Texas Manual on Uniform Traffic Control Devices" Part 6)

1. The types of sign supports, sign mounting height, the size of signs, and the type of sign substrates can vary based on the type of work being performed. The Engineer is responsible for selecting the appropriate size sign for the type of work being performed. The Contractor is responsible for ensuring the sign support, sign mounting height and substrate meets manufacturer's recommendations in regard to crashworthiness and duration of work requirements.
   a. Long-term stationary - work that occupies a location more than 3 days.
   b. Intermediate-term stationary - work that occupies a location more than one daylight period up to 3 days, or nighttime work lasting more than one hour.
   c. Short-term stationary - daytime work that occupies a location for more than 1 hour in a single daylight period.
   d. Short, duration - work that occupies a location up to 1 hour.
   e. Mobile - work that moves continuously or intermittently (stopping for up to approximately 15 minutes.)

SIGN MOUNTING HEIGHT

1. The bottom of Long-term/Intermediate-term signs shall be at least 7 feet, but not more than 9 feet, above the paved surface, except as shown for supplemental plaques mounted below other signs.
2. The bottom of Short-term/Short Duration signs shall be a minimum of 1 foot above the pavement surface but no more than 2 feet above the ground.
3. Long-term/Intermediate-term Signs may be used in lieu of Short-term/Short Duration signing.
4. Short-term/Short Duration signs shall be used only during daylight and shall be removed at the end of the workday or raised to appropriate Long-term/Intermediate sign height.
5. Regulatory signs shall be mounted at least 7 feet, but not more than 9 feet, above the paved surface regardless of work duration.

SIZE OF SIGNS

1. The Contractor shall furnish the sign sizes shown on BC (2) unless otherwise shown in the plans or as directed by the Engineer.

SIGN SUBSTRATES

1. The Contractor shall ensure the sign substrate is installed in accordance with the manufacturer's recommendations for the type of sign support that is being used. The CWZTCD lists each substrate that can be used on the different types and models of sign supports.
2. "Mesh" type materials are NOT an approved sign substrate, regardless of the tightness of the weave.
3. All wooden individual sign panels fabricated from 2 or more pieces shall have one or more plywood cleat, 1/2" thick by 6" wide, fastened to the back of the sign and extending fully across the sign. The cleat shall be attached to the back of the sign using wood screws that do not penetrate the face of the sign panel. The screws shall be placed on both sides of the splice and spaced at 6" centers. The Engineer may approve other methods of splicing the sign face.

REFLECTIVE SHEETING

1. All signs shall be retroreflective and constructed of sheeting meeting the color and retro-reflectivity requirements of DMS-8300 for rigid signs or DMS-8310 for roll-up signs. The web address for DMS specifications is shown on BC(1).
2. White sheeting, meeting the requirements of DMS-8300 Type A, shall be used for signs with a white background.
3. Orange sheeting, meeting the requirements of DMS-8300 Type B_{FL} or Type C_{FL}, shall be used for rigid signs with orange backgrounds.

SIGN LETTERS

1. All sign letters and numbers shall be clear, and open rounded type uppercase alphabet letters as approved by the Federal Highway Administration (FHWA) and as published in the "Standard Highway Sign Design for Texas" manual. Signs, letters and numbers shall be of first class workmanship in accordance with Department Standards and Specifications.

REMOVING OR COVERING

1. When sign messages may be confusing or do not apply, the signs shall be removed or completely covered.
2. Long-term stationary or intermediate stationary signs installed on square metal tubing may be turned away from traffic 90 degrees when the sign message is not applicable. This technique may not be used for signs installed in the median of divided highways or near any intersections where the sign may be seen from approaching traffic.
3. Signs installed on wooden skids shall not be turned at 90 degree angles to the roadway. These signs should be removed or completely covered when not required.
4. When signs are covered, the material used shall be opaque, such as heavy mil black plastic, or other materials which will cover the entire sign face and maintain their opaque properties under automobile headlights at night, without damaging the sign sheeting.
5. Burlap shall NOT be used to cover signs.
6. Duct tape or other adhesive material shall NOT be affixed to a sign face.
7. Signs and anchor stubs shall be removed and holes backfilled upon completion of work.

SIGN SUPPORT WEIGHTS

1. Where sign supports require the use of weights to keep from turning over, the use of sandbags with dry, cohesionless sand should be used.
2. The sandbags will be tied shut to keep the sand from spilling and to maintain a constant weight.
3. Rock, concrete, iron, steel or other solid objects shall not be permitted for use as sign support weights.
4. Sandbags should weigh a minimum of 35 lbs and a maximum of 50 lbs.
5. Sandbags shall be made of a durable material that tears upon vehicular impact. Rubber (such as tire inner tubes) shall NOT be used.
6. Rubber ballasts designed for channelizing devices should not be used for ballast on portable sign supports. Sign supports designed and manufactured with rubber bases may be used when shown on the CWZTCD list.
7. Sandbags shall only be placed along or laid over the base supports of the traffic control device and shall not be suspended above ground level or hung with rope, wire, chains or other fasteners. Sandbags shall be placed along the length of the skids to weigh down the sign support.
8. Sandbags shall NOT be placed under the skid and shall not be used to level sign supports placed on slopes.

FLAGS ON SIGNS

1. Flags may be used to draw attention to warning signs. When used the flag shall be 16 inches square or larger and shall be orange or fluorescent red-orange in color. Flags shall not be allowed to cover any portion of the sign face.

SHEET 4 OF 12

Texas Department of Transportation — Traffic Operations Division Standard

BARRICADE AND CONSTRUCTION TEMPORARY SIGN NOTES

BC(4)-13

FILE: bc-13.dgn	DN: TxDOT	CK: TxDOT	DW: TxDOT	CK: TxDOT	
© TxDOT November 2002	CONT	SECT	JOB	HIGHWAY	
REVISIONS 9-07 7-13	DIST		COUNTY		SHEET NO.

98

CITY OF TEXARKANA, TEXAS
220 Texas Blvd., Texarkana, Texas 75501 903-798-3948

REVISION | DATE

PROJECT: STEP
DATE: Apr 22, 2014
DESIGNED BY: MJD
DRAWN BY: MJD
CHECKED BY: MJD
APPROVED BY: BKD

TRAFFIC CONTROL DETAILS

STEP PROJECT
Dept. of Engineering & Infrastructure
City of Texarkana, Texas

DRAWING

kind is made by TxDOT for any purpose whatsoever. TxDOT assumes no responsibility for the conversion of this standard to other formats or for incorrect results or damages resulting from its use.

DATE:
FILE:

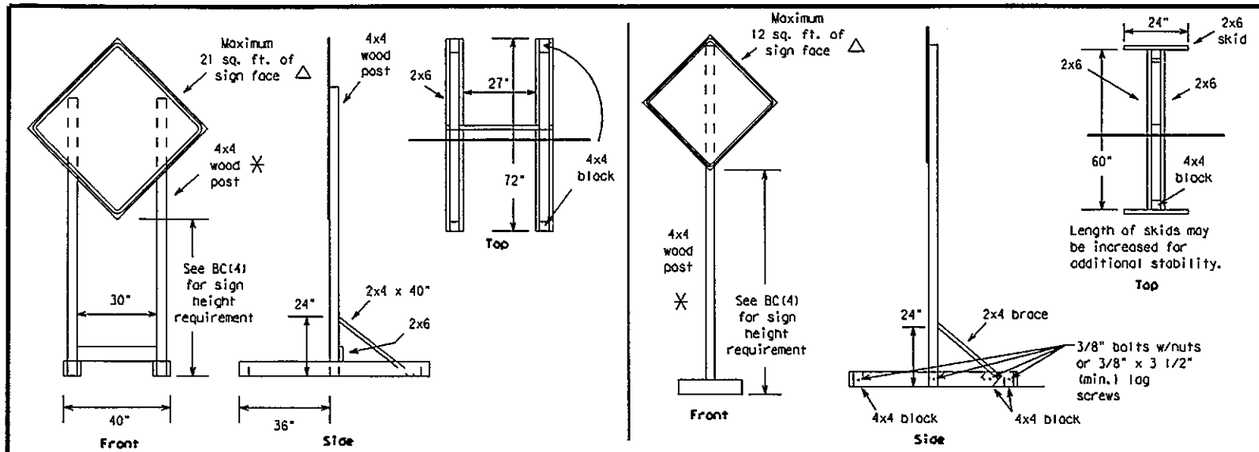

SKID MOUNTED WOOD SIGN SUPPORTS

LONG/INTERMEDIATE TERM STATIONARY - PORTABLE SKID MOUNTED SIGN SUPPORTS □

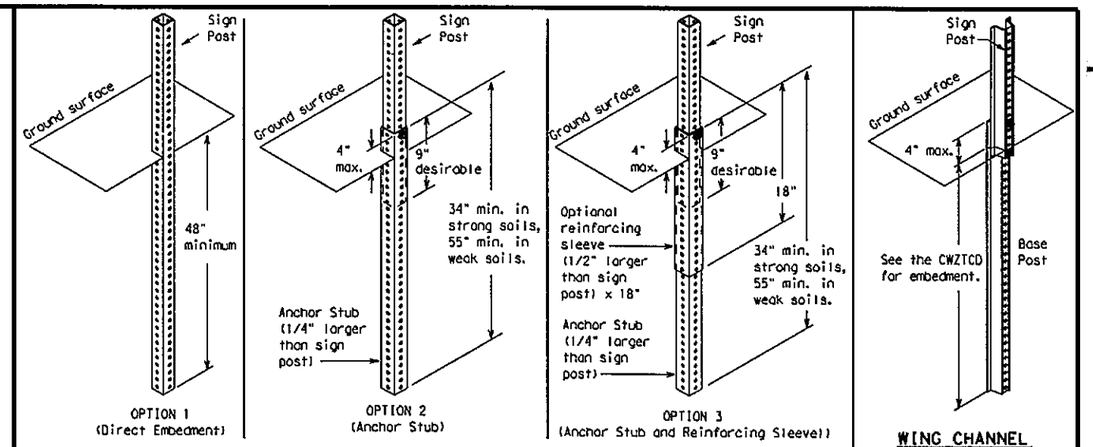

PERFORATED SQUARE METAL TUBING

WING CHANNEL
Lap-splice/base bolted anchor

GROUND MOUNTED SIGN SUPPORTS

Refer to the CWZTCD and the manufacturer's installation procedure for each type sign support.
The maximum sign square footage shall adhere to the manufacturer's recommendation.
Two post installations can be used for larger signs.

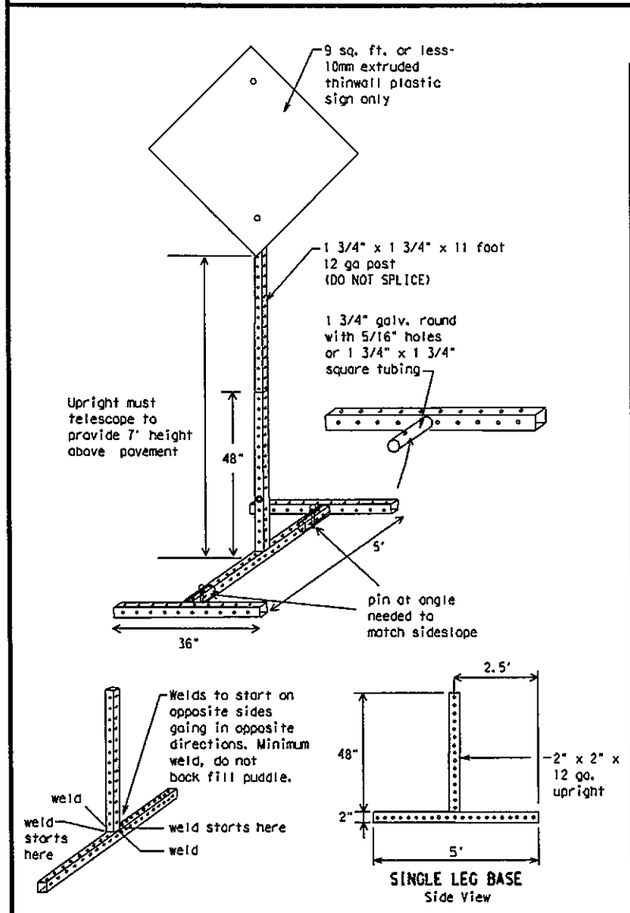

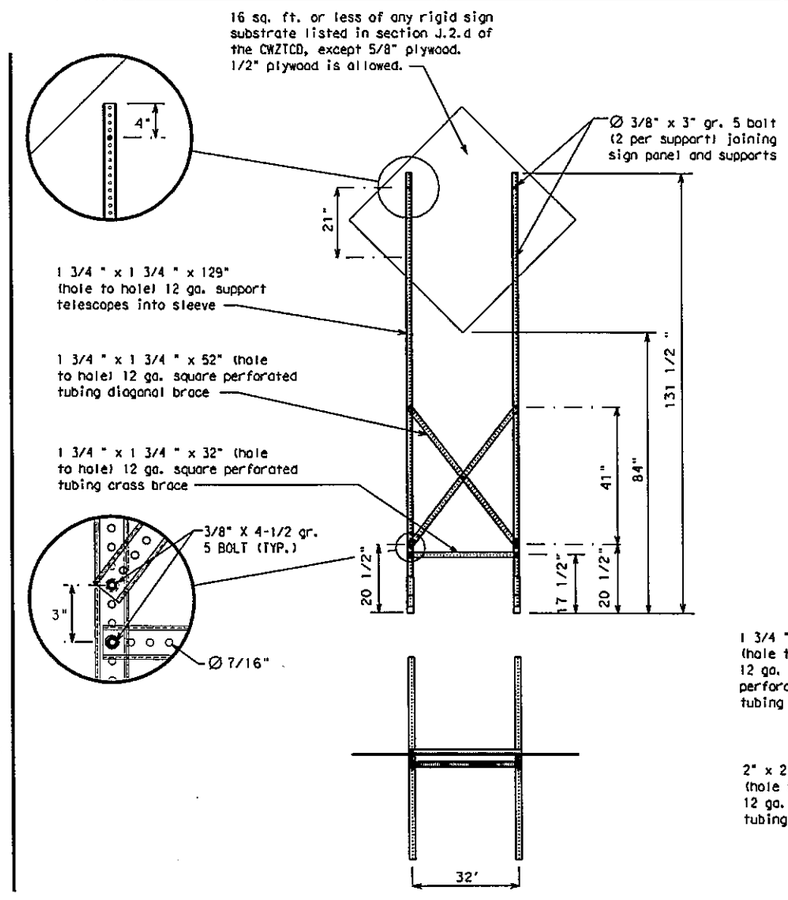

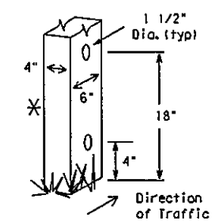

Nominal Post Size	Number of Posts	Maximum Sq. feet of Sign Face	Minimum Soil Embedment	Drilled Hole(s) Required
4 x 4	1	12	36"	NO
4 x 4	2	21	36"	NO
4 x 6	1	21	36"	YES
4 x 6	2	36	36"	YES

WOOD POST SYSTEM FOR GROUND MOUNTED SIGN SUPPORTS

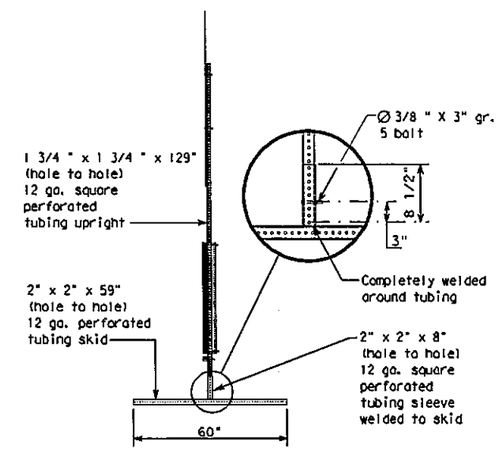

SKID MOUNTED PERFORATED SQUARE STEEL TUBING SIGN SUPPORTS

WEDGE ANCHORS

Both steel and plastic Wedge Anchor Systems as shown on the SMD Standard Sheets may be used as temporary sign supports for signs up to 10 square feet of sign face. They may be set in concrete or in sturdy soils if approved by the Engineer. (See web address for "Traffic Engineering Standard Sheets" on BC(1)).

OTHER DESIGNS

MORE DETAILS OF APPROVED LONG/INTERMEDIATE AND SHORT TERM SUPPORTS CAN BE FOUND ON THE CWZTCD LIST. SEE BC(1) FOR WEBSITE LOCATION.

GENERAL NOTES

1. Nails may be used in the assembly of wooden sign supports, but 3/8" bolts with nuts or 3/8" x 3 1/2" lag screws must be used on every joint for final connection.
2. No more than 2 sign posts shall be placed within a 7 ft. circle, except for specific materials noted on the CWZTCD List.
3. When project is completed, all sign supports and foundations shall be removed from the project site. This will be considered subsidiary to Item 502.

□ See BC(4) for definition of "Work Duration."

✳ Wood sign posts MUST be one piece. Splicing will NOT be allowed. Posts shall be painted white.

△ See the CWZTCD for the type of sign substrate that can be used for each approved sign support.

SHEET 5 OF 12

Texas Department of Transportation — Traffic Operations Division Standard

BARRICADE AND CONSTRUCTION TYPICAL SIGN SUPPORT

BC(5)-13

FILE: bc-13.dgn	DN: TxDOT	CK: TxDOT	DW: TxDOT	CK: TxDOT
© TxDOT November 2002	CONT	SECT	JOB	HIGHWAY
REVISIONS 9-07 7-13	DIST		COUNTY	SHEET NO.

99

The use of this standard is governed by the "Texas Engineering Practice Act". No warranty of any kind is made by TxDOT for any purpose whatsoever. TxDOT assumes no responsibility for the conversion of this standard to other formats or for incorrect results or damages resulting from its use.

DATE:
FILE:

REVISION | DATE

CITY OF TEXARKANA, TEXAS
220 Texas Blvd., Texarkana, Texas 75501 903-798-3848

PROJECT: STEP
DATE: Apr 22, 2014
DESIGNED BY: MLD
DRAWN BY: MLD
CHECKED BY: BKD
APPROVED BY: BKD

TRAFFIC CONTROL DETAILS

STEP PROJECT
Dept. of Engineering & Infrastructure
City of Texarkana, Texas

DRAWING

Attachment: Exhibit 'B-3' STEP II Sheet 48-67 (1124 : Res No. 2014 - 067 R STEP Project II Downtown Sidewalk Enhancements DPW 14 - 02)

WHEN NOT IN USE, REMOVE THE PCMS FROM THE RIGHT-OF-WAY OR PLACE THE PCMS BEHIND BARRIER OR GUARDRAIL WITH SIGN PANEL TURNED PARALLEL TO TRAFFIC

PORTABLE CHANGEABLE MESSAGE SIGNS

1. The Engineer/Inspector shall approve all messages used on portable changeable message signs (PCMS).
2. Messages on PCMS should contain no more than 8 words (about four to eight characters per word), not including simple words such as "TO," "FOR," "AT," etc.
3. Messages should consist of a single phase, or two phases that alternate. Three-phase messages are not allowed. Each phase of the message should convey a single thought, and must be understood by itself.
4. Use the word "EXIT" to refer to an exit ramp on a freeway; i.e., "EXIT CLOSED." Do not use the term "RAMP."
5. Always use the route or interstate designation (IH, US, SH, FM) along with the number when referring to a roadway.
6. When in use the bottom of a stationary PCMS message panel should be a minimum 7 feet above the roadway, where possible.
7. The message term "WEEKEND" should be used only if the work is to start on Saturday morning and end by Sunday evening at midnight. Actual days and hours of work should be displayed on the PCMS if work is to begin on Friday evening and/or continue into Monday morning.
8. The Engineer/Inspector may select one of two options which are available for displaying a two-phase message on a PCMS. Each phase may be displayed for either four seconds each or for three seconds each.
9. Do not "flash" messages or words included in a message. The message should be steady burn or continuous while displayed.
10. Do not present redundant information on a two-phase message; i.e., keeping two lines of the message the same and changing the third line.
11. Do not use the word "Danger" in message.
12. Do not display the message "LANES SHIFT LEFT" or "LANES SHIFT RIGHT" on a PCMS. Drivers do not understand the message.
13. Do not display messages that scroll horizontally or vertically across the face of the sign.
14. The following table lists abbreviated words and two-word phrases that are acceptable for use on a PCMS. Both words in a phrase must be displayed together. Words or phrases not on this list should not be abbreviated, unless shown in the TMUTCD.
15. PCMS character height should be at least 18 inches for trailer mounted units. They should be visible from at least 1/2 (.5) mile and the text should be legible from at least 600 feet at night and 800 feet in daylight. Truck mounted units must have a character height of 10 inches and must be legible from at least 400 feet.
16. Each line of text should be centered on the message board rather than left or right justified.
17. If disabled, the PCMS should default to an illegible display that will not alarm motorists and will only be used to alert workers that the PCMS has malfunctioned. A pattern such as a series of horizontal solid bars is appropriate.

WORD OR PHRASE	ABBREVIATION	WORD OR PHRASE	ABBREVIATION
Access Road	ACCS RD	Major	MAJ
Alternate	ALT	Miles	MI
Avenue	AVE	Miles Per Hour	MPH
Best Route	BEST RTE	Minor	MNR
Boulevard	BLVD	Monday	MON
Bridge	BRDG	Normal	NORM
Cannot	CANT	North	N
Center	CTR	Northbound	(route) N
Construction Ahead	CONST AHD	Parking	PKING
CROSSING	XING	Road	RD
Detour Route	DETOUR RTE	Right Lane	RT LN
Do Not	DONT	Saturday	SAT
East	E	Service Road	SERV RD
Eastbound	(route) E	Shoulder	SHLDR
Emergency	EMER	Slippery	SLIP
Emergency Vehicle	EMER VEH	South	S
Entrance, Enter	ENT	Southbound	(route) S
Express Lane	EXP LN	Speed	SPD
Expressway	EXPWY	Street	ST
XXXX Feet	XXXX FT	Sunday	SUN
Fog Ahead	FOG AHD	Telephone	PHONE
Freeway	FRWY, FWY	Temporary	TEMP
Freeway Blocked	FWY BLKD	Thursday	THURS
Friday	FRI	To Downtown	TO DWNTN
Hazardous Driving	HAZ DRIVING	Traffic	TRAF
Hazardous Material	HAZMAT	Travelers	TRVLRS
High-Occupancy	HOV	Tuesday	TUES
Vehicle Highway	HWY	Time Minutes	TIME MIN
Hour(s)	HR, HRS	Upper Level	UPR LEVEL
Information	INFO	Vehicles (s)	VEH, VEHS
It Is	ITS	Warning	WARN
Junction	JCT	Wednesday	WED
Left	LFT	Weight Limit	WT LIMIT
Left Lane	LFT LN	West	W
Lane Closed	LN CLOSED	Westbound	(route) W
Lower Level	LWR LEVEL	Wet Pavement	WET PVMT
Maintenance	MAINT	Will Not	WONT

Roadway designation = IH-number, US-number, SH-number, FM-number

RECOMMENDED PHASES AND FORMATS FOR PCMS MESSAGES DURING ROADWORK ACTIVITIES

(The Engineer may approve other messages not specifically covered here.)

Phase 1: Condition Lists

Road/Lane/Ramp Closure List

FREEWAY CLOSED X MILE	FRONTAGE ROAD CLOSED
ROAD CLOSED AT SH XXX	SHOULDER CLOSED XXX FT
ROAD CLSD AT FM XXXX	RIGHT LN CLOSED XXX FT
RIGHT X LANES CLOSED	RIGHT X LANES OPEN
CENTER LANE CLOSED	DAYTIME LANE CLOSURES
NIGHT LANE CLOSURES	I-XX SOUTH EXIT CLOSED
VARIOUS LANES CLOSED	EXIT XXX CLOSED X MILE
EXIT CLOSED	RIGHT LN TO BE CLOSED
MALL DRIVEWAY CLOSED	X LANES CLOSED TUE - FRI
XXXXXXXX BLVD CLOSED	

Other Condition List

ROADWORK XXX FT	ROAD REPAIRS XXXX FT
FLAGGER XXXX FT	LANE NARROWS XXXX FT
RIGHT LN NARROWS XXXX FT	TWO-WAY TRAFFIC XX MILE
MERGING TRAFFIC XXXX FT	CONST TRAFFIC XXX FT
LOOSE GRAVEL XXXX FT	UNEVEN LANES XXXX FT
DETOUR X MILE	ROUGH ROAD XXXX FT
ROADWORK PAST SH XXXX	ROADWORK NEXT FRI-SUN
BUMP XXXX FT	US XXX EXIT X MILES
TRAFFIC SIGNAL XXXX FT	LANES SHIFT *

* LANES SHIFT in Phase 1 must be used with STAY IN LANE in Phase 2.

Phase 2: Possible Component Lists

Action to Take/Effect on Travel List

MERGE RIGHT	FORM X LINES RIGHT
DETOUR NEXT X EXITS	USE XXXXX RD EXIT
USE EXIT XXX	USE EXIT I-XX NORTH
STAY ON US XXX SOUTH	USE I-XX E TO I-XX N
TRUCKS USE US XXX N	WATCH FOR TRUCKS
WATCH FOR TRUCKS	EXPECT DELAYS
EXPECT DELAYS	PREPARE TO STOP
REDUCE SPEED XXX FT	END SHOULDER USE
USE OTHER ROUTES	WATCH FOR WORKERS
STAY IN LANE *	

Location List

AT FM XXXX
BEFORE RAILROAD CROSSING
NEXT X MILES
PAST US XXX EXIT
XXXXXXX TO XXXXXXX
US XXX TO FM XXXX

Warning List

SPEED LIMIT XX MPH
MAXIMUM SPEED XX MPH
MINIMUM SPEED XX MPH
ADVISORY SPEED XX MPH
RIGHT LANE EXIT
USE CAUTION
DRIVE SAFELY
DRIVE WITH CARE

** Advance Notice List

TUE-FRI XX AM-X PM
APR XX-XX X PM-X AM
BEGINS MONDAY
BEGINS MAY XX
MAY X-X XX PM - XX AM
NEXT FRI-SUN
XX AM TO XX PM
NEXT TUE AUG XX
TONIGHT XX PM-XX AM

** See Application Guidelines Note 6.

APPLICATION GUIDELINES

1. Only 1 or 2 phases are to be used on a PCMS.
2. The 1st phase (or both) should be selected from the "Road/Lane/Ramp Closure List" and the "Other Condition List".
3. A 2nd phase can be selected from the "Action to Take/Effect on Travel, Location, General Warning, or Advance Notice Phase Lists".
4. A Location Phase is necessary only if a distance or location is not included in the first phase selected.
5. If two PCMS are used in sequence, they must be separated by a minimum of 1000 ft. Each PCMS shall be limited to two phases, and should be understandable by themselves.
6. For advance notice, when the current date is within seven days of the actual work date, calendar days should be replaced with days of the week. Advance notification should typically be for no more than one week prior to the work.

WORDING ALTERNATIVES

1. The words RIGHT, LEFT and ALL can be interchanged as appropriate.
2. Roadway designations (H, US, SH, FM and LP can be interchanged as appropriate.
3. EAST, WEST, NORTH and SOUTH (or abbreviations E, W, N and S) can be interchanged as appropriate.
4. Highway names and numbers replaced as appropriate.
5. ROAD, HIGHWAY and FREEWAY can be interchanged as needed.
6. AHEAD may be used instead of distances if necessary.
7. FT and MI, MILE and MILES interchanged as appropriate.
8. AT, BEFORE and PAST interchanged as needed.
9. Distances or AHEAD can be eliminated from the message if a location phase is used.

PCMS SIGNS WITHIN THE R.O.W. SHALL BE BEHIND GUARDRAIL OR CONCRETE BARRIER OR SHALL HAVE A MINIMUM OF FOUR (4) PLASTIC DRUMS PLACED PERPENDICULAR TO TRAFFIC ON THE UPSTREAM SIDE OF THE PCMS, WHEN EXPOSED TO ONE DIRECTION OF TRAFFIC. WHEN EXPOSED TO TWO WAY TRAFFIC, THE FOUR DRUMS SHOULD BE PLACED WITH ONE DRUM AT EACH OF THE FOUR CORNERS OF THE UNIT.

FULL MATRIX PCMS SIGNS

1. When Full Matrix PCMS signs are used, the character height and legibility/visibility requirements shall be maintained as listed in Note 15 under "PORTABLE CHANGEABLE MESSAGE SIGNS" above.
2. When symbol signs, such as the "Flagger Symbol" (CW20-7) are represented graphically on the Full Matrix PCMS sign and, with the approval of the Engineer, it shall maintain the legibility/visibility requirement listed above.
3. When symbol signs are represented graphically on the Full Matrix PCMS, they shall only supplement the use of the static sign represented, and shall not substitute for, or replace that sign.
4. A full matrix PCMS may be used to simulate a flashing arrow board provided it meets the visibility, flash rate and dimming requirements on BC(7), for the same size arrow.

SHEET 6 OF 12

Texas Department of Transportation — Traffic Operations Division Standard

BARRICADE AND CONSTRUCTION PORTABLE CHANGEABLE MESSAGE SIGN (PCMS)

BC(6)-13

FILE: bc-13.dgn	DN: TxDOT	CK: TxDOT	DW: TxDOT	CK: TxDOT
© TxDOT November 2002	CONT	SECT	JOB	HIGHWAY
REVISIONS 9-07 7-13	DIST		COUNTY	SHEET NO.

100

The use of this standard is governed by the "Texas Engineering Practice Act". No warranty of any kind is made by TxDOT for any purpose whatsoever. TxDOT assumes no responsibility for the conversion of this standard to other formats or for incorrect results or damages resulting from its use.

DATE:
FILE:

REVISION | DATE

CITY OF TEXARKANA, TEXAS
220 Texas Blvd., Texarkana, Texas 75501 903-798-3848

PROJECT: STEP
DATE: Apr 22, 2014
DESIGNED BY: NLD
DRAWN BY: NLD
CHECKED BY: BKD
APPROVED BY: BKD

TRAFFIC CONTROL DETAILS

STEP PROJECT
Dept. of Engineering & Infrastructure
City of Texarkana, Texas

DRAWING

Attachment: Exhibit 'B-3' STEP II Sheet 48-67 (1124 : Res No. 2014 - 067 R STEP Project II Downtown Sidewalk Enhancements DPW 14 - 02)

1. Barrier Reflectors shall be pre-qualified, and conform to the color and reflectivity requirements of DMS-8600. A list of prequalified Barrier Reflectors can be found at the Material Producer List web address shown on BC(1).
2. Color of Barrier Reflectors shall be as specified in the TMUTCD. The cost of the reflectors shall be considered subsidiary to Item 512.

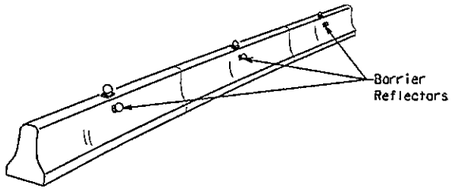

CONCRETE TRAFFIC BARRIER (CTB)

3. Where traffic is on one side of the CTB, two (2) Barrier Reflectors shall be mounted in approximately the midsection of each section of CTB. An alternate mounting location is uniformly spaced at one end of each CTB. This will allow for attachment of a barrier grapple without damaging the reflector. The Barrier Reflector mounted on the side of the CTB shall be located directly below the reflector mounted on top of the barrier, as shown in the detail above.
4. Where CTB separates two-way traffic, three barrier reflectors shall be mounted on each section of CTB. The reflector unit on top shall have two yellow reflective faces (Bi-Directional)while the reflectors on each side of the barrier shall have one yellow reflective face, as shown in the detail above.
5. When CTB separates traffic traveling in the same direction, no barrier reflectors will be required on top of the CTB.
6. Barrier Reflector units shall be yellow or white in color to match the edgeline being supplemented.
7. Maximum spacing of Barrier Reflectors is forty (40) feet.
8. Pavement markers or temporary flexible-reflective roadway marker tabs shall NOT be used as CTB delineation.
9. Attachment of Barrier Reflectors to CTB shall be per manufacturer's recommendations.
10. Missing or damaged Barrier Reflectors shall be replaced as directed by the Engineer.
11. Single slope barriers shall be delineated as shown on the above detail.

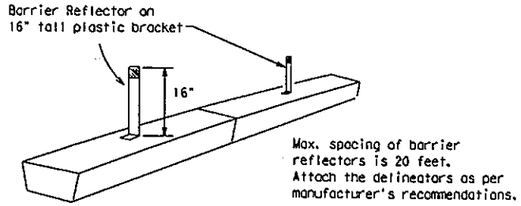

LOW PROFILE CONCRETE BARRIER (LPCB)

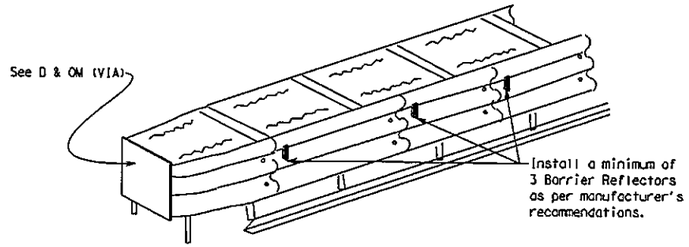

DELINEATION OF END TREATMENTS

END TREATMENTS FOR CTB'S USED IN WORK ZONES

End treatments used on CTB's in work zones shall meet crashworthy standards as defined in the National Cooperative Highway Research Report 350. Refer to the CWZTCD List for approved end treatments and manufacturers.

BARRIER REFLECTORS FOR CONCRETE TRAFFIC BARRIER AND ATTENUATORS

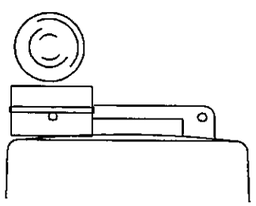

Type C Warning Light or approved substitute mounted on a drum adjacent to the travel way.

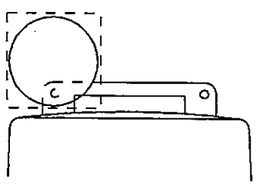

Warning reflector may be round or square. Must have a yellow reflective surface area of at least 30 square inches

WARNING LIGHTS

1. Warning lights shall meet the requirements of the TMUTCD.
2. Warning lights shall NOT be installed on barricades.
3. Type A-Low Intensity Flashing Warning Lights are commonly used with drums. They are intended to warn of or mark a potentially hazardous area. Their use shall be as indicated on this sheet and/or other sheets of the plans by the designation "FL". The Type A Warning Lights shall not be used with signs manufactured with Type B_{FL} or C_{FL} Sheeting meeting the requirements of Departmental Material Specification DMS-8300.
4. Type-C and Type D 360 degree Steady Burn Lights are intended to be used in a series for delineation to supplement other traffic control devices. Their use shall be as indicated on this sheet and/or other sheets of the plans by the designation "SB".
5. The Engineer/Inspector or the plans shall specify the location and type of warning lights to be installed on the traffic control devices.
6. When required by the Engineer, the Contractor shall furnish a copy of the warning lights certification. The warning light manufacturer will certify the warning lights meet the requirements of the latest ITE Purchase Specifications for Flashing and Steady-Burn Warning Lights.
7. When used to delineate curves, Type-C and Type D Steady Burn Lights should only be placed on the outside of the curve, not the inside.
8. The location of warning lights and warning reflectors on drums shall be as shown elsewhere in the plans.

WARNING LIGHTS MOUNTED ON PLASTIC DRUMS

1. Type A flashing warning lights are intended to warn drivers that they are approaching or are in a potentially hazardous area.
2. Type A random flashing warning lights are not intended for delineation and shall not be used in a series.
3. A series of sequential flashing warning lights placed on channelizing devices to form a merging taper may be used for delineation. If used, the successive flashing of the sequential warning lights should occur from the beginning of the taper to the end of the merging taper in order to identify the desired vehicle path. The rate of flashing for each light shall be 65 flashes per minute, plus or minus 10 flashes.
4. Type C and D steady-burn warning lights are intended to be used in a series to delineate the edge of the travel lane on detours, on lane changes, on lane closures, and on other similar conditions.
5. Type A, Type C and Type D warning lights shall be installed at locations as detailed on other sheets in the plans.
6. Warning lights shall not be installed on a drum that has a sign, chevron or vertical panel.
7. The maximum spacing for warning lights on drums should be identical to the channelizing device spacing.

WARNING REFLECTORS MOUNTED ON PLASTIC DRUMS AS A SUBSTITUTE FOR TYPE C (STEADY BURN) WARNING LIGHTS

1. A warning reflector or approved substitute may be mounted on a plastic drum as a substitute for a Type C, steady burn warning light at the discretion of the Contractor unless otherwise noted in the plans.
2. The warning reflector shall be yellow in color and shall be manufactured using a sign substrate approved for use with plastic drums listed on the CWZTCD.
3. The warning reflector shall have a minimum retroreflective surface area (one-side) of 30 square inches.
4. Round reflectors shall be fully reflectorized, including the area where attached to the drum.
5. Square substrates must have a minimum of 30 square inches of reflectorized sheeting. They do not have to be reflectorized where it attaches to the drum.
6. The side of the warning reflector facing approaching traffic shall have sheeting meeting the color and retroreflectivity requirements for DMS 8300-Type B or Type C.
7. When used near two-way traffic, both sides of the warning reflector shall be reflectorized.
8. The warning reflector should be mounted on the side of the handle nearest approaching traffic.
9. The maximum spacing for warning reflectors should be identical to the channelizing device spacing requirements.

Arrow Boards may be located behind channelizing devices in place for a shoulder taper or merging taper, otherwise they shall be delineated with four (4) channelizing devices placed perpendicular to traffic on the upstream side of traffic.

1. The Flashing Arrow Board should be used for all lane closures on multi-lane roadways, or slow moving maintenance or construction activities on the travel lanes.
2. Flashing Arrow Boards should not be used on two-lane, two-way roadways, detours, diversions or work on shoulders unless the "CAUTION" display (see detail below) is used.
3. The Engineer/Inspector shall choose all appropriate signs, barricades and/or other traffic control devices that should be used in conjunction with the Flashing Arrow Board.
4. The Flashing Arrow Board should be able to display the following symbols:

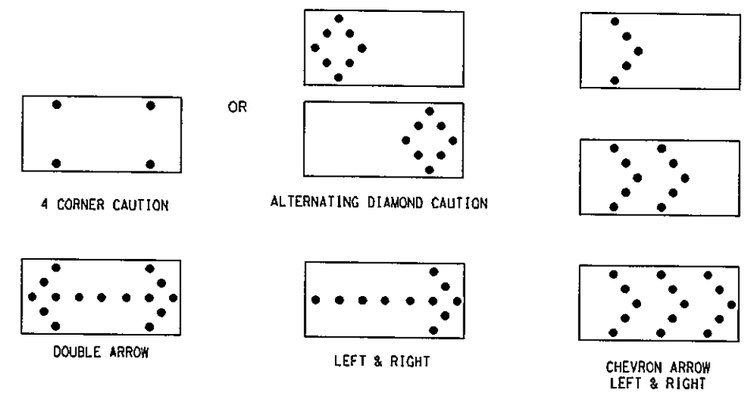

5. The "CAUTION" display consists of four corner lamps flashing simultaneously, or the Alternating Diamond Caution mode as shown.
6. The straight line caution display is NOT ALLOWED.
7. The Flashing Arrow Board shall be capable of minimum 50 percent dimming from rated lamp voltage. The flashing rate of the lamps shall not be less than 25 nor more than 40 flashes per minute.
8. Minimum lamp "on time" shall be approximately 50 percent for the flashing arrow and equal intervals of 25 percent for each sequential phase of the flashing chevron.
9. The sequential arrow display is NOT ALLOWED.
10. The flashing arrow display is the TxDOT standard; however, the sequential Chevron display may be used during daylight operations.
11. The Flashing Arrow Board shall be mounted on a vehicle, trailer or other suitable support.
12. A Flashing Arrow Board SHALL NOT BE USED to laterally shift traffic.
13. A full matrix PCMS may be used to simulate a Flashing Arrow Board provided it meets visibility, flash rate and dimming requirements on this sheet for the same size arrow.
14. Minimum mounting height of trailer mounted Arrow Boards should be 7 feet from roadway to bottom of panel.

REQUIREMENTS			
TYPE	MINIMUM SIZE	MINIMUM NUMBER OF PANEL LAMPS	MINIMUM VISIBILITY DISTANCE
B	30 x 60	13	3/4 mile
C	48 x 96	15	1 mile

ATTENTION

Flashing Arrow Boards shall be equipped with automatic dimming devices.

WHEN NOT IN USE, REMOVE THE ARROW BOARD FROM THE RIGHT-OF-WAY OR PLACE THE ARROW BOARD BEHIND CONCRETE TRAFFIC BARRIER OR GUARDRAIL.

FLASHING ARROW BOARDS

SHEET 7 OF 12

TRUCK-MOUNTED ATTENUATORS

1. Truck-mounted attenuators (TMA) used on TxDOT facilities must meet the requirements outlined in the National Cooperative Highway Research Report No. 350 (NCHRP 350) or the Manual for Assessing Safety Hardware (MASH).
2. Refer to the CWZTCD for the requirements of Level 2 or Level 3 TMAs.
3. Refer to the CWZTCD for a list of approved TMAs.
4. TMAs are required on freeways unless otherwise noted in the plans.
5. A TMA should be used anytime that it can be positioned 30 to 100 feet in advance of the area of crew exposure without adversely affecting the work performance.
6. The only reason a TMA should not be required is when a work area is spread down the roadway and the work crew is on extended distance from the TMA.

Texas Department of Transportation — Traffic Operations Division Standard

BARRICADE AND CONSTRUCTION ARROW PANEL, REFLECTORS, WARNING LIGHTS & ATTENUATOR

BC(7)-13

FILE: bc-13.dgn	DN: TxDOT	CK: TxDOT	DW: TxDOT	CK: TxDOT
© TxDOT November 2002	CONT	SECT	JOB	HIGHWAY
REVISIONS 9-07 7-13	DIST		COUNTY	SHEET NO.

101

REVISION | DATE

CITY OF TEXARKANA, TEXAS
220 Texas Blvd., Texarkana, Texas 75501 903-798-3948

PROJECT: STEP
DATE: Apr 08, 2014
DESIGNED BY: MLD
DRAWN BY: MLD
CHECKED BY: BKD
APPROVED BY: BKD

TRAFFIC CONTROL DETAILS

STEP PROJECT
Dept. of Engineering & Infrastructure
City of Texarkana, Texas

DRAWING

DATE:
FILE:

Attachment: Exhibit 'B-3' STEP II Sheet 48-67 (1124 : Res No. 2014 - 067 R STEP Project II Downtown Sidewalk Enhancements DPW 14 - 02)

GENERAL NOTES

1. For long term stationary work zones on freeways, drums shall be used as the primary channelizing device.
2. For intermediate term stationary work zones on freeways, drums should be used as the primary channelizing device but may be replaced in tangent sections by vertical panels, or 42" two-piece cones. In tangent sections one-piece cones may be used with the approval of the Engineer but only if personnel are present on the project at all times to maintain the cones in proper position and location.
3. For short term stationary work zones on freeways, drums are the preferred channelizing device but may be replaced in tapers, transitions and tangent sections by vertical panels, two-piece cones or one-piece cones as approved by the Engineer.
4. Drums and all related items shall comply with the requirements of the current version of the "Texas Manual on Uniform Traffic Control Devices" (TMUTCD) and the "Compliant Work Zone Traffic Control Devices List" (CWZTCD).
5. Drums, bases, and related materials shall exhibit good workmanship and shall be free from objectionable marks or defects that would adversely affect their appearance or serviceability.
6. The Contractor shall have a maximum of 24 hours to replace any plastic drums identified for replacement by the Engineer/Inspector. The replacement device must be an approved device.

GENERAL DESIGN REQUIREMENTS

Pre-qualified plastic drums shall meet the following requirements:

1. Plastic drums shall be a two-piece design; the "body" of the drum shall be the top portion and the "base" shall be the bottom.
2. The body and base shall lock together in such a manner that the body separates from the base when impacted by a vehicle traveling at a speed of 20 MPH or greater but prevents accidental separation due to normal handling and/or air turbulence created by passing vehicles.
3. Plastic drums shall be constructed of lightweight flexible, and deformable materials. The Contractor shall NOT use metal drums or single piece plastic drums as channelization devices or sign supports.
4. Drums shall present a profile that is a minimum of 18 inches in width at the 36 inch height when viewed from any direction. The height of drum unit (body installed on base) shall be a minimum of 36 inches and a maximum of 42 inches.
5. The top of the drum shall have a built-in handle for easy pickup and shall be designed to drain water and not collect debris. The handle shall have a minimum of two widely spaced 9/16 inch diameter holes to allow attachment of a warning light, warning reflector unit or approved compliant sign.
6. The exterior of the drum body shall have a minimum of four alternating orange and white retroreflective circumferential stripes not less than 4 inches nor greater than 8 inches in width. Any non-reflectorized space between any two adjacent stripes shall not exceed 2 inches in width.
7. Bases shall have a maximum width of 36 inches, a maximum height of 4 inches, and a minimum of two footholds of sufficient size to allow base to be held down while separating the drum body from the base.
8. Plastic drums shall be constructed of ultra-violet stabilized, orange, high-density polyethylene (HDPE) or other approved material.
9. Drum body shall have a maximum unballasted weight of 11 lbs.
10. Drum and base shall be marked with manufacturer's name and model number.

RETROREFLECTIVE SHEETING

1. The stripes used on drums shall be constructed of sheeting meeting the color and retroreflectivity requirements of Departmental Materials Specification DMS-8300, "Sign Face Materials." Type A reflective sheeting shall be supplied unless otherwise specified in the plans.
2. The sheeting shall be suitable for use on and shall adhere to the drum surface such that, upon vehicular impact, the sheeting shall remain adhered in-place and exhibit no delaminating, cracking, or loss of retroreflectivity other than that loss due to abrasion of the sheeting surface.

BALLAST

1. Unballasted bases shall be large enough to hold up to 50 lbs. of sand. This base, when filled with the ballast material, should weigh between 35 lbs (minimum) and 50 lbs (maximum). The ballast may be sand in one to three sandbags separate from the base, sand in a sand-filled plastic base, or other ballasting devices as approved by the Engineer. Stacking of sandbags will be allowed, however height of sandbags above pavement surface may not exceed 12 inches.
2. Bases with built-in ballast shall weigh between 40 lbs. and 50 lbs. Built-in ballast can be constructed of an integral crumb rubber base or a solid rubber base.
3. Recycled truck tire sidewalls may be used for ballast on drums approved for this type of ballast on the CWZTCD list.
4. The ballast shall not be heavy objects, water, or any material that would become hazardous to motorists, pedestrians, or workers when the drum is struck by a vehicle.
5. When used in regions susceptible to freezing, drums shall have drainage holes in the bottoms so that water will not collect and freeze becoming a hazard when struck by a vehicle.
6. Ballast shall not be placed on top of drums.
7. Adhesives may be used to secure base of drums to pavement.

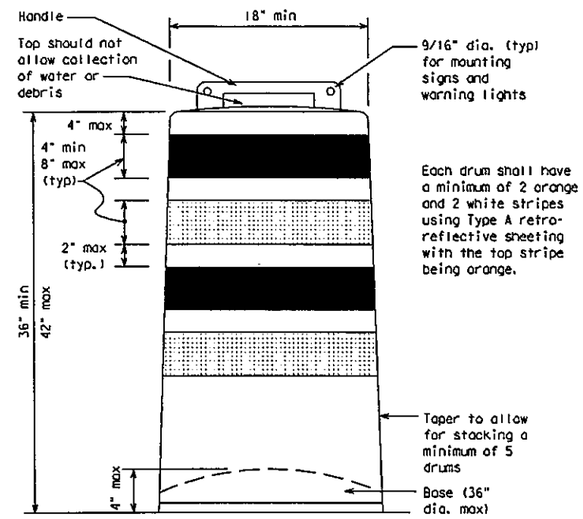

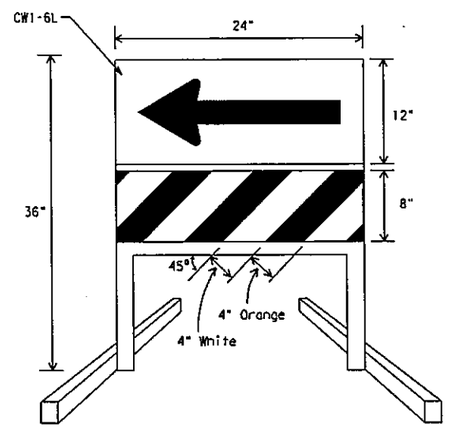

DIRECTION INDICATOR BARRICADE

1. The Direction Indicator Barricade may be used in tapers, transitions, and other areas where specific directional guidance to drivers is necessary.
2. If used, the Direction Indicator Barricade should be used in series to direct the driver through the transition and into the intended travel lane.
3. The Direction Indicator Barricade shall consist of One-Direction Large Arrow (CW1-6) sign in the size shown with a black arrow on a background of Type B_{FL} or Type C_{FL} Orange retroreflective sheeting above a rail with Type A retroreflective sheeting in alternating 4" white and orange stripes sloping downward at an angle of 45 degrees in the direction road users are to pass. Sheeting types shall be as per DMS 8300.
4. Double arrows on the Direction Indicator Barricade will not be allowed.
5. Approved manufacturers are shown on the CWZTCD List. Ballast shall be as approved by the manufacturers instructions.

This detail is not intended for fabrication. See note 3 and the CWZTCD list for providers of approved Detectable Pedestrian Barricades

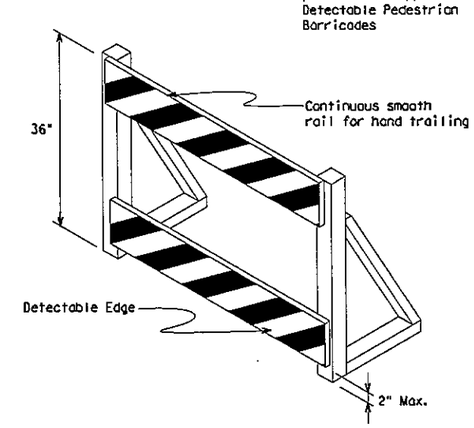

DETECTABLE PEDESTRIAN BARRICADES

1. When existing pedestrian facilities are disrupted, closed, or relocated in a TTC zone, the temporary facilities shall be detectable and include accessibility features consistent with the features present in the existing pedestrian facility.
2. Where pedestrians with visual disabilities normally use the closed sidewalk, a device that is detectable by a person with a visual disability traveling with the aid of a long cane shall be placed across the full width of the closed sidewalk.
3. Detectable pedestrian barricades similar to the one pictured above, longitudinal channelizing devices, some concrete barriers, and wood or chain link fencing with a continuous detectable edging can satisfactorily delineate a pedestrian path.
4. Tape, rope, or plastic chain strung between devices are not detectable, do not comply with the design standards in the "Americans with Disabilities Act Accessibility Guidelines for Buildings and Facilities (ADAAG)" and should not be used as a control for pedestrian movements.
5. Warning lights shall not be attached to detectable pedestrian barricades.
6. Detectable pedestrian barricades may use 8" nominal barricade rails as shown on BC(10) provided that the top rail provides a smooth continuous rail suitable for hand trailing with no splinters, burrs, or sharp edges.

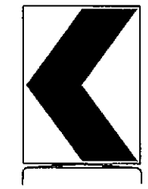

18" x 24" Sign (Maximum Sign Dimension) Chevron CW1-8, Opposing Traffic Lane Divider, Driveway sign D70a, Keep Right R4 series or other signs as approved by Engineer

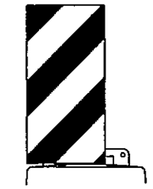

12" x 24" Vertical Panel mount with diagonals sloping down towards travel way

Plywood, Aluminum or Metal sign substrates shall NOT be used on plastic drums

SIGNS, CHEVRONS, AND VERTICAL PANELS MOUNTED ON PLASTIC DRUMS

1. Signs used on plastic drums shall be manufactured using substrates listed on the CWZTCD.
2. Chevrons and other work zone signs with an orange background shall be manufactured with Type B_{FL} or Type C_{FL} Orange sheeting meeting the color and retroreflectivity requirements of DMS-8300, "Sign Face Material," unless otherwise specified in the plans.
3. Vertical Panels shall be manufactured with orange and white sheeting meeting the requirements of DMS-8300 Type A Diagonal stripes on Vertical Panels shall slope down toward the intended traveled lane.
4. Other sign messages (text or symbolic) may be used as approved by the Engineer. Sign dimensions shall not exceed 18 inches in width or 24 inches in height, except for the R9 series signs discussed in note 8 below.
5. Signs shall be installed using a 1/2 inch bolt (nominal) and nut, two washers, and one locking washer for each connection.
6. Mounting bolts and nuts shall be fully engaged and adequately torqued. Bolts should not extend more than 1/2 inch beyond nuts.
7. Chevrons may be placed on drums on the outside of curves, on merging tapers or on shifting tapers. When used in these locations they may be placed on every drum or spaced not more than on every third drum. A minimum of three (3) should be used at each location called for in the plans.
8. R9-9, R9-10, R9-11 and R9-11a Sidewalk Closed signs which are 24 inches wide may be mounted on plastic drums, with approval of the Engineer.

SHEET 8 OF 12

Texas Department of Transportation — Traffic Operations Division Standard

BARRICADE AND CONSTRUCTION CHANNELIZING DEVICES

BC(8)-13

FILE: bc-13.dgn	DN: TxDOT	CK: TxDOT	DW: TxDOT	CK: TxDOT
© TxDOT November 2002	CONT	SECT	JOB	HIGHWAY
REVISIONS				
4-03 7-13	DIST		COUNTY	SHEET NO.
9-07				

102

CITY OF TEXARKANA, TEXAS
220 Texas Blvd., Texarkana, Texas 75501 903-798-3946

REVISION | DATE

PROJECT: STEP
DATE: Apr. 22, 2014
DESIGNED BY: MJD
DRAWN BY: MJD
CHECKED BY: BKD
APPROVED BY: BKD

TRAFFIC CONTROL DETAILS

STEP PROJECT
Dept. of Engineering & Infrastructure
City of Texarkana, Texas

DRAWING

DATE:
FILE:

Disclaimer:
The use of this standard is governed by the "Texas Engineering Practice Act". No warranty of any kind is made by TxDOT for any purpose whatsoever. TxDOT assumes no responsibility for the conversion of this standard to other formats or for incorrect results or damages resulting from its use.

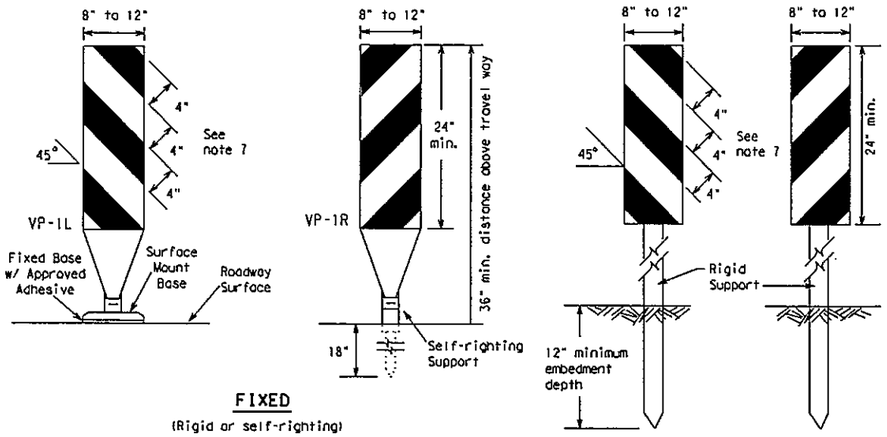

FIXED

(Rigid or self-righting)

DRIVEABLE

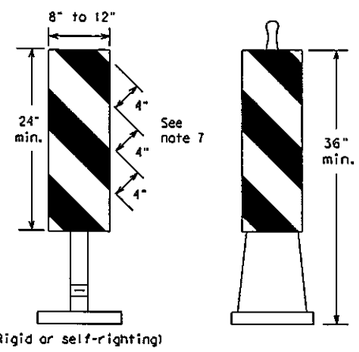

(Rigid or self-righting)

PORTABLE

1. Vertical Panels (VP's) are normally used to channelize traffic or divide opposing lanes of traffic.
2. VP's may be used in daytime or nighttime situations. They may be used at the edge of shoulder drop-offs and other areas such as lane transitions where positive daytime and nighttime delineation is required. The Engineer/Inspector shall refer to the Roadway Design Manual Appendix B "Treatment of Pavement Drop-offs in Work Zones" for additional guidelines on the use of VP's for drop-offs.
3. VP's should be mounted back to back if used at the edge of cuts adjacent to two-way two lane roadways. Stripes are to be reflective orange and reflective white and should always slope downward toward the travel lane.
4. VP's used on expressways and freeways or other high speed roadways, may have more than 270 square inches of retroreflective area facing traffic.
5. Self-righting supports are available with portable base. See "Compliant Work Zone Traffic Control Devices List" (CWZTCD).
6. Sheeting for the VP's shall be retroreflective Type A conforming to Departmental Material Specification DMS-8300, unless noted otherwise.
7. Where the height of reflective material on the vertical panel is 36 inches or greater, a panel stripe of 6 inches shall be used.

VERTICAL PANELS (VPs)

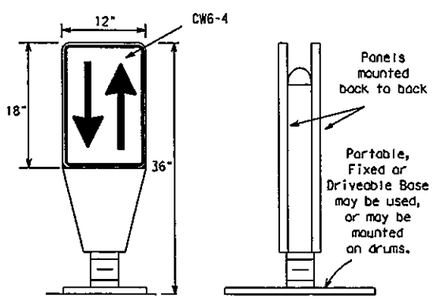

1. Opposing Traffic Lane Dividers (OTLD) are delineation devices designed to convert a normal one-way roadway section to two-way operation. OTLD's are used on temporary centerlines. The upward and downward arrows on the sign's face indicate the direction of traffic on either side of the divider. The base is secured to the pavement with an adhesive or rubber weight to minimize movement caused by a vehicle impact or wind gust.
2. The OTLD may be used in combination with 42" cones or VPs.
3. Spacing between the OTLD shall not exceed 500 feet. 42" cones or VPs placed between the OTLD's should not exceed 100 foot spacing.
4. The OTLD shall be orange with a black non-reflective legend. Sheeting for the OTLD shall be retroreflective Type B_{FL} or Type C_{FL} conforming to Departmental Material Specification DMS-8300, unless noted otherwise. The legend shall meet the requirements of DMS-8300.

OPPOSING TRAFFIC LANE DIVIDERS (OTLD)

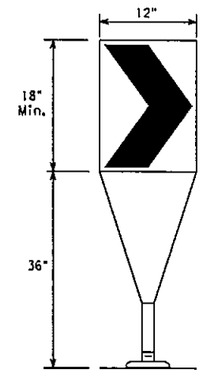

Fixed Base w/ Approved Adhesive (Driveable Base, or Flexible Support can be used)

1. The chevron shall be a vertical rectangle with a minimum size of 12 by 18 inches.
2. Chevrons are intended to give notice of a sharp change of alignment with the direction of travel and provide additional emphasis and guidance for vehicle operators with regard to changes in horizontal alignment of the roadway.
3. Chevrons, when used, shall be erected on the outside of a sharp curve or turn, or on the far side of an intersection. They shall be in line with and at right angles to approaching traffic. Spacing should be such that the motorist always has three in view, until the change in alignment eliminates its need.
4. To be effective, the chevron should be visible for at least 500 feet.
5. Chevrons shall be orange with a black nonreflective legend. Sheeting for the chevron shall be retroreflective Type B_{FL} or Type C_{FL} conforming to Departmental Material Specification DMS-8300, unless noted otherwise. The legend shall meet the requirements of DMS-8300.
6. For Long Term Stationary use on tapers or transitions on freeways and divided highways self-righting chevrons may be used to supplement plastic drums but not to replace plastic drums.

CHEVRONS

GENERAL NOTES

1. Work Zone channelizing devices illustrated on this sheet may be installed in close proximity to traffic and are suitable for use on high or low speed roadways. The Engineer/Inspector shall ensure that spacing and placement is uniform and in accordance with the "Texas Manual on Uniform Traffic Control Devices" (TMUTCD).
2. Channelizing devices shown on this sheet may have a driveable, fixed or portable base. The requirement for self-righting channelizing devices must be specified in the General Notes or other plan sheets.
3. Channelizing devices on self-righting supports should be used in work zone areas where channelizing devices are frequently impacted by errant vehicles or vehicle related wind gusts making alignment of the channelizing devices difficult to maintain. Locations of these devices shall be detailed elsewhere in the plans. These devices shall conform to the TMUTCD and the "Compliant Work Zone Traffic Control Devices List" (CWZTCD).
4. The Contractor shall maintain devices in a clean condition and replace damaged, nonreflective, faded, or broken devices and bases as required by the Engineer/Inspector. The Contractor shall be required to maintain proper device spacing and alignment.
5. Portable bases shall be fabricated from virgin and/or recycled rubber. The portable bases shall weigh a minimum of 30 lbs.
6. Pavement surfaces shall be prepared in a manner that ensures proper bonding between the adhesives, the fixed mount bases and the pavement surface. Adhesives shall be prepared and applied according to the manufacturer's recommendations.
7. The installation and removal of channelizing devices shall not cause detrimental effects to the final pavement surfaces, including pavement surface discoloration or surface integrity. Driveable bases shall not be permitted on final pavement surfaces. The Engineer/Inspector shall approve all application and removal procedures of fixed bases.

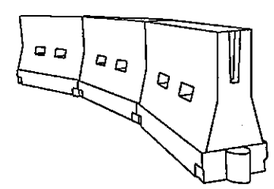

LONGITUDINAL CHANNELIZING DEVICES (LCD)

1. LCDs are crashworthy, lightweight, deformable devices that are highly visible, have good target value and can be connected together. They are not designed to contain or redirect a vehicle on impact.
2. LCDs may be used instead of a line of cones or drums.
3. LCDs shall be placed in accordance to application and installation requirements specific to the device, and used only when shown on the CWZTCD list.
4. LCDs should not be used to provide positive protection for obstacles, pedestrians or workers.
5. LCDs shall be supplemented with retroreflective delineation as required for temporary barriers on BC(7) when placed roughly parallel to the travel lanes.
6. LCDs used as barricades placed perpendicular to traffic should have at least one row of reflective sheeting meeting the requirements for barricade rails as shown on BC(10) placed near the top of the LCD along the full length of the device.

WATER BALLASTED SYSTEMS USED AS BARRIERS

1. Water ballasted systems used as barriers shall not be used solely to channelize road users, but also to protect the work space per the appropriate NCHRP 350 crashworthiness requirements based on roadway speed and barrier application.
2. Water ballasted systems used to channelize vehicular traffic shall be supplemented with retroreflective delineation or channelizing devices to improve daytime/nighttime visibility. They may also be supplemented with pavement markings.
3. Water ballasted systems used as barriers shall be placed in accordance to application and installation requirements specific to the device, and used only when shown on the CWZTCD list.
4. Water ballasted systems used as barriers should not be used for a merging taper except in low speed (less than 45 MPH) urban areas. When used on a taper in a low speed urban area, the taper shall be delineated and the taper length should be designed to optimize road user operations considering the available geometric conditions.
5. When water ballasted systems used as barriers have blunt ends exposed to traffic, they should be attenuated as per manufacturer recommendations or flared to a point outside the clear zone.

If used to channelize pedestrians, longitudinal channelizing devices or water ballasted systems must have a continuous detectable bottom for users of long canes and the top of the unit shall not be less than 32 inches in height.

HOLLOW OR WATER BALLASTED SYSTEMS USED AS LONGITUDINAL CHANNELIZING DEVICES OR BARRIERS

Posted Speed *	Formula	Minimum Desirable Taper Lengths ** 10' Offset	11' Offset	12' Offset	Suggested Maximum Spacing of Channelizing Devices On a Taper	On a Tangent
30	$L = \frac{WS^2}{60}$	150'	165'	180'	30'	60'
35		205'	225'	245'	35'	70'
40		265'	295'	320'	40'	80'
45	L = WS	450'	495'	540'	45'	90'
50		500'	550'	600'	50'	100'
55		550'	605'	660'	55'	110'
60		600'	660'	720'	60'	120'
65		650'	715'	780'	65'	130'
70		700'	770'	840'	70'	140'
75		750'	825'	900'	75'	150'
80		800'	880'	960'	80'	160'

** Taper lengths have been rounded off.
L=Length of Taper (FT.) W=Width of Offset (FT.)
S=Posted Speed (MPH)

SUGGESTED MAXIMUM SPACING OF CHANNELIZING DEVICES AND MINIMUM DESIRABLE TAPER LENGTHS

SHEET 9 OF 12

Texas Department of Transportation — Traffic Operations Division Standard

BARRICADE AND CONSTRUCTION CHANNELIZING DEVICES

BC(9)-13

FILE: bc-13.dgn	DN: TxDOT	CK: TxDOT	DW: TxDOT	CK: TxDOT
© TxDOT November 2002	CONT	SECT	JOB	HIGHWAY
REVISIONS 9-07 7-13	DIST		COUNTY	SHEET NO.

103

9.e

REVISION | DATE

CITY OF TEXARKANA, TEXAS
220 Texas Blvd., Texarkana, Texas 75501 903-798-3948

PROJECT: STEP
DATE: Apr 22, 2014
DESIGNED BY: MLD
DRAWN BY: MLD
CHECKED BY: BKD

TRAFFIC CONTROL DETAILS

STEP PROJECT
Dept. of Engineering & Infrastructure
City of Texarkana, Texas

DRAWING

Attachment: Exhibit 'B-3' STEP II Sheet 48-67 (1124 : Res No. 2014 - 067 R STEP Project II Downtown Sidewalk Enhancements DPW 14 - 02)

DATE:
FILE:

TYPE 3 BARRICADES

1. Refer to the Compliant Work Zone Traffic Control Devices List (CWZTCD) for details of the Type 3 Barricades and a list of all materials used in the construction of Type 3 Barricades.
2. Type 3 Barricades shall be used at each end of construction projects closed to all traffic.
3. Barricades extending across a roadway should have stripes that slope downward in the direction toward which traffic must turn in detouring. When both right and left turns are provided, the chevron striping may slope downward in both directions from the center of the barricade. Where no turns are provided at a closed road striping should slope downward in both directions toward the center of roadway.
4. Striping of rails, for the right side of the roadway, should slope downward to the left. For the left side of the roadway, striping should slope downward to the right.
5. Identification markings may be shown only on the back of the barricade rails. The maximum height of letters and/or company logos used for identification shall be 1".
6. Barricades shall not be placed parallel to traffic unless an adequate clear zone is provided.
7. Warning lights shall NOT be installed on barricades.
8. Where barricades require the use of weights to keep from turning over, the use of sandbags with dry, cohesionless sand is recommended. The sandbags will be tied shut to keep the sand from spilling and to maintain a constant weight. Sand bags shall not be stacked in a manner that covers any portion of a barricade rails reflective sheeting. Rock, concrete, iron, steel or other solid objects will NOT be permitted. Sandbags should weigh a minimum of 35 lbs and a maximum of 50 lbs. Sandbags shall be made of a durable material that tears upon vehicular impact. Rubber (such as tire inner tubes) shall not be used for sandbags. Sandbags shall only be placed along or upon the base supports of the device and shall not be suspended above ground level or hung with rope, wire, chains or other fasteners.
9. Sheeting for barricades shall be retroreflective Type A conforming to Departmental Material Specification DMS-8300 unless otherwise noted.

Barricades shall NOT be used as a sign support.

TYPICAL STRIPING DETAIL FOR BARRICADE RAIL

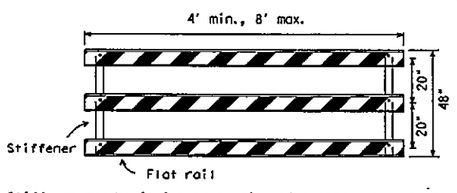

Stiffener may be inside or outside of support, but no more than 2 stiffeners shall be allowed on one barricade.

TYPICAL PANEL DETAIL FOR SKID OR POST TYPE BARRICADES

Each roadway of a divided highway shall be barricaded in the same manner.

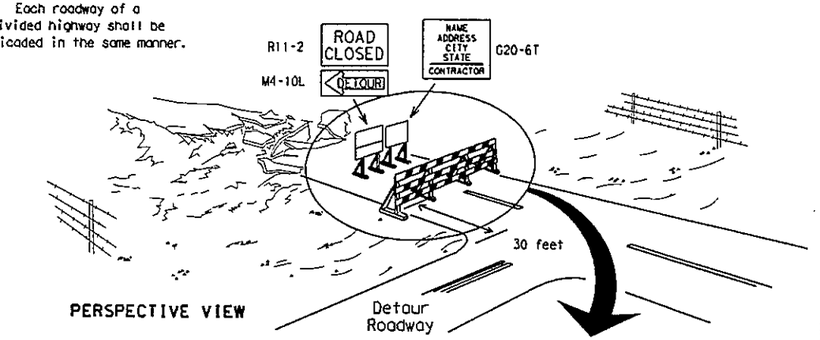

PERSPECTIVE VIEW

The three rails on Type 3 barricades shall be reflectorized orange and reflective white stripes on one side facing one-way traffic and both sides for two-way traffic.
Barricade striping should slant downward in the direction of detour.

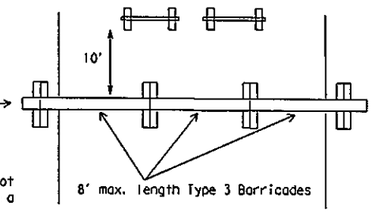

PLAN VIEW

1. Signs should be mounted on independent supports at a 7 foot mounting height in center of roadway. The signs should be a minimum of 10 feet behind Type 3 Barricades.
2. Advance signing shall be as specified elsewhere in the plans.

TYPE 3 BARRICADE (POST AND SKID) TYPICAL APPLICATION

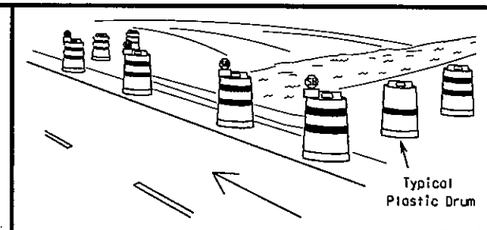

PERSPECTIVE VIEW

1. Where positive redirectional capability is provided, drums may be omitted.
2. Plastic construction fencing may be used with drums for safety as required in the plans.
3. Vertical Panels on flexible support may be substituted for drums when the shoulder width is less than 4 feet.
4. When the shoulder width is greater than 12 feet, steady-burn lights may be omitted if drums are used.
5. Drums must extend the length of the culvert widening.

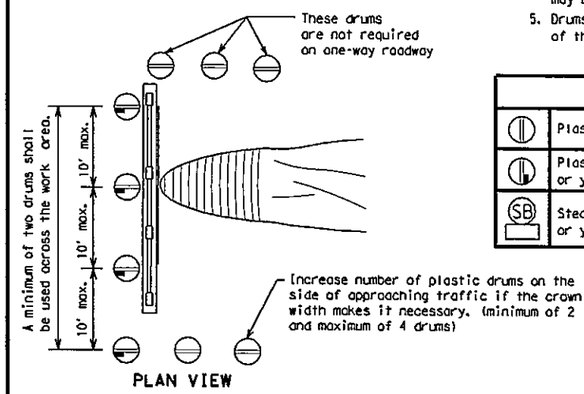

PLAN VIEW

LEGEND	
	Plastic drum
	Plastic drum with steady burn light or yellow warning reflector
SB	Steady burn warning light or yellow warning reflector

CULVERT WIDENING OR OTHER ISOLATED WORK WITHIN THE PROJECT LIMITS

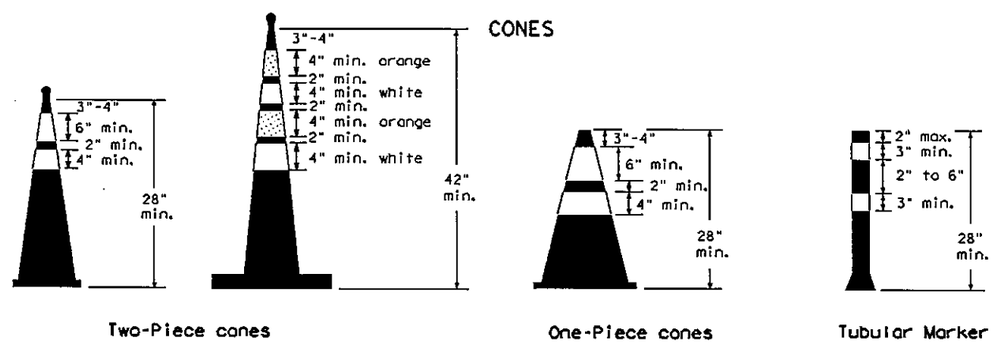

Two-Piece cones | One-Piece cones | Tubular Marker

28" Cones shall have a minimum weight of 9 1/2 lbs.

42" 2-piece cones shall have a minimum weight of 30 lbs. including base.

1. Traffic cones and tubular markers shall be predominantly orange, and meet the height and weight requirements shown above.
2. One-piece cones have the body and base of the cone molded in one consolidated unit. Two-piece cones have a cone shaped body and a separate rubber base, or ballast, that is added to keep the device upright and in place.
3. Two-piece cones may have a handle or loop extending up to 8" above the minimum height shown, in order to aid in retrieving the device.
4. Cones or tubular markers used at night shall have white or white and orange reflective bands as shown above. The reflective bands shall have a smooth, sealed outer surface and meet the requirements of Departmental Material Specification DMS-8300 Type A.
5. 28" cones and tubular markers are generally suitable for short duration and short-term stationary work as defined on BC(4). These should not be used for intermediate-term or long-term stationary work unless personnel is on-site to maintain them in their proper upright position.
6. 42" two-piece cones, vertical panels or drums are suitable for all work zone durations.
7. Cones or tubular markers used on each project should be of the same size and shape.

THIS DEVICE SHALL NOT BE USED ON PROJECTS LET AFTER MARCH 2014.

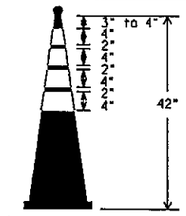

EDGELINE CHANNELIZER

1. This device is intended only for use in place of a vertical panel to channelize traffic by indicating the edge of the travel lane. It is not intended to be used in transitions or tapers.
2. This device shall not be used to separate lanes of traffic (opposing or otherwise) or warn of objects.
3. This device is based on a 42 inch, two-piece cone with an alternate striping pattern: four 4 inch retroreflective bands, with an approximate 2 inch gap between bands. The color of the band should correspond to the color of the edgeline (yellow for left edgeline, white for right edgeline) for which the device is substituted or for which it supplements. The reflectorized bands shall be retroreflective Type A conforming to Departmental Material Specification DMS-8300, unless otherwise noted.
4. The base must weigh a minimum of 30 lbs.

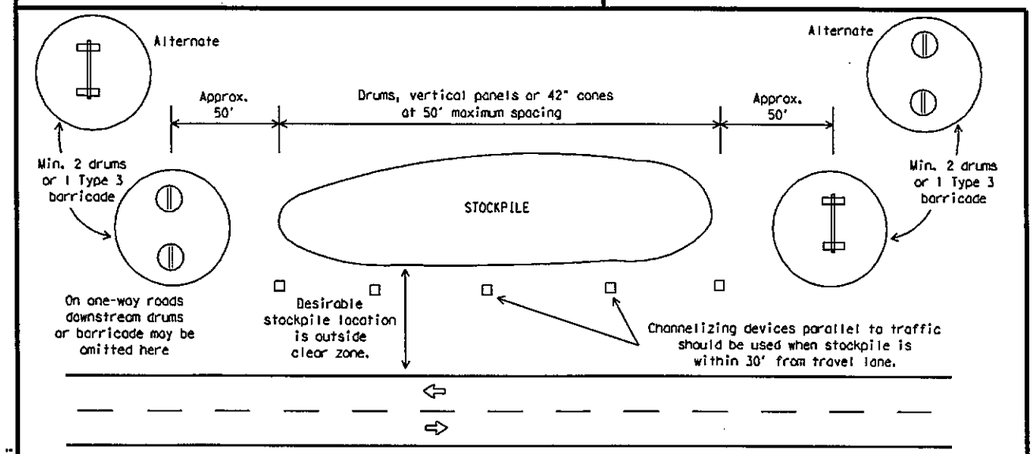

TRAFFIC CONTROL FOR MATERIAL STOCKPILES

SHEET 10 OF 12

Texas Department of Transportation — Traffic Operations Division Standard

BARRICADE AND CONSTRUCTION CHANNELIZING DEVICES

BC(10)-13

FILE: bc-13.dgn	DN: TxDOT	CK: TxDOT	DW: TxDOT	CK: TxDOT
© TxDOT November 2002	CONT	SECT	JOB	HIGHWAY
REVISIONS 9-07 7-13	DIST		COUNTY	SHEET NO.

104

CITY OF TEXARKANA, TEXAS
820 Texas Blvd., Texarkana, Texas 75501 903-798-3948

REVISION | DATE

PROJECT: STEP
DATE: Apr 22, 2014
DESIGNED BY: MLD
DRAWN BY: MLD
CHECKED BY: BKD
APPROVED BY: BKD

TRAFFIC CONTROL DETAILS

STEP PROJECT
Dept. of Engineering & Infrastructure
City of Texarkana, Texas

DRAWING

DATE:
FILE:

Attachment: Exhibit 'B-3' STEP II Sheet 48-67 (1124 : Res No. 2014 - 067 R STEP Project II Downtown Sidewalk Enhancements DPW 14 - 02)

The use of this standard is governed by the "Texas Engineering Practice Act". No warranty of any kind is made by TxDOT for any purpose whatsoever. TxDOT assumes no responsibility for the conversion of this standard to other formats or for incorrect results or damages resulting from its use.

WORK ZONE PAVEMENT MARKINGS

GENERAL

1. The Contractor shall be responsible for maintaining work zone and existing pavement markings, in accordance with the standard specifications and special provisions, on all roadways open to traffic within the CSJ limits unless otherwise stated in the plans.
2. Color, patterns and dimensions shall be in conformance with the "Texas Manual on Uniform Traffic Control Devices" (TMUTCD).
3. Additional supplemental pavement marking details may be found in the plans or specifications.
4. Pavement markings shall be installed in accordance with the TMUTCD and as shown on the plans.
5. When short term markings are required on the plans, short term markings shall conform with the TMUTCD, the plans and details as shown on the Standard Plan Sheet WZ(STPM).
6. When standard pavement markings are not in place and the roadway is opened to traffic, DO NOT PASS signs shall be erected to mark the beginning of the sections where passing is prohibited and PASS WITH CARE signs at the beginning of sections where passing is permitted.
7. All work zone pavement markings shall be installed in accordance with Item 662, "Work Zone Pavement Markings."

RAISED PAVEMENT MARKERS

1. Raised pavement markers are to be placed according to the patterns on BC(12).
2. All raised pavement markers used for work zone markings shall meet the requirements of Item 672, "RAISED PAVEMENT MARKERS" and Departmental Material Specification DMS-4200 or DMS-4300.

PREFABRICATED PAVEMENT MARKINGS

1. Removable prefabricated pavement markings shall meet the requirements of DMS-8241.
2. Non-removable prefabricated pavement markings (fall back) shall meet the requirements of DMS-8240.

MAINTAINING WORK ZONE PAVEMENT MARKINGS

1. The Contractor will be responsible for maintaining work zone pavement markings within the work limits.
2. Work zone pavement markings shall be inspected in accordance with the frequency and reporting requirements of work zone traffic control device inspections as required by Form 599.
3. The markings should provide a visible reference for a minimum distance of 300 feet during normal daylight hours and 160 feet when illuminated by automobile low-beam headlights at night, unless sight distance is restricted by roadway geometrics.
4. Markings failing to meet this criteria within the first 30 days after placement shall be replaced at the expense of the Contractor as per Specification Item 662.

REMOVAL OF PAVEMENT MARKINGS

1. Pavement markings that are no longer applicable, could create confusion or direct a motorist toward or into the closed portion of the roadway shall be removed or obliterated before the roadway is opened to traffic.
2. The above shall not apply to detours in place for less than three days, where flaggers and/or sufficient channelizing devices are used in lieu of markings to outline the detour route.
3. Pavement markings shall be removed to the fullest extent possible, so as not to leave a discernable marking. This shall be by any method approved by TxDOT Specification Item 677 for "Eliminating Existing Pavement Markings and Markers".
4. The removal of pavement markings may require resurfacing or seal coating portions of the roadway as described in Item 677.
5. Subject to the approval of the Engineer, any method that proves to be successful on a particular type pavement may be used.
6. Blast cleaning may be used but will not be required unless specifically shown in the plans.
7. Over-painting of the markings SHALL NOT BE permitted.
8. Removal of raised pavement markers shall be as directed by the Engineer.
9. Removal of existing pavement markings and markers will be paid for directly in accordance with Item 677, "ELIMINATING EXISTING PAVEMENT MARKINGS AND MARKERS," unless otherwise stated in the plans.
10. Black-out marking tape may be used to cover conflicting existing markings for periods less than two weeks when approved by the Engineer.

Temporary Flexible-Reflective Roadway Marker Tabs

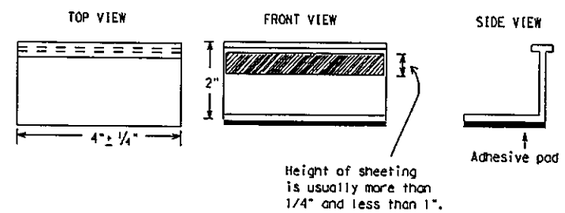

STAPLES OR NAILS SHALL NOT BE USED TO SECURE TEMPORARY FLEXIBLE-REFLECTIVE ROADWAY MARKER TABS TO THE PAVEMENT SURFACE

1. Temporary flexible-reflective roadway marker tabs used as guidemarks shall meet the requirements of DMS-8242.
2. Tabs detailed on this sheet are to be inspected and accepted by the Engineer or designated representative. Sampling and testing is not normally required, however at the option of the Engineer, either "A" or "B" below may be imposed to assure quality before placement on the roadway.
   - A. Select five (5) or more tabs at random from each lot or shipment and submit to the Construction Division, Materials and Pavement Section to determine specification compliance.
   - B. Select five (5) tabs and perform the following test. Affix five (5) tabs at 24 inch intervals on an asphaltic pavement in a straight line. Using a medium size passenger vehicle or pickup, run over the markers with the front and rear tires at a speed of 35 to 40 miles per hour, four (4) times in each direction. No more than one (1) out of the five (5) reflective surfaces shall be lost or displaced as a result of this test.
3. Small design variances may be noted between tab manufacturers.
4. See Standard Sheet WZ(STPM) for tab placement on new pavements. See Standard Sheet TCP(7-1) for tab placement on seal coat work.

RAISED PAVEMENT MARKERS USED AS GUIDEMARKS

1. Raised pavement markers used as guidemarks shall be from the approved product list, and meet the requirements of DMS-4200.
2. All temporary construction raised pavement markers provided on a project shall be of the same manufacturer.
3. Adhesive for guidemarks shall be bituminous material hot applied or butyl rubber pad for all surfaces, or thermoplastic for concrete surfaces.

Guidemarks shall be designated as:
YELLOW - (two amber reflective surfaces with yellow body).
WHITE - (one silver reflective surface with white body).

DEPARTMENTAL MATERIAL SPECIFICATIONS	
PAVEMENT MARKERS (REFLECTORIZED)	DMS-4200
TRAFFIC BUTTONS	DMS-4300
EPOXY AND ADHESIVES	DMS-6100
BITUMINOUS ADHESIVE FOR PAVEMENT MARKERS	DMS-6130
PERMANENT PREFABRICATED PAVEMENT MARKINGS	DMS-8240
TEMPORARY REMOVABLE, PREFABRICATED PAVEMENT MARKINGS	DMS-8241
TEMPORARY FLEXIBLE, REFLECTIVE ROADWAY MARKER TABS	DMS-8242

A list of prequalified reflective raised pavement markers, non-reflective traffic buttons, roadway marker tabs and other pavement markings can be found at the Material Producer List web address shown on BC(1).

SHEET 11 OF 12

Texas Department of Transportation — Traffic Operations Division Standard

BARRICADE AND CONSTRUCTION PAVEMENT MARKINGS

BC(11)-13

FILE: bc-13.dgn	DN: TxDOT	CK: TxDOT	DW: TxDOT	CK: TxDOT
© TxDOT February 1998	CONT	SECT	JOB	HIGHWAY
REVISIONS 2-98 11-02 7-13 1-02 9-07	DIST		COUNTY	SHEET

DATE:
FILE:

CITY OF TEXARKANA, TEXAS
220 Texas Blvd., Texarkana, Texas 75501 903-798-3948
REVISION | DATE

PROJECT: STEP
DATE: Apr 22, 2014
DESIGNED BY: WJD
DRAWN BY: WJD
CHECKED BY: BKD
APPROVED BY: BKD

TRAFFIC CONTROL DETAILS

STEP PROJECT
Dept. of Engineering & Infrastructure
City of Texarkana, Texas

SHEET 62

Attachment: Exhibit 'B-3' STEP II Sheet 48-67 (1124 : Res No. 2014 - 067 R STEP Project II Downtown Sidewalk Enhancements DPW 14 - 02)

PAVEMENT MARKING PATTERNS

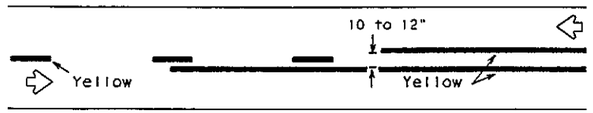

REFLECTORIZED PAVEMENT MARKINGS - PATTERN A

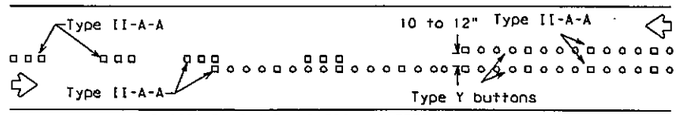

RAISED PAVEMENT MARKERS - PATTERN A

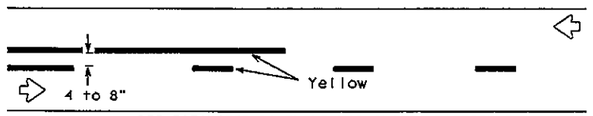

REFLECTORIZED PAVEMENT MARKINGS - PATTERN B

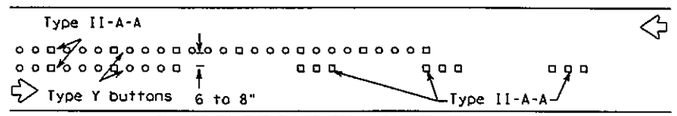

RAISED PAVEMENT MARKERS - PATTERN B

Pattern A is the TXDOT Standard, however Pattern B may be used if approved by the Engineer.
Prefabricated markings may be substituted for reflectorized pavement markings.

CENTER LINE & NO-PASSING ZONE BARRIER LINES FOR TWO-LANE, TWO-WAY HIGHWAYS

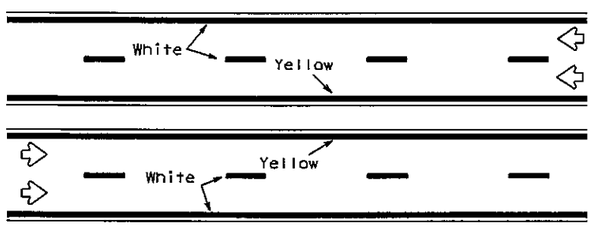

REFLECTORIZED PAVEMENT MARKINGS

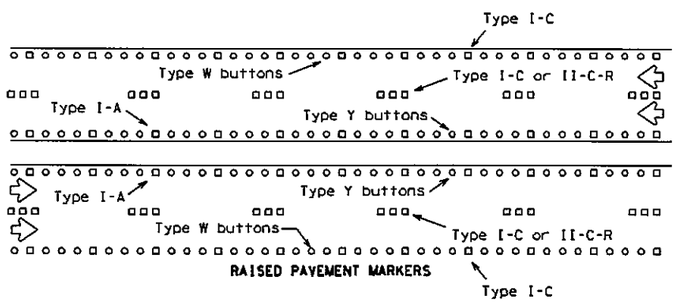

RAISED PAVEMENT MARKERS

Prefabricated markings may be substituted for reflectorized pavement markings.

EDGE & LANE LINES FOR DIVIDED HIGHWAY

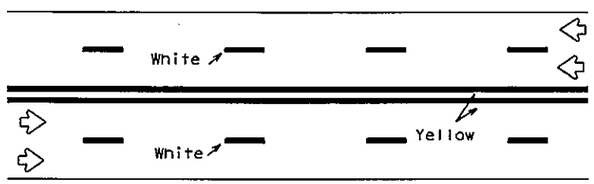

REFLECTORIZED PAVEMENT MARKINGS

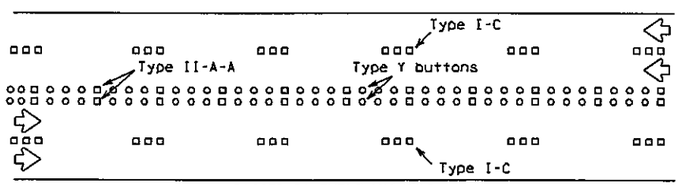

RAISED PAVEMENT MARKERS

Prefabricated markings may be substituted for reflectorized pavement markings.

LANE & CENTER LINES FOR MULTILANE UNDIVIDED HIGHWAYS

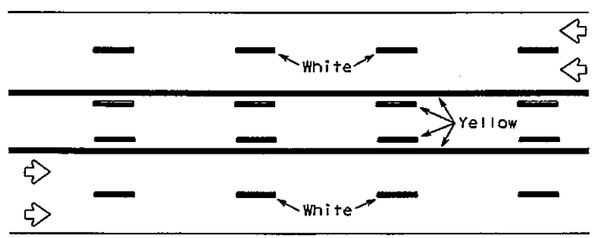

REFLECTORIZED PAVEMENT MARKINGS

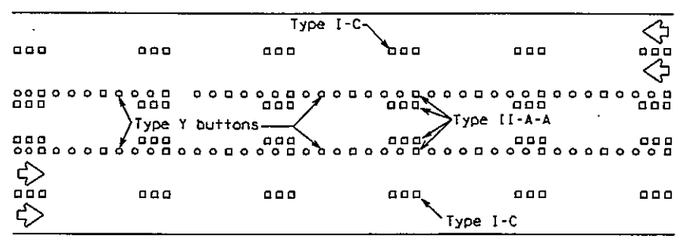

RAISED PAVEMENT MARKERS

Prefabricated markings may be substituted for reflectorized pavement markings.

TWO-WAY LEFT TURN LANE

STANDARD WORK ZONE PAVEMENT MARKINGS DETAILS

SOLID LINES

DOUBLE NO-PASSING LINE

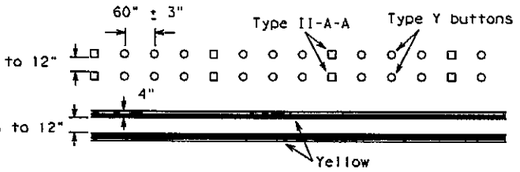

EDGE LINE OR SINGLE NO-PASSING LINE

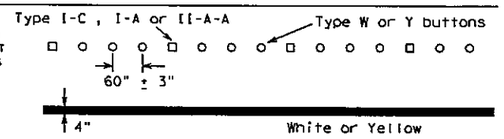

WIDE LINE

(FOR LEFT TURN CHANNELIZING LINE OR CHANNELIZING LINE USED TO DISCOURAGE LANE CHANGING.)

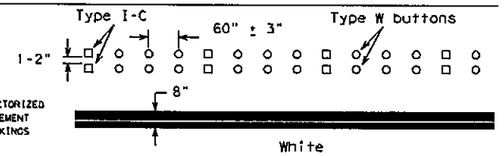

BROKEN LINES

CENTER LINE OR LANE LINE

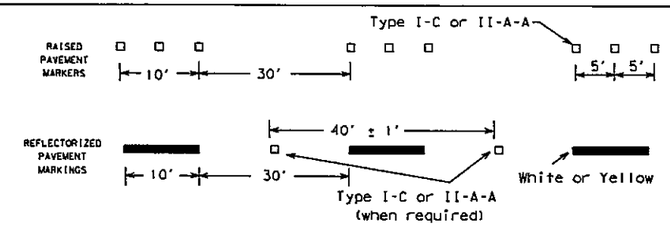

AUXILIARY OR LANEDROP LINE

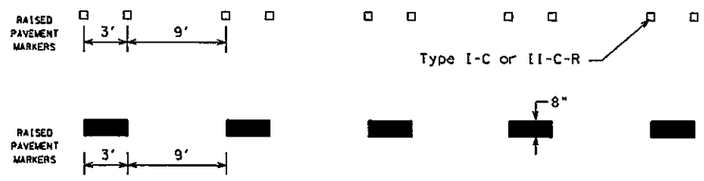

REMOVABLE MARKINGS WITH RAISED PAVEMENT MARKERS

If raised pavement markers are used to supplement REMOVABLE markings, the markers shall be applied to the top of the tape at the approximate mid length of tape used for broken lines or at 20 foot spacing for solid lines. This allows an easier removal of raised pavement markers and tape.

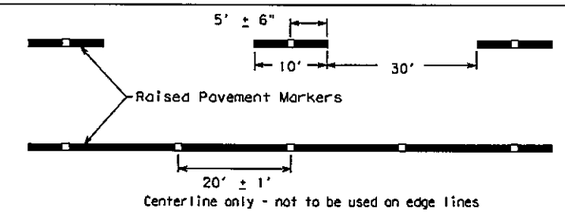

Centerline only - not to be used on edge lines

SHEET 12 OF 12

Raised pavement markers used as standard pavement markings shall be from the approved products list and meet the requirements of Item 672 "RAISED PAVEMENT MARKERS."

Texas Department of Transportation — Traffic Operations Division Standard

BARRICADE AND CONSTRUCTION PAVEMENT MARKING PATTERNS

BC(12)-13

FILE: bc-13.dgn	DN: TxDOT	CK: TxDOT	DW: TxDOT	CK: TxDOT
© TxDOT February 1998	CONT	SECT	JOB	HIGHWAY
REVISIONS				
1-97 11-02 7-13	DIST		COUNTY	SHEET NO.
2-98 9-07				

106

REVISION | DATE

CITY OF TEXARKANA, TEXAS
220 Texas Blvd., Texarkana, Texas 75501 903-798-3946

PROJECT: STEP
DATE: Apr 28, 2014
DESIGNED BY: MLD
DRAWN BY: MLD
CHECKED BY: BKD
APPROVED BY: BKD

TRAFFIC CONTROL DETAILS

STEP PROJECT
Dept. of Engineering & Infrastructure
City of Texarkana, Texas

DRAWING

DATE:
FILE:

Attachment: Exhibit 'B-3' STEP II Sheet 48-67 (1124 : Res No. 2014 - 067 R STEP Project II Downtown Sidewalk Enhancements DPW 14 - 02)

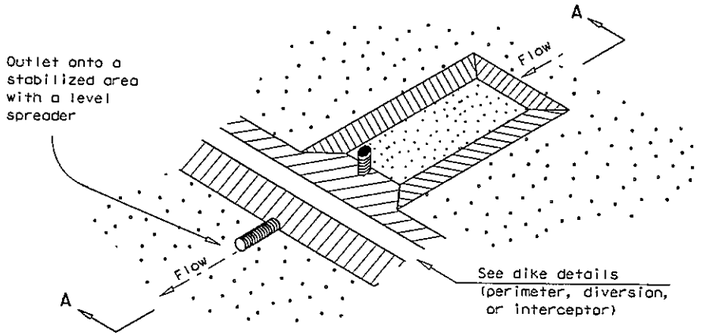

SEDIMENT BASIN AND/OR TRAP WITH PIPE OUTLET

ST/PO

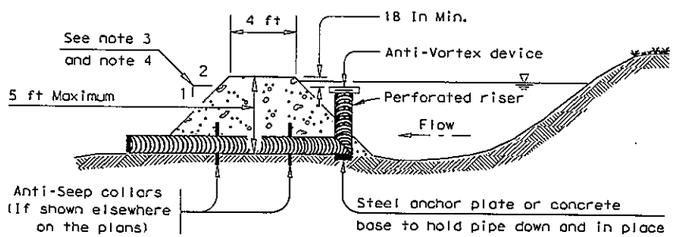

SECTION A-A

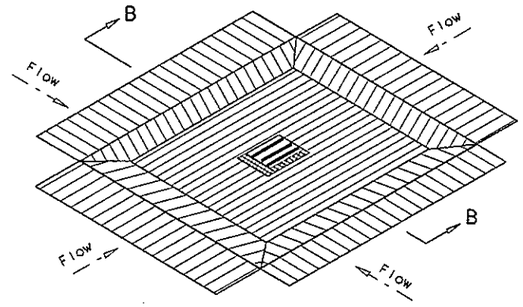

DROP INLET SEDIMENT TRAP

ST-DI

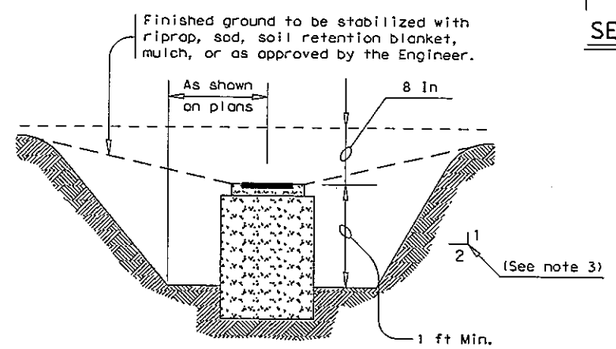

SECTION B-B

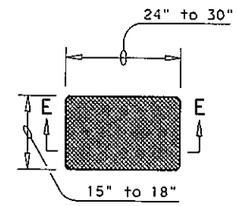

SANDBAG DETAIL

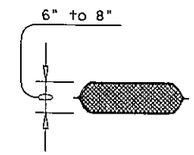

SECTION E-E

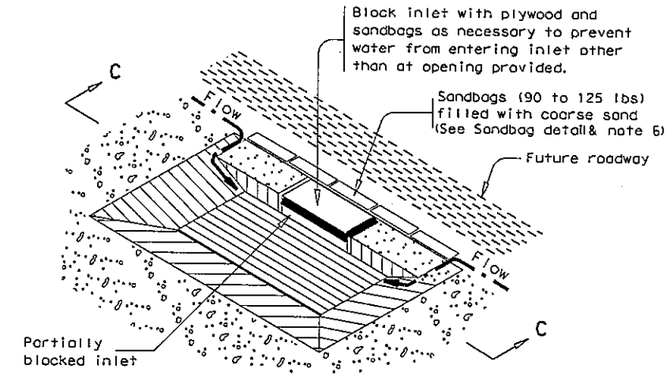

CURB INLET SEDIMENT TRAP

ST-CI

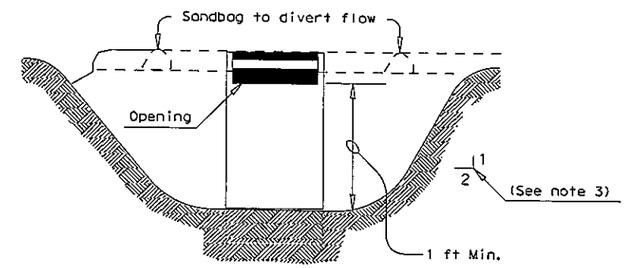

SECTION C-C

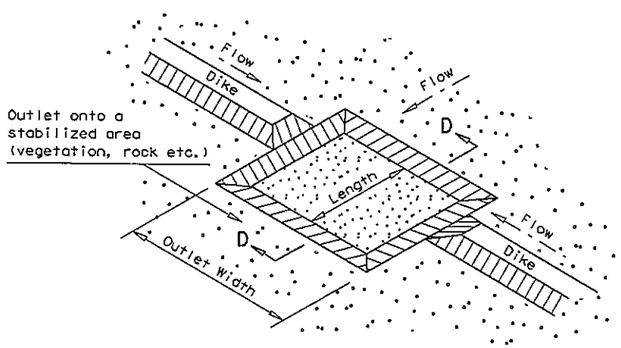

SEDIMENT TRAP WITH LEVEL STABILIZED OUTLET

ST

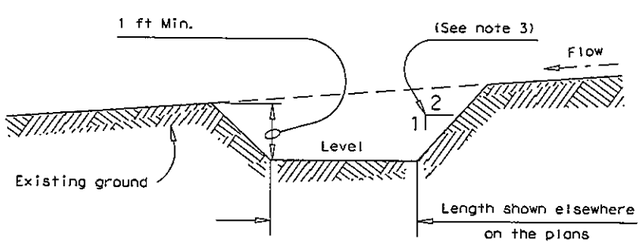

SECTION D-D

PLANS SHEET LEGEND

ST/PO — Sediment Basin and/or Trap with Pipe Outlet

ST-DI — Drop Inlet Sediment Trap

ST-CI — Curb Inlet Sediment Trap

ST — Sediment Trap with Level Stabilized Outlet

SEDIMENT BASIN & TRAP USAGE GUIDELINES

A sediment basin and/or trap may be used to precipitate sediment out of runoff draining from an unstabilized area.

Basins: The drainage area for a sediment basin should not exceed 100 acres. The basin capacity shall be at least 1800 CF/Acre of drainage area (0.5" over the drainage area). If the disturbed area draining to the basin is larger than 10 acres, the basin capacity should be 3600 CF/Acre (1.0" over the drainage area).

The basin should have a 40 hour draw-down time with an emergency spillway. The spillway may be designed to pass the peak rate of runoff from a 25 year frequency storm. The 100 year storm should be investigated to consider possible flooding impacts.

The entrance into the basin should be protected from erosion. The basin should be cleaned when the capacity has been reduced by 1/3.

Traps: The drainage area for a sediment trap should not exceed 5 acres. The trap capacity should be 1800 CF/Acre (0.5" over the drainage area).

Sediment traps should be placed in the following locations:
1. Within drainage ditches spaced @ 500'± on center
2. Immediately preceding ditch inlets
3. Just before the drainage enters a water course
4. Just before the drainage leaves the right of way

The trap outlet may either be through a perforated riser and pipe assembly designed to achieve a 40 hour draw-down time or over a level stabilized area (vegetation, rock, etc.).

The trap should be cleaned when the capacity has been reduced by ½ or the sediment has accumulated to a depth of 1', whichever is less.

GENERAL NOTES

1. Pipe outlet material shall conform to the Item "Pipe Underdrains" or as accepted by the Engineer.
2. All pipe connections shall be watertight.
3. Side slopes within the safety clear zone of a roadway shall be 6:1 or flatter. Protect the traveling public from inlet stacks within the clear zone.
4. Sediment basins shall have side slopes of 3:1 or flatter.
5. The dimensions and limits of excavation for sediment basins and traps will be as shown elsewhere on the plans.
6. The sandbag material shall be made of polypropylene, polyethylene or polyamide woven fabric, min. unit weight 4 ounces/SY, Mullen burst strength exeeding 300 psi and ultraviolet stability exeeding 70%.
7. The guidelines shown hereon are suggestions only and may be modified by the Engineer.

Texas Department of Transportation — Design Division Standard

TEMPORARY EROSION, SEDIMENT AND WATER POLLUTION CONTROL MEASURES

SEDIMENT BASINS AND TRAPS (EARTHWORK FOR EROSION CONTROL)

EC(6)-93

FILE: ec693.dgn	DN: TxDOT	CK: HEJ	DW: BD	CK:
©TxDOT May 1993	CONT	SECT	JOB	HIGHWAY
REVISIONS	DIST		COUNTY	SHEET NO.

DATE:
FILE:

PROJECT: STEP
DATE: Apr 22, 2014
DESIGNED BY: MLD
DRAWN BY: MLD
CHECKED BY: BKD
APPROVED BY: BKD

REVISION | DATE

CITY OF TEXARKANA, TEXAS
220 Texas Blvd., Texarkana, Texas 75501 903-798-3948

EC (6) -93

STEP PROJECT
Dept. of Engineering & Infrastructure
City of Texarkana, Texas

DRAWING

kind is made by TxDOT for any purpose whatsoever. TxDOT assumes no responsibility for the conversion of this standard to other formats or for incorrect results or damages resulting from its use.

The use of this standard is governed by the "Texas Engineering Practice Act". No warranty of any kind is made by TxDOT for any purpose whatsoever. TxDOT assumes no responsibility for the conversion of this standard to other formats or for incorrect results or damages resulting from its use.

I. STORMWATER POLLUTION PREVENTION-CLEAN WATER ACT SECTION 402

TPDES TXR 150000: Stormwater Discharge Permit or Construction General Permit required for projects with 1 or more acres disturbed soil. Projects with any disturbed soil must protect for erosion and sedimentation in accordance with Item 1122.

List MS4 Operator(s) that may receive discharges from this project. They may need to be notified prior to construction activities.

1.

2.

☐ No Action Required ☒ Required Action

Action No.

1. Prevent stormwater pollution by controlling erosion and sedimentation in accordance with TPDES Permit TXR 150000
2. Comply with the SW3P and revise when necessary to control pollution or required by the Engineer.
3. Post Construction Site Notice (CSN) with SW3P information on or near the site, accessible to the public and TCEQ, EPA or other inspectors.
4. When Contractor project specific locations (PSL's) increase disturbed soil area to 5 acres or more, submit NOI to TCEQ and the Engineer.

II. WORK IN OR NEAR STREAMS, WATERBODIES AND WETLANDS CLEAN WATER ACT SECTIONS 401 AND 404

USACE Permit required for filling, dredging, excavating or other work in any water bodies, rivers, creeks, streams, wetlands or wet areas.

The Contractor must adhere to all of the terms and conditions associated with the following permit(s):

☒ No Permit Required

☐ Nationwide Permit 14 - PCN not Required (less than 1/10th acre waters or wetlands affected)

☐ Nationwide Permit 14 - PCN Required (1/10 to <1/2 acre, 1/3 in tidal waters)

☐ Individual 404 Permit Required

☐ Other Nationwide Permit Required: NWP# _____

Required Actions: List waters of the US permit applies to, location in project and check Best Management Practices planned to control erosion, sedimentation and post-project TSS.

1.

2.

3.

4.

The elevation of the ordinary high water marks of any areas requiring work to be performed in the waters of the US requiring the use of a nationwide permit can be found on the Bridge Layouts.

Best Management Practices:

Erosion	Sedimentation	Post-Construction TSS
☐ Temporary Vegetation	☐ Silt Fence	☐ Vegetative Filter Strips
☐ Blankets/Matting	☐ Rock Berm	☐ Retention/Irrigation Systems
☐ Mulch	☐ Triangular Filter Dike	☐ Extended Detention Basin
☐ Sodding	☐ Sand Bag Berm	☐ Constructed Wetlands
☐ Interceptor Swale	☐ Straw Bale Dike	☐ Wet Basin
☐ Diversion Dike	☐ Brush Berms	☐ Erosion Control Compost
☐ Erosion Control Compost	☐ Erosion Control Compost	☐ Mulch Filter Berm and Socks
☐ Mulch Filter Berm and Socks	☐ Mulch Filter Berm and Socks	☐ Compost Filter Berm and Socks
☒ Compost Filter Berm and Socks	☐ Compost Filter Berm and Socks	☐ Vegetation Lined Ditches
	☐ Stone Outlet Sediment Traps	☐ Sand Filter Systems
	☐ Sediment Basins	

III. CULTURAL RESOURCES

Refer to TxDOT Standard Specifications in the event historical issues or archeological artifacts are found during construction. Upon discovery of archeological artifacts (bones, burnt rock, flint, pottery, etc.) cease work in the immediate area and contact the Engineer immediately.

☒ No Action Required ☐ Required Action

Action No.

1.

2.

3.

4.

IV. VEGETATION RESOURCES

Preserve native vegetation to the extent practical.

☒ No Action Required ☐ Required Action

Action No.

1.

2.

3.

4.

V. FEDERAL LISTED, PROPOSED THREATENED, ENDANGERED SPECIES, CRITICAL HABITAT, STATE LISTED SPECIES, CANDIDATE SPECIES AND MIGRATORY BIRDS.

☒ No Action Required ☐ Required Action

Action No.

1.

2.

3.

4.

If any of the listed species are observed, cease work in the immediate area, do not disturb species or habitat and contact the Engineer immediately. The work may not remove active nests from bridges and other structures during nesting season of the birds associated with the nests. If caves or sinkholes are discovered, cease work in the immediate area, and contact the Engineer immediately.

LIST OF ABBREVIATIONS

BMP:	Best Management Practice	SPCC:	Spill Prevention Control and Countermeasure
CGP:	Construction General Permit	SW3P:	Storm Water Pollution Prevention Plan
DSHS:	Texas Department of State Health Services	PCN:	Pre-Construction Notification
FHWA:	Federal Highway Administration	PSL:	Project Specific Location
MOA:	Memorandum of Agreement	TCEQ:	Texas Commission on Environmental Quality
MOU:	Memorandum of Understanding	TPDES:	Texas Pollutant Discharge Elimination System
MS4:	Municipal Separate Stormwater Sewer System	TPWD:	Texas Parks and Wildlife Department
MBTA:	Migratory Bird Treaty Act	TxDOT:	Texas Department of Transportation
NOT:	Notice of Termination	T&E:	Threatened and Endangered Species
NWP:	Nationwide Permit	USACE:	U.S. Army Corps of Engineers
NOI:	Notice of Intent	USFWS:	U.S. Fish and Wildlife Service

VI. HAZARDOUS MATERIALS OR CONTAMINATION ISSUES

General (applies to all projects):

Comply with the Hazard Communication Act (the Act) for personnel who will be working with hazardous materials by conducting safety meetings prior to beginning construction and making workers aware of potential hazards in the workplace. Ensure that all workers are provided with personal protective equipment appropriate for any hazardous materials used.

Obtain and keep on-site Material Safety Data Sheets (MSDS) for all hazardous products used on the project, which may include, but are not limited to the following categories: Paints, acids, solvents, asphalt products, chemical additives, fuels and concrete curing compounds or additives. Provide protected storage, off bare ground and covered, for products which may be hazardous. Maintain product labelling as required by the Act.

Maintain an adequate supply of on-site spill response materials, as indicated in the MSDS. In the event of a spill, take actions to mitigate the spill as indicated in the MSDS, in accordance with safe work practices, and contact the District Spill Coordinator immediately. The Contractor shall be responsible for the proper containment and cleanup of all product spills.

Contact the Engineer if any of the following are detected:

- Dead or distressed vegetation (not identified as normal)
- Trash piles, drums, canister, barrels, etc.
- Undesirable smells or odors
- Evidence of leaching or seepage of substances

Does the project involve any bridge class structure rehabilitation or replacements (bridge class structures not including box culverts)?

☐ Yes ☒ No

If "No", then no further action is required.
If "Yes", then TxDOT is responsible for completing asbestos assessment/inspection.

Are the results of the asbestos inspection positive (is asbestos present)?

☐ Yes ☒ No

If "Yes", then TxDOT must retain a DSHS licensed asbestos consultant to assist with the notification, develop abatement/mitigation procedures, and perform management activities as necessary. The notification form to DSHS must be postmarked at least 15 working days prior to scheduled demolition.

If "No", then TxDOT is still required to notify DSHS 15 working days prior to any scheduled demolition.

In either case, the Contractor is responsible for providing the date(s) for abatement activities and/or demolition with careful coordination between the Engineer and asbestos consultant in order to minimize construction delays and subsequent claims.

Any other evidence indicating possible hazardous materials or contamination discovered on site. Hazardous Materials or Contamination Issues Specific to this Project:

☒ No Action Required ☐ Required Action

Action No.

1.

2.

3.

VII. OTHER ENVIRONMENTAL ISSUES

(includes regional issues such as Edwards Aquifer District, etc.)

☒ No Action Required ☐ Required Action

Action No.

1.

2.

3.

STATE OF TEXAS
MASHELL L. DANIEL
108544
LICENSED
PROFESSIONAL ENGINEER
Mashell Daniel
4/22/2014

Texas Department of Transportation — Design Division Standard

ENVIRONMENTAL PERMITS, ISSUES AND COMMITMENTS

EPIC

FILE: epic.dgn	DN: TxDOT	CK: AM	DW: VP	CK: AR
©TxDOT January 2012	CONT	SECT	JOB	HIGHWAY
REVISIONS 12-12-2011 (DS)	DIST		COUNTY	SHEET NO.

REVISION | DATE

CITY OF TEXARKANA, TEXAS
220 Texas Blvd., Texarkana, Texas 75501 903-798-3948

PROJECT: STEP
DATE: Apr 22, 2014
DESIGNED BY: NLD
DRAWN BY: NLD
CHECKED BY: BKD
APPROVED BY: BKD

EPIC

STEP PROJECT
Dept. of Engineering & Infrastructure
City of Texarkana, Texas

DRAWING

DATE:
FILE:

Attachment: Exhibit 'B-3' STEP II Sheet 48-67 (1124 : Res No. 2014 - 067 R STEP Project II Downtown Sidewalk Enhancements DPW 14 - 02)

AREA 4
DATE DISTURBED: _____
DATE STABILIZED: _____

A 4
DATE INSTALLED: _____
DATE REMOVED: _____

Scale: 1"=20'

AREA 1
DATE DISTURBED: _____
DATE STABILIZED: _____

A1
DATE INSTALLED: _____
DATE REMOVED: _____

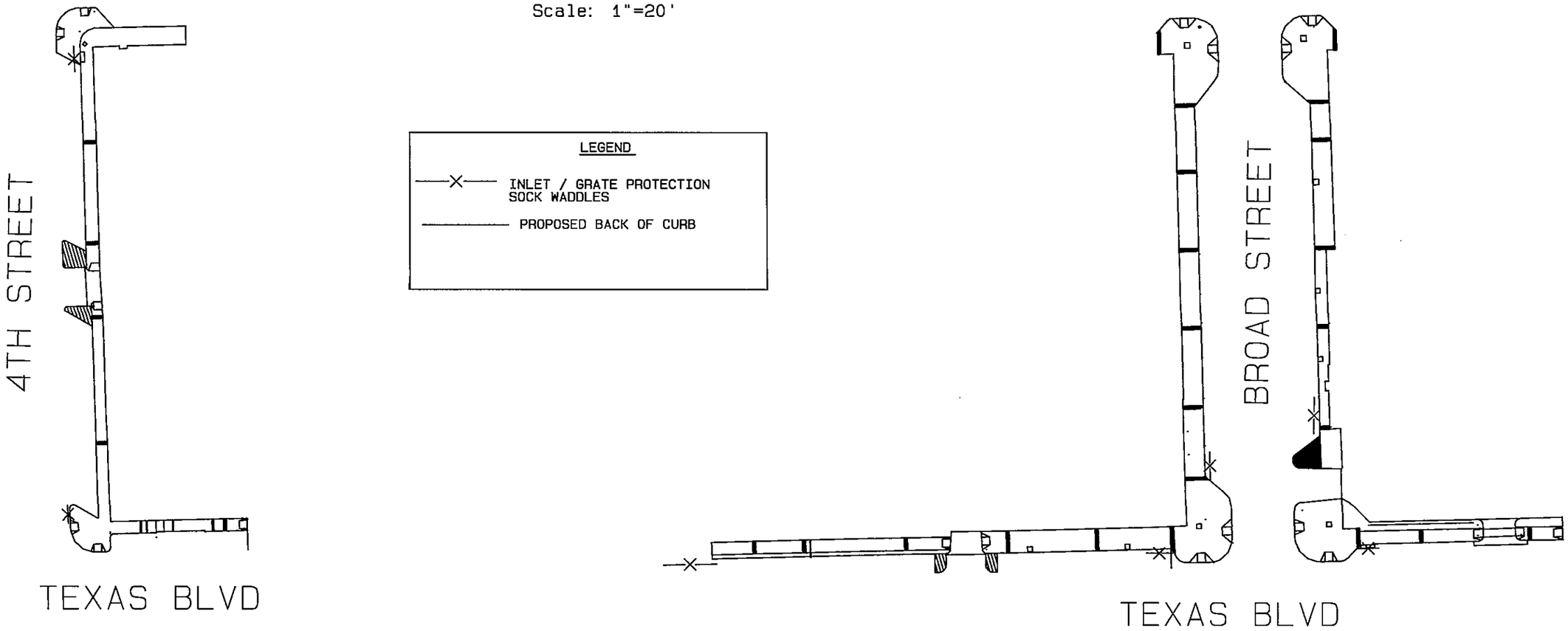

LEGEND

—X— INLET / GRATE PROTECTION SOCK WADDLES

——— PROPOSED BACK OF CURB

INLET PROTECTION/ SOCK WADDLES ARE TO BE INSTALLED AT EVERY GRATE OR INLET.

AREA 3
DATE DISTURBED: _____
DATE STABILIZED: _____

A3
DATE INSTALLED: _____
DATE REMOVED: _____

AREA 2
DATE DISTURBED: _____
DATE STABILIZED: _____

A2
DATE INSTALLED: _____
DATE REMOVED: _____

REVISION | DATE

CITY OF TEXARKANA, TEXAS
220 Texas Blvd., Texarkana, Texas 75501 903-798-3948

PROJECT: STEP
DATE: APR 22, 2014
DESIGNED BY: MLD
DRAWN BY: MLD
CHECKED BY: BWD
APPROVED BY: BWD

SWP3 PLAN

STEP PROJECT
Dept. of Engineering & Infrastructure
City of Texarkana, Texas

DRAWING

Attachment: Exhibit 'B-3' STEP II Sheet 48-67 (1124 : Res No. 2014 - 067 R STEP Project II Downtown Sidewalk Enhancements DPW 14 - 02)

SITE DESCRIPTION

PROJECT LIMITS: From: Texas Blvd. & South of West Broad Street
To: Texas Blvd. & West 4th Street
From: West Broad Street & North State Line Ave
To: West 4th Street

PROJECT DESCRIPTION: Construction of new sidewalks and pedestrian ammenities.

MAJOR SOIL DISTURBING ACTIVITIES: SOIL DISTURBING ACTIVITIES WILL INCLUDE Removing and replacing concrete sidewalks and grass areas.

TOTAL PROJECT AREA: 0.42 Acres.

TOTAL AREA TO BE DISTURBED: 0.42 Acres.

WEIGHTED RUNOFF COEFFICIENT
(AFTER CONSTRUCTION): SAME AS BEFORE

EXISTING CONDITION OF SOIL & VEGETATIVE
COVER AND % OF EXISTING VEGETATIVE COVER: THE EXISTING SOIL IS COVERED 95% WITH CONCRETE. THE REMAINING 5% IS MIXED GRASSES IN GOOD CONDITION.

NAME OF RECEIVING WATERS: STORM DRAINS WILL CARRY THE RUNOFF FROM THIS PROJECT TO DAYS CREEK. THE SEGMENT # FOR DAYS CREEK IS # 0304.

STATE OF TEXAS
MICHELL L. DANIEL
108544
REGISTERED
PROFESSIONAL ENGINEER

EROSION AND SEDIMENT CONTROLS

SOIL STABILIZATION PRACTICES:

___ TEMPORARY SEEDING
X PERMANENT PLANTING, SODDING, OR SEEDING
___ MULCHING
___ SOIL RETENTION BLANKET
___ BUFFER ZONES
___ PRESERVATION OF NATURAL RESOURCES

OTHER: DISTURBED AREAS ON WHICH CONSTRUCTION ACTIVITY HAS CEASED (TEMPORARILY OR PERMANENTLY) SHALL BE STABILIZED WITHIN 14 DAYS UNLESS ACTIVITIES ARE SCHEDULED TO RESUME WITHIN 21 DAYS.

STRUCTURAL PRACTICES:

___ SILT FENCES
___ HAY BALES
___ ROCK BERMS
___ DIVERSION, INTERCEPTOR, OR PERIMETER DIKES
___ DIVERSION, INTERCEPTOR, OR PERIMETER SWALES
___ DIVERSION DIKE AND SWALE COMBINATIONS
___ PIPE SLOPE DRAINS
___ PAVED FLUMES
___ ROCK BEDDING AT CONSTRUCTION EXIT
___ TIMBER MATTING AT CONSTRUCTION EXIT
___ CHANNEL LINERS
___ SEDIMENT TRAPS
___ SEDIMENT BASINS
X STORM INLET SEDIMENT TRAP
___ FILTER DAMS
X CURBS AND GUTTERS
___ STORM SEWERS
___ VELOCITY CONTROL DEVICES

OTHER:

NARRATIVE - SEQUENCE OF CONSTRUCTION (STORM WATER MANAGEMENT) ACTIVITIES:

THE ORDER OF ACTIVITIES WILL BE AS FOLLOWS:

1) INSTALL PERIMETER CONTOLS INCLUDING SEDIMENT TRAPS IN INLETS.
2) PLACE PERMENANT SOD AS EARHWORK AND LANDSCAPING ARE COMPLETED IN EACH PHASE OF SIDEWALK CONSTRUCTION.
3) PLACE CONCRETE SIDEWALK.
4) COMPLETE ALL OTHER WORK.
5) WHEN ALL CONSTRUCTION ACTIVITIES ARE COMPLETED AND THE SITE IS STABILIZED AND APPROVED BY THE ENGINEER, REMOVE TEMPORARY STRUCTURAL CONTROLS AND RESEED ANY AREAS DISTURBED BY THEIR REMOVAL.

STORM WATER MANAGEMENT: STORM WATER DRAINAGE FROM THIS PROJECT WILL BE PROVIDED BY STORM SEWER.

OTHER EROSION AND SEDIMENT CONTROLS:

MAINTENANCE: ALL EROSION AND SEDIMENT CONTROLS WILL BE MAINTAINED IN GOOD WORKING ORDER. IF A REPAIR IS NECESSARY, IT WILL BE DONE AT THE EARLIEST DATE POSSIBLE BUT NO LATER THAN 7 CALENDAR DAYS AFTER THE SURROUNDING EXPOSED GROUND HAS DRIED SUFFICIENTLY TO PREVENT FURTHER DAMAGE FROM HEAVY EQUIPMENT.

INSPECTION: AN INSPECTION WILL BE PERFORMED BY A CITY INSPECTOR EVERY WEEK AS WELL AS AFTER EVERY HALF INCH OR MORE OF RAIN. AN INSPECTION AND MAINTENANCE REPORT WILL BE MADE PER EACH INSPECTION. BASED ON THE INSPECTION RESULTS, THE CONTROLS SHALL BE REVISED PER THE INSPECTION REPORT.

WASTE MATERIALS: NO CONTRUCTION WASTE MAT'L WILL BE BURIED ON SITE. DISPOSAL OF WASTE MATERIALS SHALL MEET ALL STATE AND LOCAL SOLID WASTE MANAGEMENT REGULATIONS.

X

HAZARDOUS WASTE (INCLUDING SPILL REPORTING): AT A MINIMUM, ANY PRODUCTS IN THE FOLLOWING CATAGORIES ARE CONSIDERED TO BE HAZARDOUS: PAINTS, ACIDS FOR CLEANING MASONRY SURFACES, CLEANING SOLVENTS, ASPHALT PRODUCTS, CHEMICAL ADDITIVES FOR SOIL STABILIZATION, CONCRETE CURING COMPOUNDS AND ADDITIVES OR MOTOR OIL. IN THE EVENT OF A SPILL WHICH MAY BE HAZAROUS, THE DEPARTMENT OF PUBLIC SAFETY SHOULD BE CONTACTED IMMEDIATELY.

SANITARY WASTE: ALL SANITARY WASTE WILL BE DISPOSED OF IN ACCORDANCE WITH ALL STATE AND LOCAL REGULATIONS.

OFFSITE VEHICLE TRACKING:

___ HAUL ROADS DAMPENED FOR DUST CONTROL
___ LOADED HAUL TRUCKS TO BE COVERED WITH TARPAULIN
X EXCESS DIRT ON ROAD REMOVED DAILY
___ STABILIZED CONSTRUCTION ENTRANCE

OTHER:

REMARKS: DISPOSAL AREAS, STOCKPILES, AND HAUL ROADS SHALL BE CONSTRUCTED IN A MANNER THAT WILL MINIMIZE AND CONTROL THE AMOUNT OF SEDIMENT THAT MAY ENTER RECEIVING WATERS. DISPOSAL AREAS SHALL NOT BE LOCATED IN ANY WETLAND, WATERBODY OR STREAMBED.
CONSTRUCTION STAGING AREAS AND VEHICLE MAINTENANCE AREAS SHALL BE CONSTRUCTED BY THE CONTRACTOR IN A MANNER TO MINIMIZE THE RUNOFF OF POLLUTANTS.
ALL WATERWAY'S SHALL BE CLEARED AS SOON AS PRACTICAL OF TEMPORARY BRIDGES, MATTING, FALSEWORK, PILING, DEBRIS OR OTHER OBSTRUCTIONS PLACED DURING CONSTRUCTION OPERATIONS THAT ARE NOT PART OF THE FINISHED WORK.
THE CONTRACTOR WILL BE REQUIRED TO CONTAIN WASH WATER FROM CONCRETE TRUCKS IN A MANNER THAT WILL PREVENT SAME FROM ENTERING ANY WATERWAY.

NOTES: THE CONTRACTOR IS RESPONSIBLE FOR INSURING THAT ALL SUBCONTRACTORS ARE AWARE AND COMPLY WITH ALL COMPONENTS OF THE SW3P.

TxDOT STORM WATER POLLUTION PREVENTION PLAN (SW3P)

FED. RD. DIV. NO.	PROJECT NO.	SHEET NO.
	DPW-03-03	

STATE	DISTRICT	COUNTY
TEXAS	ATL	BOWIE

CONT.	SECT.	JOB	HIGHWAY NO.

REVISION | DATE

CITY OF TEXARKANA, TEXAS
220 Texas Blvd., Texarkana, Texas 75501 903-798-3948

PROJECT: STEP
DATE: Apr 22, 2014
DESIGNED BY: MLD
DRAWN BY: MLD
CHECKED BY: DKO
APPROVED BY: DKO

SW3P

STEP PROJECT
Dept. of Engineering & Infrastructure
City of Texarkana, Texas

DRAWING
SHEET 67

Attachment: Exhibit 'B-3' STEP II Sheet 48-67 (1124 : Res No. 2014 - 067 R STEP Project II Downtown Sidewalk Enhancements DPW 14 - 02)

BID OPENING STEP II DOWNTOWN SIDEWALK ENHANCEMENTS

				JR POPE & CO		TEXARKANA CONST	
Item No.	Description	Quantity	Unit	Unit Price	Extended Amount	UNIT PRICE	EXTENDED AMT
1.	Right of Way Prep	22.5	STA	$3,500.00	$78,750.00	$4,089.00	$92,002.50
2.	Remove Light Pole Foundation	10	EA	$410.00	$4,100.00	$500.00	$5,000.00
3.	Remove Trees	5	EA	$1,000.00	$5,000.00	$2,500.00	$12,500.00
4.	Remove Tree Grates	8	EA	$50.00	$400.00	$100.00	$800.00
5.	Irrigation Lines	70	LF	$5.00	$350.00	$8.00	$560.00
6.	Irrigation Sprinkler Heads	8	EA	$120.00	$960.00	$80.00	$640.00
7.	Sewer Clean Out Adjustment	1	EA	$100.00	$100.00	$650.00	$650.00
8.	Install Concrete Sidewalk	2461	SY	$60.00	$147,660.00	$42.75	$105,207.75
9.	Install Concrete Curb & Gutter	2138.5	LF	$25.00	$53,462.50	$17.60	$37,637.60
10.	Install Concrete Driveway	197.7	SY	$60.00	$11,862.00	$48.60	$9,608.22
11.	Install Asphalt Pavement	618	SY	$54.30	$33,557.40	$59.00	$36,462.00
12.	Install Type 1 Curb Ramp	23	EA	$1,000.00	$23,000.00	$1,100.00	$25,300.00
13.	Install Type 8 Curb Ramp	1	EA	$1,000.00	$1,000.00	$2,000.00	$2,000.00
14.	Install Type 7 Curb Ramp	1	EA	$1,000.00	$1,000.00	$1,300.00	$1,300.00
15.	Install Special Ramp (TY A)	1	EA	$1,000.00	$1,000.00	$2,300.00	$2,300.00
16.	Install Special Ramp (TY B)	2	EA	$1,000.00	$2,000.00	$1,700.00	$3,400.00
17.	Install Ramp (Ty C)	1	EA	$1,000.00	$1,000.00	$1,600.00	$1,600.00
18.	Install Handrail (TY A)	54	LF	$40.00	$2,160.00	$136.00	$7,344.00
19.	Install 2" Counduit	1919	LF	$7.11	$13,644.09	$12.00	$23,028.00
20.	Install Light Poles	32	EA	$4,150.00	$132,800.00	$4,757.25	$152,232.00
21.	Install Light Pole Foundation	33	EA	$500.00	$16,500.00	$750.00	$24,750.00
22.	Install Concrete Pavers	77	SY	$100.00	$7,700.00	$140.00	$10,780.00
23.	Install Raised Island	95	SY	$61.22	$5,815.90	$63.00	$5,985.00
24.	Install Sign Sleeve	8	EA	$50.00	$400.00	$20.00	$160.00
25.	Water Meter Adjustments	20	EA	$200.00	$4,000.00	$320.00	$6,400.00
26.	Water Valve Adjustment	5	EA	$200.00	$1,000.00	$320.00	$1,600.00
27.	Fire Hydrant Adjustment	2	EA	$200.00	$400.00	$1,500.00	$3,000.00
28.	Install Tree	11	EA	$250.00	$2,750.00	$212.00	$2,332.00
29.	Install Tree Grate	14	EA	$1,250.00	$17,500.00	$795.00	$11,130.00
30.	Install Slot Drain	46.5	LF	$100.00	$4,650.00	$110.00	$5,115.00
31.	Install Sod	153	SY	$10.00	$1,530.00	$4.55	$696.15
32.	Install Filter Socks	64	LF	$10.00	$640.00	$21.00	$1,344.00
33.	Sawcut Sidewalk	405	LF	$2.00	$810.00	$2.25	$911.25
34.	Traffic Control Plan	8	MO	$1,000.00	$8,000.00	$2,500.00	$20,000.00
35.	Mobilization	1	LS	$60,000.00	$60,000.00	$40,000.00	$40,000.00
				TOTAL =	$645,501.89	TOTAL =	$653,775.47

Attachment: STEP PROJECT II BID TAB (1124 : Res No. 2014 - 067 R STEP Project II Downtown Sidewalk Enhancements DPW 14 - 02)

ADDITIVE ALTERNATE NO. 1

Item No.	Description	Quantity	Unit	J.R. Pope & Co. Unit Price	J.R. Pope & Co. Extended Amount	Texarkana Const. Unit Price	Texarkana Const. Extended Amount
1.	Type 1 Curb Ramp	4	EA	$1,000.00	$4,000.00	$1,800.00	$7,200.00
2.	Concrete Sidewalk	14	SY	$60.00	$840.00	$45.75	$640.50
3.	Concrete Driveway	41	SY	$60.00	$2,460.00	$50.60	$2,074.60
4.	Install Sign Sleeve	6	EA	$50.00	$300.00	$50.00	$300.00
5.	Install Light Pole	1	EA	$4,150.00	$4,150.00	$4,757.25	$4,757.25
6.	Install Light Pole Foundation	1	EA	$500.00	$500.00	$850.00	$850.00
7.	Install Bench	2	EA	$1,800.00	$3,600.00	$1,500.00	$3,000.00
8.	Install Trash Receptacle	1	EA	$1,500.00	$1,500.00	$1,300.00	$1,300.00
9.	Install Planter	2	EA	$1,100.00	$2,200.00	$500.00	$1,000.00
				TOTAL =	$19,550.00	TOTAL =	$21,122.35

Attachment: STEP PROJECT II BID TAB (1124 : Res No. 2014 - 067 R STEP Project II Downtown Sidewalk Enhancements DPW 14 - 02)

ADDITIVE ALTERNATE NO. 2

(Locations to be field determined.)

Item No.	Description	Quantity	Unit	JR Pope & Co. Unit Price	JR Pope & Co. Extended Amount	Texarkana Construction Unit Price	Texarkana Construction Extended Amount
1.	Install Bench	6	EA	$1,800.00	$10,800.00	$1,500.00	$9,000.00
2.	Install Trash Receptacle	6	EA	$1,500.00	$9,000.00	$1,300.00	$7,800.00
3.	Install Planter	3	EA	$1,100.00	$3,300.00	$900.00	$2,700.00
4.	Install Bicycle Rack	2	EA	$1,200.00	$2,400.00	$850.00	$1,700.00
				TOTAL =	$25,500.00	TOTAL =	$21,200.00

GRAND TOTAL =	$690,551.89	GRAND TOTAL =	$696,097.82

Attachment: STEP PROJECT II BID TAB (1124 : Res No. 2014 - 067 R STEP Project II Downtown Sidewalk Enhancements DPW 14 - 02)

Attachment: 2014-067 Step II Resolution [Revision 3] (1124 : Res No. 2014 - 067 R STEP Project II Downtown Sidewalk Enhancements DPW

RESOLUTION NO. 2014 - 067

A RESOLUTION OF THE CITY COUNCIL OF THE CITY OF TEXARKANA, TEXAS, ACCEPTING A BID AND AUTHORIZING THE CITY MANAGER TO ENTER INTO A CONTRACT WITH TATUM EXCAVATING COMPANY OF TEXARKANA, TEXAS FOR THE CONSTRUCTION OF PHASE IV TAMU EAST APPROACH IN AN AMOUNT NOT TO EXCEED TWO MILLION THREE HUNDRED TWENTY-FIVE THOUSAND FIVE HUNDRED NINETY-FIVE DOLLARS ($2,325,595.00); AND ESTABLISHING AN EFFECTIVE DATE.

WHEREAS, proposals were opened June 30, 2014, for the construction of STEP II Project – Downtown Sidewalk Enhancements which include new sidewalks, ADA ramps, and lighting improvements in the Downtown area; and

WHEREAS, the bidder with the lowest and best bid was J.R. Pope Company, Inc. of Texarkana, Texas in an amount not to exceed Six Hundred Ninety Thousand, Five Hundred Fifty-One Dollars and Eighty-Nine Cents ($690,551.89); and

WHEREAS, funds are available for this service through the grant match budgeted in the Economic Development Fund.

NOW, THEREFORE, BE IT RESOLVED BY THE CITY COUNCIL OF THE CITY OF TEXARKANA, TEXAS:

SECTION 1: That the bid submitted by J.R. Pope Company, Inc. for the construction of STEP Project II – Downtown Sidewalk Enhancements is hereby accepted.

SECTION 2: That the City Manager be and is hereby authorized to enter into a contract with J.R. Pope Company, Inc. in an amount not to exceed Six Hundred Ninety Thousand, Five Hundred Fifty-One Dollars and Eighty Nine Cents ($690,551.89)

SECTION 3: That this Resolution shall be in full force and effect from and after its passage and approval.

PASSED AND APPROVED in Regular Council Session on this the 28th day of July, 2014.

ATTEST:

_____ _____

JENNIFER EVANS, CITY SECRETARY BOB BRUGGEMAN, MAYOR

City of Texarkana, Texas

Version: A

Briefing Sheet

Update Date: 7/5/2014 1:31 PM

Lead Department: City Manager **Action Officer:** Pam Burns, Municipal Clerk

Subject: Uninsured/Underinsured Motorists

Updates/History of Briefing:

Executive Summary and Background Information:

Potential Options:

Fiscal Implications:

Staff Recommendation:

Advisory Board/Committee Review:

Board/Committee Recommendation:

Advisory Board/Committee Meeting Date and Minutes:

Attachments

a. Uninsured/Under Insured Motorists (PDF)

6/24/14 8:37 AM

TEXARKANA, TEXAS CITY COUNCIL DISCUSSION TOPICS SCHEDULE

Topic	Sponsor	Date Added	Scheduled Discussion	Discussion Notes	Disposition	Staff Lead
Uninsured/Under Insured Motorists	Bruggeman	23-Jun-14	14-Jul-14	Texarkana resident Susan Moss spoke at the 9 and 23 June council meetings concerned about a number of matters related to her neighborhood. One matter is related to the action taken in Dallas that permits the Dallas police department to tow vehicles whose owners/operators are discovered to be uninsured or under insured. During the 23 JUN meeting the city council requested the topic be added to the discussion schedule.	Staffing	Shiner
Marking of Handicapped Only Parking throughout the city	Bruggeman	1-Jul-13	12-May-14	There is a concern that the general population does not understand or respect Handicapped Only Parking designations. A contributing factor may be that the designated parking spots are not properly marked with signage (versus pavement only markings) that state the amount of the fine for being cited for violating the parking designation. Maybe the city needs to adopt an enforceable ordinance putting more teeth into the designation and the enforcement thereof. **(12 MAY 14)** Mayor Bruggeman opened the discussion reporting that a citizen contacted him concerned about unpermitted vehicles parking in Handicapped Only parking and that he would like the staff to research the matter extensively and prepare a report back to the city council. He also stated that if warranted the city staff should recommend an ordinance that would strengthen the city's ability to enforce the proper marking of Handicapped Only parking and the effective enforcement thereof. Staff will research federal, state, and local laws related to Handicapped Parking and survey the community to estimate the level of compliance with these laws. Based on the results of the research the staff will determine a game plan for meeting the direction of the city council.	Staffing	Shiner
Enforcement of/or Demolition of Red Tagged/Burned Out Buildings	Miller	28-Jan-14	10-Feb-14	The number of red tagged or burned out buildings is not acceptable and the city council should discuss its interest in appropriate enforcement of city ordinances to either bring the buildings up to usable standards or causing owner removal of the structures. Any such buildings that have historical designations might should be restored to their historical appearance and/or use. Of particular interest are the structures known as (1) Pine Street School, (2) McCarthy Hotel, (3) Grimm Hotel, and (4) residential structures such as the one on 40th Street. **(10 FEB 14)** CM Miller lead the council discussion. Councilmembers generally expressed concern about the city's inventory of burned-out and/or delapidated structures. There appears to be two huge problems in that there are commercial type buildings and residential type structures. Clearly the cost to remove or upfit a large commercial type building will be significant. These many structures represent risks to the community's health, safety, and welfare. There is concern that someone will get hurt while traspassing on these properties. Councilmembers stated that they are prepared to stand behind the ordinance regardless of property ownership. Current enforcement procedures were discussed with the council. Council consensus is that staff is to work this situation extensively. Mr. Whitson reported that the staff will finish some of the other previous discussion items and then will move onto this particular item.	Staffing	Lindholm

6/24/14 8:37 AM

TEXARKANA, TEXAS CITY COUNCIL DISCUSSION TOPICS SCHEDULE

Topic	Sponsor	Date Added	Scheduled Discussion	Discussion Notes	Disposition	Staff Lead
Appointments to Boards and Commissions	Matthews	12-Dec-13	14-Oct-13	The manner that citizens are appointed by the City Council to committees, boards, and commissions appear to lack a high level of transparency. **(14 OCT 13)** CM Miller lead the discussion concerning the manner in which citizens are appointed to the various boards, commissions, and committees. He stated that he had discussed the matter with the City Manager and asked that Mr. Whitson share with the city council his experience and thoughts and the matter. Mr. Whitson reported that he has worked in a system that included advertising or noticing the public that certain positions would open for appointment and that citizens interested in serving should provide an application of interest. The process certainly could be automated such that applicants would provide information uniformly and for those citizens who did not apply via the internet could email and application or appear in person wherein a staff person would create the on-line application for the interested party. When it comes times for the city council to appoint the staff could prepare a briefing item permitting a high level of transparency to the public. The City Council, by consensus, directed staff to work toward developing a briefing item for consideration aimed toward improving the transparency of the process. **(27 JAN 14)** Mr. Whitson reported that he and the city secretary have researched creation documents for city commissions, boards, and committees and continue to research similar documents for outside agencies where the city appoints members to their governoring boards. As a first step the staff has redesigned the Excel file used to track membership. The new design will quickly identify any appointment that will expire within 90 days and also further identify by color code any appointments that have expired. The 90-day notice will permit the city secretary to advertise pending vacancies thus seek applications from interested citizens who want to be considered for appointment. Mr. Whitson stated that he is drafting a policy for council consideration that will be intended to improve the transparency of the appointment process. he expects to have a briefing item ready in March, 2014.	Staffing	Whitson
Animal Shelter	Bruggeman	8-Jul-13	26-Aug-13	Currently Texarkana, Texas Animal Control uses the Texarkana, Arkansas Animal Shelter to house animals that cannot be immediately placed with good homes. The use of the Arkansas shelter is on a fee basis. A number of Texas residents have expressed concern with the euthanasia policies of the Arkansas shelter and feel that it is time for Texas to operate its own shelter with policies that meet the desires of Texas residents. **(26 AUG 13)** City Council and staff discussion was led by Council Member Veal-Gooch. In general the staff feels that the current annual cost of in-putting animals at the Texarkana, Arkansas shelter now represents an amount that might support the annual debt service costs of financing related to capital funding of a Texas-side facility. Some residents have registered concern that the Arkansas facility cannot continue to accommodate Texas-side animal shelter requirements, especially if the city council adopts a "no-kill" animal control/shelter policy. Council and staff agreed that staff will continue its research on the matter and develop a project plan for the city council to consider for adoption. The plan is expected to identify the key project development milestones which will extend over a number years from research to ribbon cutting. **(28 OCT 13)** Craig Lindholm reported that the initial research indicates that the annual costs associated with using the Arkansas shelter represents sufficient funding to pay the debt service related to financing the construction of a Texas shelter. Also the staff has researched a number of shelters state-wide seeking a shelter supporting a no-kill policy. Considering the holidays and other activities Mr. Lindholm estimates that a briefing would be coming forward early next calendar year. **(27 JAN 14)** Mr. Lindholm reported that the staff continues to evalute the cost associated with using the Texarkana, Arkansas animal shelter and that the annual costs appear to be escilating. There has been no discussion concerning renewing or updating the current contract between Texarkana, Texas and Texarkana, Arkansas. Staff continues to review plans and designs of recently constructed or soon to be constructed animal shelters in Texas. There is an option, should the city council desire, to have some design firms make presentations to the city council.	Staffing	Lindholm

Attachment: Uninsured/Under Insured Motorists (1146 : Uninsured/Under Insured Motorists)

6/24/14 8:37 AM

TEXARKANA, TEXAS CITY COUNCIL DISCUSSION TOPICS SCHEDULE

Topic	Sponsor	Date Added	Scheduled Discussion	Discussion Notes	Disposition	Staff Lead
Sagging	Casteel	24-Mar-14	28-Apr-14	According to the urbandictionary.com "sagging" is defined as: "wearing ones pants around the hips so that they sag down and bunch up around the ankles. Originally, this was a prison thing that signified that you were another prisoner's property...Somehow this became a 1990's fashion trend." The discussion is likely not about other definitions of "sagging" such as to sink or bend downward by weight or pressure, especially in the middle, to hang down unevenly or to decline, as in price. **(14 APR 14)** CM Casteel started the discussion stating, "I think it is sad when a person goes out into the public and have to look at young boy's and girl's underwear. There should be a law against sagging. I want to ask staff to present an ordinance that will prevent sagging." Other councilmembers agreed that it is certainly inappropriate to be dressed in this manner. After some discussion among councilmembers and staff the city council asked staff to do some more research and report back in discussion at a later date. **(28 APR 14)** City Manager Whitson updated the city council on his continued research into the matter of cities prohibiting the wearing of sagging pants. Whitson reported that he contracted the Texas Municipal League who reported that they had not assisted any Texas city develop a Sagging Pants Ordinance. TMLs reseach confirmed that only some cities in Lousiana including Shreveport and Alexandria have ordinances that prohibit the wearing of sagging pants. Whitson also reported the the police department is concerned that requiring the police department to enforce the ordinance may serve to harm their efforts to have good relationships in certain neighborhoods of the city. After additional discussion by the city council the consenses of the city council was for the staff to present an ordinance for further city council consideration.	Closed	Whitson
Regulation of the sale of E-Cigarettes	Davis	17-Apr-14	24-Feb-14	Councilmember Davis is concerned that minors are able to purchase e-cigarettes from retail outlets in Texarkana, Texas and that maybe the city council should consider prohibiting such sales. **(24 FEB 14)** CM Davis opened the discussion expressing his concern that minors in Texarkana can easily purchase e-cigarettes and related products from various retail establishments in Texarkana. He said that he is concerned that the potential health hazards have not been fully vetted. He displayed a number of sample products that he purchased from a number of retail outlets in Texarkana and reported that he was never asked for an ID. After additional instructions the Mayor determined that the city council by consensus desires that the staff develop and present a city ordinance aimed at prohibiting sales of e-cigarettes to minors in Texarkana.	Closed	Whitson
Homeless Encampment	Miller	23-Jan-14	13-Jan-14	For some time a local business owner has promoted an encampment for homeless individuals at or near his business property. The encampment located at the 200 Block of West Street has garnered some local attention via an internet blog and Facebook. Texarkana City Staff permitted both an electric meter and a water meter that ultimately supported the encampment site. Subsequently, when unauthorized alteration of the water distribution fixture was determined to endanger the public water supply the water meter permit was revoked and the meter removed. The police department has responded to a number of calls for service to the site. The local business owner has recently changed his position concerning the encampment and has asked for the city's assistance in removing the encampment. **(13 JAN 14)** Councilmember Matthews opened the discussion reporting that a number of citizens had contacted him asking what the city was doing to assist the homeless population and especially the homeless residing in the encampment at the 200 Block of West Street, aka the "Jesus Camp". Councilmember Veal-Gooch added that the city has always provided leadership through local not-for-profit service providers and that the staff has worked with these groups to obtain funding to support their efforts. Mr. Craig Lindholme, Director of Redevelopment and Grants Management, recalled for the city council past city efforts directed toward addressing the homeless situation in Texarkana. During the discussion it was pointed out that some individuals choose the homeless lifestyle versus resorting to it as a last resort brought on by circumstances. This group of individuals will not likely respond to efforts to assist them with returning to another way of lifestyle. Everyone recognizes that some individuals are quite willing to work toward achieving independence through education, training, and job seeking. By council consensus there is no further special research or reporting required of the city staff on this matter.	Closed	

Attachment: Uninsured/Under Insured Motorists (1146 : Uninsured/Under Insured Motorists)

6/24/14 8:37 AM

TEXARKANA, TEXAS CITY COUNCIL DISCUSSION TOPICS SCHEDULE

Topic	Sponsor	Date Added	Scheduled Discussion	Discussion Notes	Disposition	Staff Lead
Temporary Tents at Business Locations	Miller	22-Jul-13	9-Sep-13	Maybe it is time for the city to review current policies and practices related to businesses using temporary tentage at their business locations. (9 SEP 13) Mayor Bruggeman opened the discussion with Shirley Jaster providing a review of the current ordinances permitting the use of temporary tents at business locations. Currently businesses may use temporary tents on site up to three times a year with each use limited to 10 days (staff adjusts the counting of days to be delayed until the sales product is placed in the tent thus permitting two to three days of sale preparation to not count against the 10 permitted days). An industry representative spoke on the matter and suggested that businesses might should be permitted a greater frequency of tent usage. City agreed by consensus that the staff should work on reviewing the ordinance requirement and recommend a means that better accommodates the business use of temporary tents. (28 OCT 13) Shirley Jaster reported that the staff has been working on a revision of this regulation and that she is also testing various control measures with customers who are currently seeking permits. Once the test period ends and the staff finalizes a new regulation it will be presented to the Planning and Zoning Board. **(27 JAN 14)** Ms. Jaster reported that a briefing item will be presented at the 24 FEB 14 council meeting proposing changes to the city ordinances that regulate the use of tents at business locations. **(24 FEB 14)** Item was briefed to the city council and is scheduled for public hearing. This item is closed.	Closed	
Red Road Winery	Matthews	22-Jul-13	12-Aug-13	Residents have asked how is it that the Red Road Winery can operate in Texarkana so close to a school? **(12 AUG 13)** CM Matthews led the discussion reporting that a number of residents had contacted him expressing concern about a business being permitted to sell alcohol in close proximity to a school. In response to the concerns he felt that it is important that the city council discuss the matter in an open meeting thus giving the public the opportunity to hear the facts surrounding the situation. State law prohibits alcohol sales within 300 feet of a school and the Red Road Winery store is 360 feet from the nearest school property line. The store is also permitted to sell alcohol for off-premises consumption in accordance with a specific state statute written to promote the sales of Texas produced wines. City Manager Whitson reported that the Texarkana Police Department has not responded to any calls at the winery's address since its opening. He also reported that he discussed with the owners that the law that permits their operation also limits the their methods of advertising wine tastings that they conduct at their store and that the store is in compliance with the law. City staff has reported that the store meets all local zoning ordinances and therefore is permitted to operate at the current location. The store's TABC permits will be renewed periodically and at each renewal opportunity the TABC will evaluate the operation and determine that the store is in full compliance before the permits are renewed. Finally, the city council agreed that the store is legal and no further action is required of the city staff or the city council. This discussion item is closed.	Closed	

Attachment: Uninsured/Under Insured Motorists (1146 : Uninsured/Under Insured Motorists)

6/24/14 8:37 AM

TEXARKANA, TEXAS CITY COUNCIL DISCUSSION TOPICS SCHEDULE

Topic	Sponsor	Date Added	Scheduled Discussion	Discussion Notes	Disposition	Staff Lead
Donation/Collection Bins	Veal-Gooch	22-Jul-13	22-Jul-13	Recently a number of new Donation/Collection Bins have appeared throughout the city. Are the placements regulated by the city? Considering the impact on other opportunities to donate to local charitable entities do we need new or additional regulation? **(22 JUL 13)** CM Veal-Gooch stated that prior to the appearance of the United Way collection bins she observed and discussed the appearance of bins sponsored by a non-profit organization that otherwise had no presence in the community. The recent proliferation of the United Way collection bins caused her to give pause in relation to placement of the bins. During the discussion the city council permitted a number of audience members the opportunity to contribute to the conversation. It was repeated a number of times that organizations such as Samaritan Charities, The Friendship Center and others that certain charitable organizations are currently being harmed the United Way's current contractual arrangement. The consensus of the city council was for staff to work on finding a community solution to the matter and to work closely with Texarkana, Arkansas so that a joint solution may be beneficial to both cities. **(28 OCT 13)** Shirley Jaster reported that Texas and Arkansas staffs have been working on a joint action for this matter. Considering that the proposed ordinances will have to go through each city's Planning and Zoning Boards before being presented to the city council and the board of directors. She estimates that there may be a city council agenda item early in the next calendar year. **(27 JAN 14)** Ms. Jaster reported that she has coordinated with the Arkansas staff and that there is a plan to roll out a proposed ordinance in each jurisdiction simultanously to the respective Planning and Zoning Commissions. It is anticipated that a city council briefing item will be presented at the 10 MAR 14 meeting.	Closed	Jaster
Parking in Yards	Veal-Gooch	3-Jul-13	8-Jul-13	Resident reports multiple-parking of cars in their neighborhood at the corner of 41st and Magnolia. Resident suggests that the city needs an ordinance to prevent this type of parking in residential areas. **(8 JUL 13)** City Council discussed the item mentioning a number of concerns related to an extraordinary number of vehicles parked in yards of residential properties. There is some feeling that the problem may be more related to rental properties versus owner occupied properties. There was consensus of the council that staff should proceed with developing a regulating ordinance for council's deliberation. Council asked how long it might take to develop something for council to consider. Manager Whitson responded that since this will be his first effort as City Manager to work with staff to research the matter and to develop something to present that he would refrain from providing a projected date. **(28 OCT 13)** Shirley Jaster provided an oral report updating the city council on her efforts to prepare a briefing item for consideration. She reported that the staff has researched a number of cities policies and are nearing preparing a recommendation. Shirley reported that she expects to have the item of the City Council agenda in NOV 13. **(27 JAN 14)** Ms. Jaster updated the city council by stating that a briefing item is planned to presented to the city council at the 24 FEB 14 council meeting. The briefing item will be scheduled for the full two-months transparency process permitting ample time for the public to provide input for city council consideration. She also reported that all exiting notes and research on the matter will be compliled into a single PDF file and forwarded in advance to council members permitting individual council members to familiarize themselves with the research at their own pace.	Closed	Jaster

Attachment: Uninsured/Under Insured Motorists (1146 : Uninsured/Under Insured Motorists)